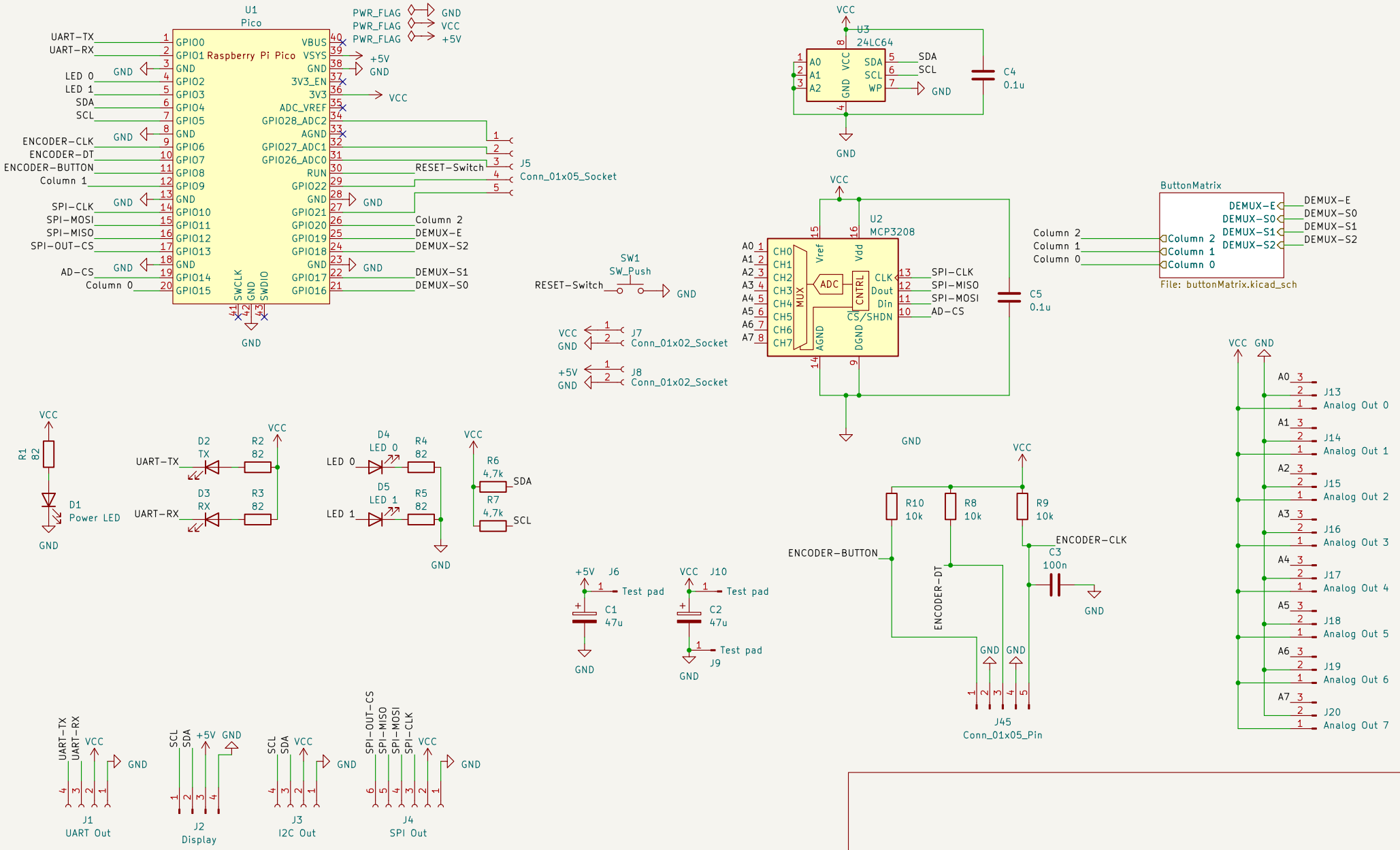

Sheet: /
File: porscheMuehk.kicad_sch

Title: PorscheMühk

Size: A4	Date:	Rev:
KiCad E.D.A. 8.0.2		Id: 1/2

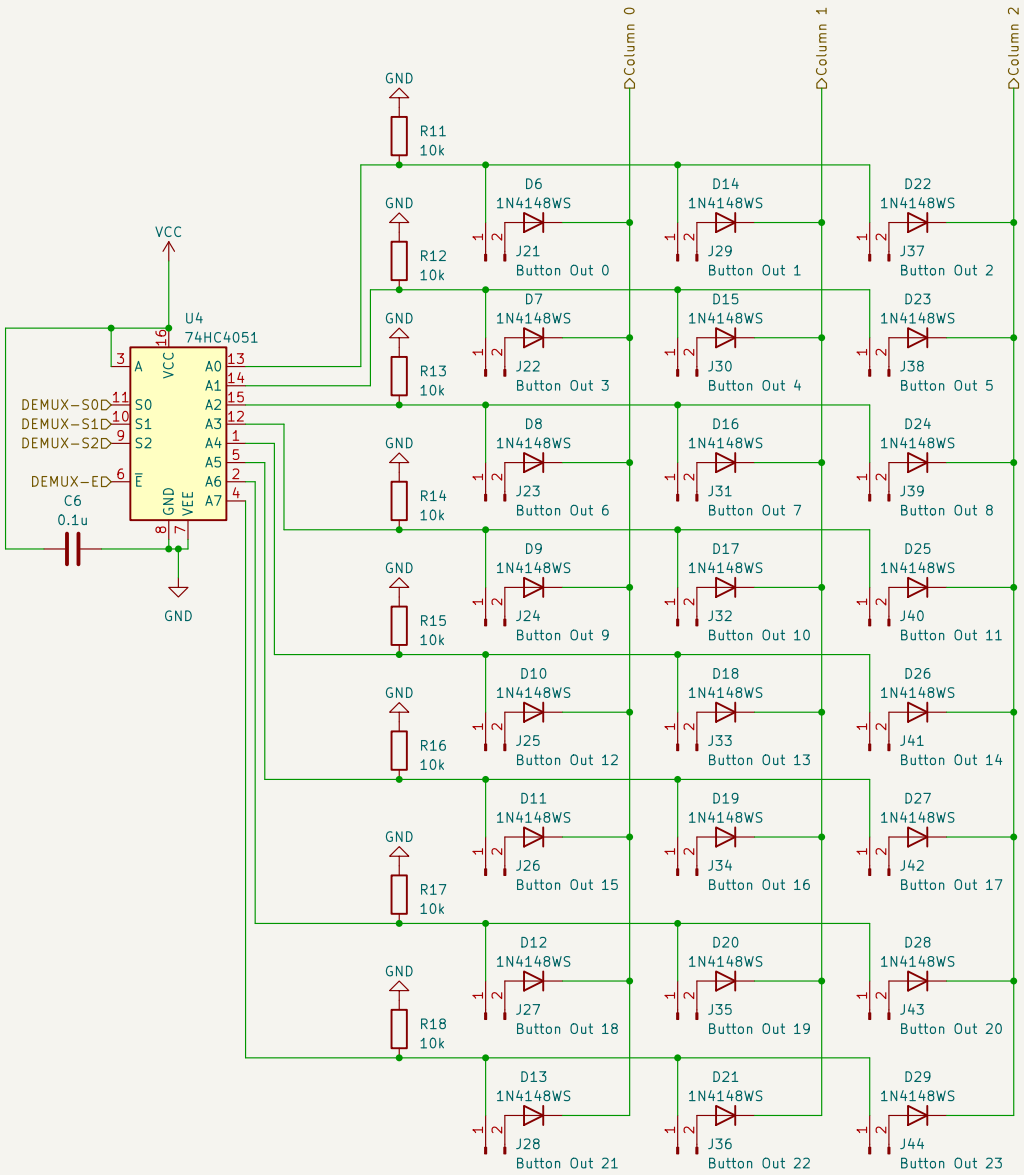

Sheet: /ButtonMatrix/
File: buttonMatrix.kicad_sch

Title: PorscheMühk

Size: A4	Date:	Rev:
KiCad E.D.A. 8.0.2		Id: 2/2