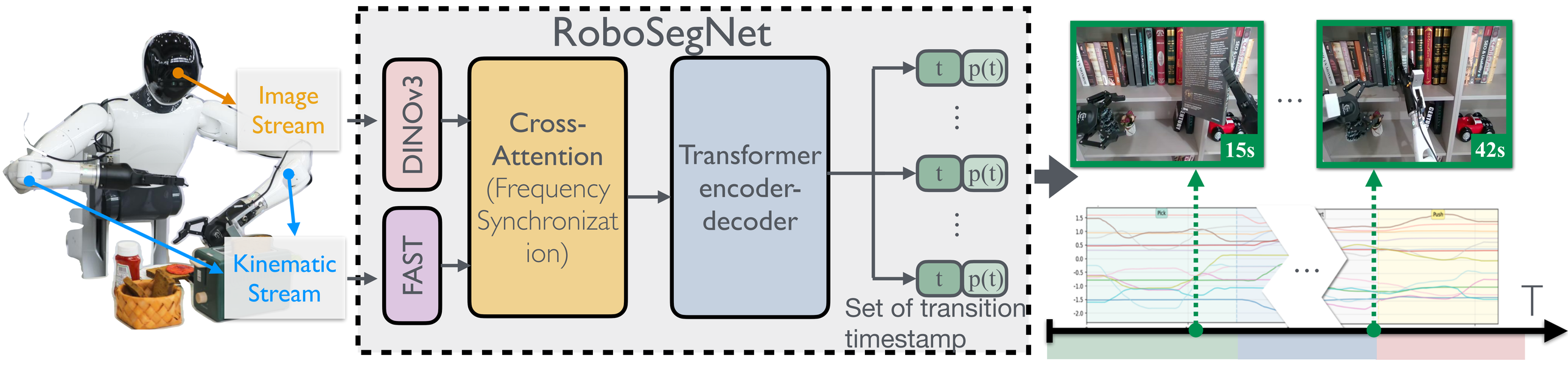
RoboSegNet
Image Stream
Kinematic Stream
DINOv3
FAST
Cross-Attention (Frequency Synchronization)
Transformer encoder-decoder
t
p(t)
Set of transition timestamp
15s
42s
Pick
Push
T