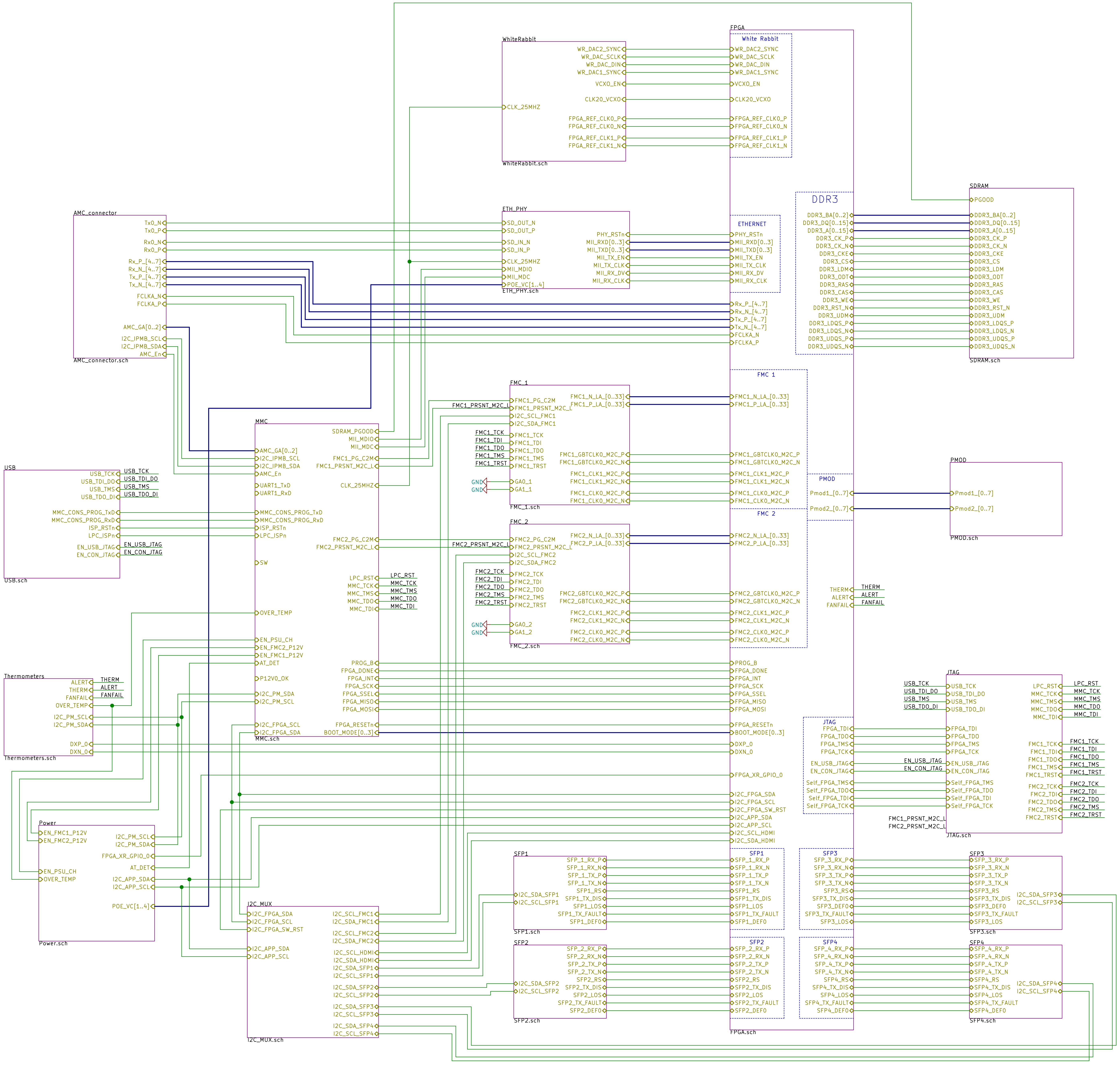
WhiteRabbit
WR_DAC2_SYNC
WR_DAC_SCLK
WR_DAC_DIN
WR_DAC1_SYNC
VCXO_EN
CLK20_VCXO
CLK_25MHZ
FPGA_REF_CLK0_P
FPGA_REF_CLK0_N
FPGA_REF_CLK1_P
FPGA_REF_CLK1_N
WhiteRabbit.sch
FPGA
White Rabbit
ETH_PHY
SD_OUT_N
SD_OUT_P
SD_IN_N
SD_IN_P
MII_MDIO
MII_MDC
POE_VC[1..4]
PHY_RSTn
MII_RXD[0..3]
MII_TXD[0..3]
MII_TX_EN
MII_TX_CLK
MII_RX_DV
MII_RX_CLK
ETH_PHY.sch
ETHERNET
AMC_connector
Tx0_N
Tx0_P
Rx0_N
Rx0_P
Rx_P_[4..7]
Rx_N_[4..7]
Tx_P_[4..7]
Tx_N_[4..7]
FCLKA_N
FCLKA_P
AMC_GA[0..2]
I2C_IPMB_SCL
I2C_IPMB_SDA
AMC_En
AMC_connector.sch
DDR3
DDR3_BA[0..2]
DDR3_DQ[0..15]
DDR3_A[0..15]
DDR3_CK_P
DDR3_CK_N
DDR3_CKE
DDR3_CS
DDR3_LDM
DDR3_ODT
DDR3_RAS
DDR3_CAS
DDR3_WE
DDR3_RST_N
DDR3_UDM
DDR3_LDQS_P
DDR3_LDQS_N
DDR3_UDQS_P
DDR3_UDQS_N
SDRAM
PGOOD
SDRAM.sch
FMC 1
FMC_1
FMC1_PG_C2M
FMC1_PRSNT_M2C_L
I2C_SCL_FMC1
I2C_SDA_FMC1
FMC1_TCK
FMC1_TDI
FMC1_TDO
FMC1_TMS
FMC1_TRST
GA0_1
GA1_1
GND
FMC1_N_LA_[0..33]
FMC1_P_LA_[0..33]
FMC1_GBTCLK0_M2C_P
FMC1_GBTCLK0_M2C_N
FMC1_CLK1_M2C_P
FMC1_CLK1_M2C_N
FMC1_CLK0_M2C_P
FMC1_CLK0_M2C_N
FMC_1.sch
PMOD
Pmod1_[0..7]
Pmod2_[0..7]
PMOD.sch
FMC 2
FMC_2
FMC2_PG_C2M
FMC2_PRSNT_M2C_L
I2C_SCL_FMC2
I2C_SDA_FMC2
FMC2_TCK
FMC2_TDI
FMC2_TDO
FMC2_TMS
FMC2_TRST
GA0_2
GA1_2
FMC2_N_LA_[0..33]
FMC2_P_LA_[0..33]
FMC2_GBTCLK0_M2C_P
FMC2_GBTCLK0_M2C_N
FMC2_CLK1_M2C_P
FMC2_CLK1_M2C_N
FMC2_CLK0_M2C_P
FMC2_CLK0_M2C_N
FMC_2.sch
THERM
ALERT
FANFAIL
MMC
SDRAM_PGOOD
MII_MDIO
MII_MDC
AMC_GA[0..2]
I2C_IPMB_SCL
I2C_IPMB_SDA
AMC_En
FMC1_PG_C2M
FMC1_PRSNT_M2C_L
UART1_TxD
UART1_RxD
CLK_25MHZ
MMC_CONS_PROG_TxD
MMC_CONS_PROG_RxD
ISP_RSTn
LPC_ISPn
FMC2_PG_C2M
FMC2_PRSNT_M2C_L
SW
LPC_RST
MMC_TCK
MMC_TMS
MMC_TDO
MMC_TDI
OVER_TEMP
EN_PSU_CH
EN_FMC2_P12V
EN_FMC1_P12V
AT_DET
P12V0_OK
PROG_B
FPGA_DONE
FPGA_INIT
FPGA_SCK
FPGA_SSEL
FPGA_MISO
FPGA_MOSI
I2C_PM_SDA
I2C_PM_SCL
I2C_FPGA_SCL
I2C_FPGA_SDA
FPGA_RESETn
BOOT_MODE[0..3]
MMC.sch
USB
USB_TCK
USB_TDI_DO
USB_TMS
USB_TDO_DI
EN_USB_JTAG
EN_CON_JTAG
USB.sch
Thermometers
ALERT
THERM
FANFAIL
OVER_TEMP
I2C_PM_SCL
I2C_PM_SDA
DXP_0
DXN_0
Thermometers.sch
FPGA_XR_GPIO_0
I2C_FPGA_SDA
I2C_FPGA_SCL
I2C_FPGA_SW_RST
I2C_APP_SDA
I2C_APP_SCL
I2C_SCL_HDMI
I2C_SDA_HDMI
JTAG
FPGA_TDI
FPGA_TDO
FPGA_TMS
FPGA_TCK
Self_FPGA_TMS
Self_FPGA_TDO
Self_FPGA_TDI
Self_FPGA_TCK
FMC1_PRSNT_M2C_L
FMC2_PRSNT_M2C_L
JTAG.sch
Power
EN_FMC1_P12V
EN_FMC2_P12V
EN_PSU_CH
OVER_TEMP
I2C_PM_SCL
I2C_PM_SDA
FPGA_XR_GPIO_0
AT_DET
I2C_APP_SDA
I2C_APP_SCL
POE_VC[1..4]
Power.sch
I2C_MUX
I2C_FPGA_SDA
I2C_FPGA_SCL
I2C_FPGA_SW_RST
I2C_APP_SDA
I2C_APP_SCL
I2C_SCL_FMC1
I2C_SDA_FMC1
I2C_SCL_FMC2
I2C_SDA_FMC2
I2C_SCL_HDMI
I2C_SDA_HDMI
I2C_SDA_SFP1
I2C_SCL_SFP1
I2C_SDA_SFP2
I2C_SCL_SFP2
I2C_SDA_SFP3
I2C_SCL_SFP3
I2C_SDA_SFP4
I2C_SCL_SFP4
I2C_MUX.sch
SFP1
SFP_1_RX_P
SFP_1_RX_N
SFP_1_TX_P
SFP_1_TX_N
SFP1_RS
SFP1_TX_DIS
SFP1_LOS
SFP1_TX_FAULT
SFP1_DEF0
SFP1.sch
SFP2
SFP_2_RX_P
SFP_2_RX_N
SFP_2_TX_P
SFP_2_TX_N
SFP2_RS
SFP2_TX_DIS
SFP2_LOS
SFP2_TX_FAULT
SFP2_DEF0
SFP2.sch
SFP3
SFP_3_RX_P
SFP_3_RX_N
SFP_3_TX_P
SFP_3_TX_N
SFP3_RS
SFP3_TX_DIS
SFP3_DEF0
SFP3_TX_FAULT
SFP3_LOS
SFP3.sch
SFP4
SFP_4_RX_P
SFP_4_RX_N
SFP_4_TX_P
SFP_4_TX_N
SFP4_RS
SFP4_TX_DIS
SFP4_LOS
SFP4_TX_FAULT
SFP4_DEF0
SFP4.sch
FPGA.sch
1
2
3
4
5
6
7
8
9
10
11
A
B
C
D
E
F
G
H

Michał Gąska / WUT

Sheet: /
File: AMC_FMC_Carrier-PcbDoc.sch

Title: Simple AFC

Size: A2
Date: 2019-01-16
Rev: 9
KiCad E.D.A. kicad (6.0.0-rc1-dev-577-ge0316af69)
Id: 1/25

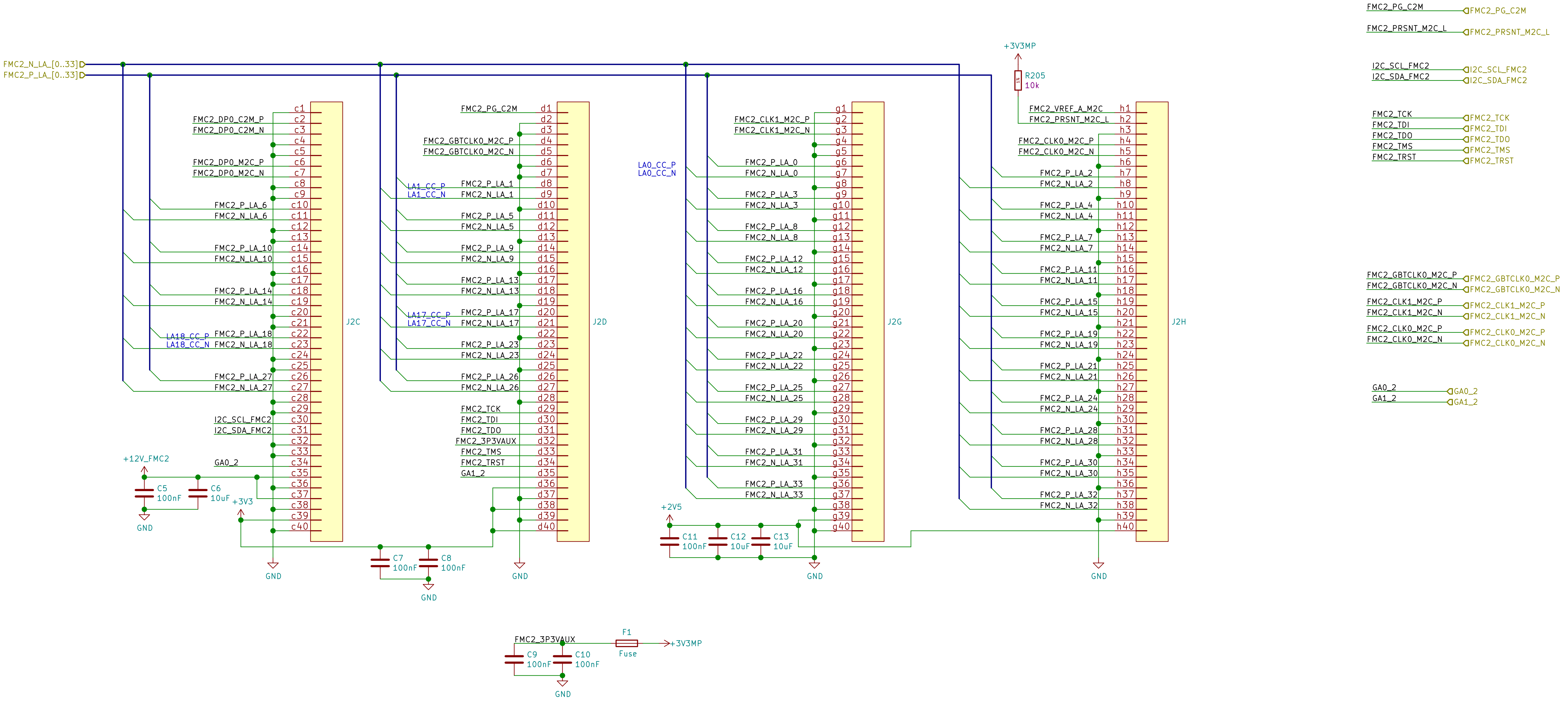
FMC2_N_LA_[0..33]
FMC2_P_LA_[0..33]
FMC2_PG_C2M
FMC2_PRSNT_M2C_L
I2C_SCL_FMC2
I2C_SDA_FMC2
FMC2_TCK
FMC2_TDI
FMC2_TDO
FMC2_TMS
FMC2_TRST
FMC2_GBTCLK0_M2C_P
FMC2_GBTCLK0_M2C_N
FMC2_CLK1_M2C_P
FMC2_CLK1_M2C_N
FMC2_CLK0_M2C_P
FMC2_CLK0_M2C_N
GA0_2
GA1_2
J2C
J2D
J2G
J2H
+3V3MP
R205
10k
FMC2_VREF_A_M2C
FMC2_DP0_C2M_P
FMC2_DP0_C2M_N
FMC2_DP0_M2C_P
FMC2_DP0_M2C_N
FMC2_3P3VAUX
LA18_CC_P
LA18_CC_N
LA1_CC_P
LA1_CC_N
LA17_CC_P
LA17_CC_N
LA0_CC_P
LA0_CC_N
+12V_FMC2
+3V3
+2V5
C5
100nF
C6
10uF
C7
100nF
C8
100nF
C9
100nF
C10
100nF
C11
100nF
C12
10uF
C13
10uF
F1
Fuse
GND

Michał Gąska / WUT
Sheet: /FMC_2/
File: FMC_2.sch

Title: Simple AFC

Size: A3	Date: 2019-01-16	Rev: 9
KiCad E.D.A. kicad (6.0.0-rc1-dev-577-ge0316af69)		Id: 2/25

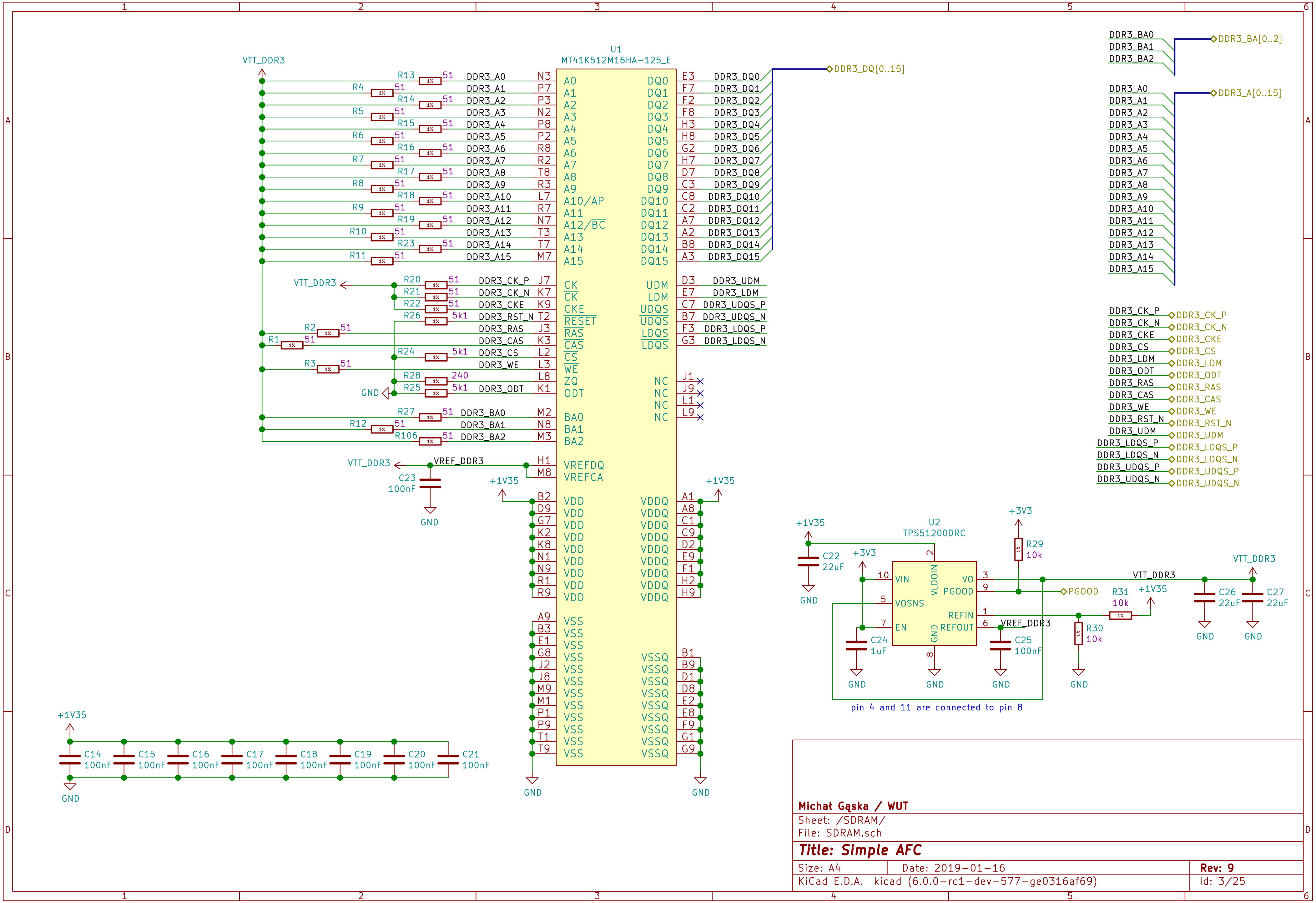
U1
MT41K512M16HA-125_E
VTT_DDR3
R13 51 DDR3_A0 N3 A0
R4 51 DDR3_A1 P7 A1
R14 51 DDR3_A2 P3 A2
R5 51 DDR3_A3 N2 A3
R15 51 DDR3_A4 P8 A4
R6 51 DDR3_A5 P2 A5
R16 51 DDR3_A6 R8 A6
R7 51 DDR3_A7 R2 A7
R17 51 DDR3_A8 T8 A8
R8 51 DDR3_A9 R3 A9
R18 51 DDR3_A10 L7 A10/AP
R9 51 DDR3_A11 R7 A11
R19 51 DDR3_A12 N7 A12/BC
R10 51 DDR3_A13 T3 A13
R23 51 DDR3_A14 T7 A14
R11 51 DDR3_A15 M7 A15
R20 51 DDR3_CK_P J7 CK
R21 51 DDR3_CK_N K7 CK
R22 51 DDR3_CKE K9 CKE
R26 5k1 DDR3_RST_N T2 RESET
R2 51 DDR3_RAS J3 RAS
R1 51 DDR3_CAS K3 CAS
R24 5k1 DDR3_CS L2 CS
R3 51 DDR3_WE L3 WE
R28 240 L8 ZQ
R25 5k1 DDR3_ODT K1 ODT
GND
R27 51 DDR3_BA0 M2 BA0
R12 51 DDR3_BA1 N8 BA1
R106 51 DDR3_BA2 M3 BA2
1%
VTT_DDR3 VREF_DDR3 H1 VREFDQ M8 VREFCA
C23 100nF GND
+1V35
B2 D9 G7 K2 K8 N1 N9 R1 R9 VDD
A9 B3 E1 G8 J2 J8 M9 M1 P1 P9 T1 T9 VSS
GND
E3 DQ0 DDR3_DQ0
F7 DQ1 DDR3_DQ1
F2 DQ2 DDR3_DQ2
F8 DQ3 DDR3_DQ3
H3 DQ4 DDR3_DQ4
H8 DQ5 DDR3_DQ5
G2 DQ6 DDR3_DQ6
H7 DQ7 DDR3_DQ7
D7 DQ8 DDR3_DQ8
C3 DQ9 DDR3_DQ9
C8 DQ10 DDR3_DQ10
C2 DQ11 DDR3_DQ11
A7 DQ12 DDR3_DQ12
A2 DQ13 DDR3_DQ13
B8 DQ14 DDR3_DQ14
A3 DQ15 DDR3_DQ15
DDR3_DQ[0..15]
D3 UDM DDR3_UDM
E7 LDM DDR3_LDM
C7 UDQS DDR3_UDQS_P
B7 UDQS DDR3_UDQS_N
F3 LDQS DDR3_LDQS_P
G3 LDQS DDR3_LDQS_N
J1 J9 L1 L9 NC
+1V35
A1 A8 C1 C9 D2 E9 F1 H2 H9 VDDQ
B1 B9 D1 D8 E2 E8 F9 G1 G9 VSSQ
GND
DDR3_BA0 DDR3_BA1 DDR3_BA2 DDR3_BA[0..2]
DDR3_A0 … DDR3_A15 DDR3_A[0..15]
DDR3_CK_P DDR3_CK_N DDR3_CKE DDR3_CS DDR3_LDM DDR3_ODT DDR3_RAS DDR3_CAS DDR3_WE DDR3_RST_N DDR3_UDM DDR3_LDQS_P DDR3_LDQS_N DDR3_UDQS_P DDR3_UDQS_N
U2
TPS51200DRC
+1V35 C22 22uF GND
+3V3 10 VIN 5 VOSNS 7 EN
2 VLDOIN 8 GND
3 VO 9 PGOOD 1 REFIN 6 REFOUT
C24 1uF GND
GND
C25 100nF GND
+3V3 R29 10k PGOOD
VTT_DDR3 VREF_DDR3
R31 10k +1V35
R30 10k GND
VTT_DDR3 C26 22uF C27 22uF GND GND
pin 4 and 11 are connected to pin 8
+1V35
C14 100nF C15 100nF C16 100nF C17 100nF C18 100nF C19 100nF C20 100nF C21 100nF
GND
1 2 3 4 5 6
A B C D

Michał Gąska / WUT

Sheet: /SDRAM/
File: SDRAM.sch

Title: Simple AFC

Size: A4 Date: 2019-01-16 **Rev: 9**
KiCad E.D.A. kicad (6.0.0-rc1-dev-577-ge0316af69) Id: 3/25

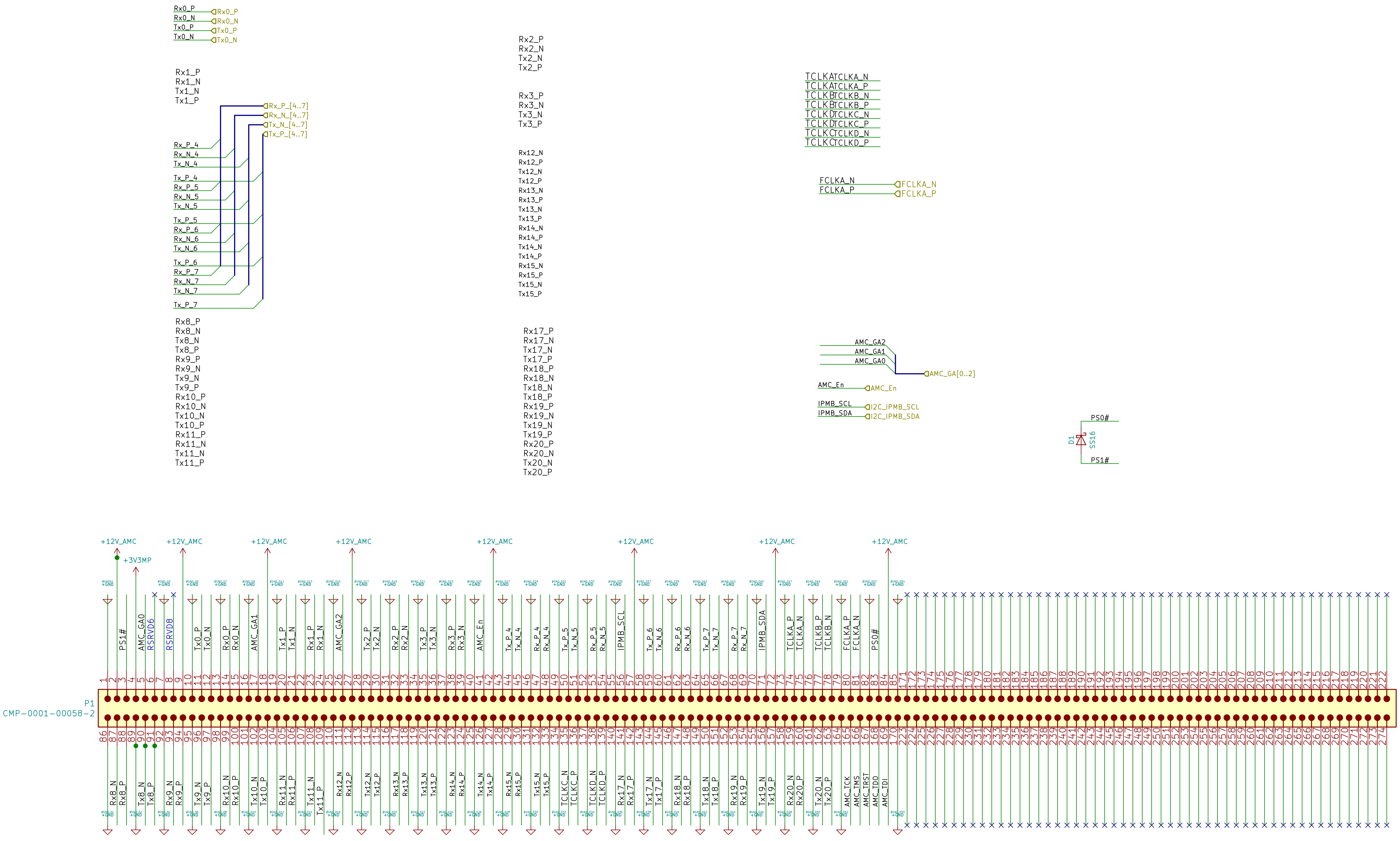
Rx0_P
Rx0_N
Tx0_P
Tx0_N
Rx1_P
Rx1_N
Tx1_N
Tx1_P
Rx_P_[4..7]
Rx_N_[4..7]
Tx_N_[4..7]
Tx_P_[4..7]
Rx_P_4
Rx_N_4
Tx_N_4
Tx_P_4
Rx_P_5
Rx_N_5
Tx_N_5
Tx_P_5
Rx_P_6
Rx_N_6
Tx_N_6
Tx_P_6
Rx_P_7
Rx_N_7
Tx_N_7
Tx_P_7
Rx8_P
Rx8_N
Tx8_N
Tx8_P
Rx9_P
Rx9_N
Tx9_N
Tx9_P
Rx10_P
Rx10_N
Tx10_N
Tx10_P
Rx11_P
Rx11_N
Tx11_N
Tx11_P
Rx2_P
Rx2_N
Tx2_N
Tx2_P
Rx3_P
Rx3_N
Tx3_N
Tx3_P
Rx12_N
Rx12_P
Tx12_N
Tx12_P
Rx13_N
Rx13_P
Tx13_N
Tx13_P
Rx14_N
Rx14_P
Tx14_N
Tx14_P
Rx15_N
Rx15_P
Tx15_N
Tx15_P
Rx17_P
Rx17_N
Tx17_N
Tx17_P
Rx18_P
Rx18_N
Tx18_N
Tx18_P
Rx19_P
Rx19_N
Tx19_N
Tx19_P
Rx20_P
Rx20_N
Tx20_N
Tx20_P
TCLKA_N
TCLKA_P
TCLKB_N
TCLKB_P
TCLKC_N
TCLKC_P
TCLKD_N
TCLKD_P
FCLKA_N
FCLKA_P
AMC_GA2
AMC_GA1
AMC_GA0
AMC_GA[0..2]
AMC_En
IPMB_SCL
IPMB_SDA
I2C_IPMB_SCL
I2C_IPMB_SDA
PS0#
D1
SS16
PS1#
+12V_AMC
+3V3MP
PS1#
AMC_GA0
RSRVD6
RSRVD8
Tx0_P
Tx0_N
Rx0_P
Rx0_N
AMC_GA1
Tx1_P
Tx1_N
Rx1_P
Rx1_N
AMC_GA2
Tx2_P
Tx2_N
Rx2_P
Rx2_N
Tx3_P
Tx3_N
Rx3_P
Rx3_N
AMC_En
Tx_P_4
Tx_N_4
Rx_P_4
Rx_N_4
Tx_P_5
Tx_N_5
Rx_P_5
Rx_N_5
IPMB_SCL
Tx_P_6
Tx_N_6
Rx_P_6
Rx_N_6
Tx_P_7
Tx_N_7
Rx_P_7
Rx_N_7
IPMB_SDA
TCLKA_P
TCLKA_N
TCLKB_P
TCLKB_N
FCLKA_P
FCLKA_N
PS0#
P1
CMP-0001-00058-2
Rx8_N
Rx8_P
Tx8_N
Tx8_P
Rx9_N
Rx9_P
Tx9_N
Tx9_P
Rx10_N
Rx10_P
Tx10_N
Tx10_P
Rx11_N
Rx11_P
Tx11_N
Tx11_P
Rx12_N
Rx12_P
Tx12_N
Tx12_P
Rx13_N
Rx13_P
Tx13_N
Tx13_P
Rx14_N
Rx14_P
Tx14_N
Tx14_P
Rx15_N
Rx15_P
Tx15_N
Tx15_P
TCLKC_N
TCLKC_P
TCLKD_N
TCLKD_P
Rx17_N
Rx17_P
Tx17_N
Tx17_P
Rx18_N
Rx18_P
Tx18_N
Tx18_P
Rx19_N
Rx19_P
Tx19_N
Tx19_P
Rx20_N
Rx20_P
Tx20_N
Tx20_P
AMC_TCK
AMC_TMS
AMC_TRST
AMC_TDO
AMC_TDI

Michał Gąska / WUT

Sheet: /AMC_connector/
File: AMC_connector.sch

Title: Simple AFC

Size: A3 Date: 2019-01-16 **Rev: 9**
KiCad E.D.A. kicad (6.0.0-rc1-dev-577-ge0316af69) Id: 4/25

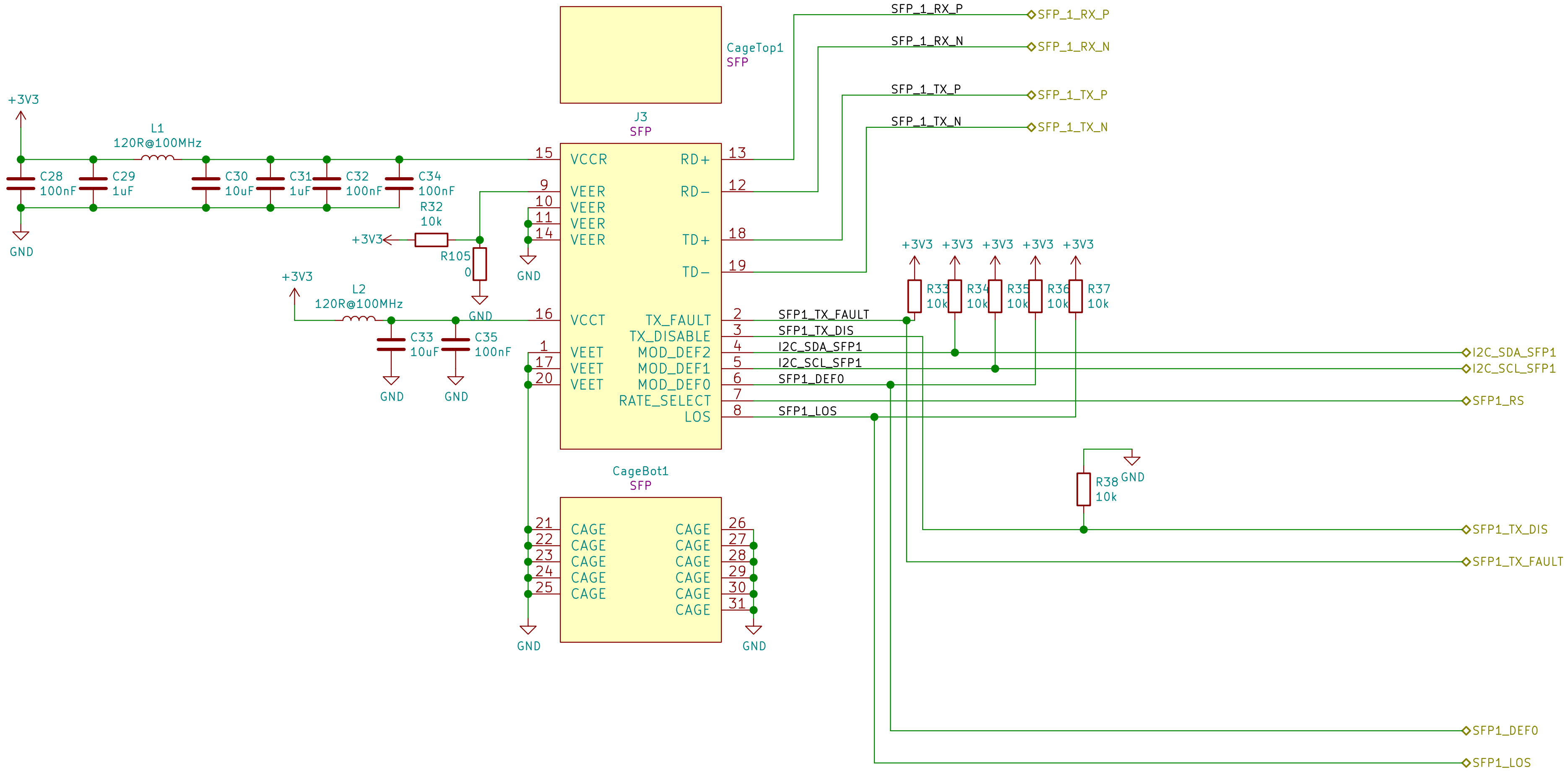

+3V3
L1
120R@100MHz
C28
100nF
C29
1uF
C30
10uF
C31
1uF
C32
100nF
C34
100nF
GND
R32
10k
+3V3
R105
0
GND
+3V3
L2
120R@100MHz
C33
10uF
C35
100nF
GND
GND
CageTop1
SFP
J3
SFP
15 VCCR
9 VEER
10 VEER
11 VEER
14 VEER
16 VCCT
1 VEET
17 VEET
20 VEET
GND
RD+ 13
RD- 12
TD+ 18
TD- 19
TX_FAULT 2
TX_DISABLE 3
MOD_DEF2 4
MOD_DEF1 5
MOD_DEF0 6
RATE_SELECT 7
LOS 8
SFP_1_RX_P
SFP_1_RX_N
SFP_1_TX_P
SFP_1_TX_N
SFP_1_RX_P
SFP_1_RX_N
SFP_1_TX_P
SFP_1_TX_N
SFP1_TX_FAULT
SFP1_TX_DIS
I2C_SDA_SFP1
I2C_SCL_SFP1
SFP1_DEF0
SFP1_LOS
+3V3 +3V3 +3V3 +3V3 +3V3
R33 10k
R34 10k
R35 10k
R36 10k
R37 10k
I2C_SDA_SFP1
I2C_SCL_SFP1
SFP1_RS
R38
10k
GND
SFP1_TX_DIS
SFP1_TX_FAULT
CageBot1
SFP
21 CAGE
22 CAGE
23 CAGE
24 CAGE
25 CAGE
CAGE 26
CAGE 27
CAGE 28
CAGE 29
CAGE 30
CAGE 31
GND
GND
SFP1_DEF0
SFP1_LOS

Michał Gąska / WUT

Sheet: /SFP1/
File: SFP1.sch

Title: Simple AFC

Size: A4	Date: 2019-01-16	**Rev: 9**
KiCad E.D.A. kicad (6.0.0-rc1-dev-577-ge0316af69)		Id: 5/25

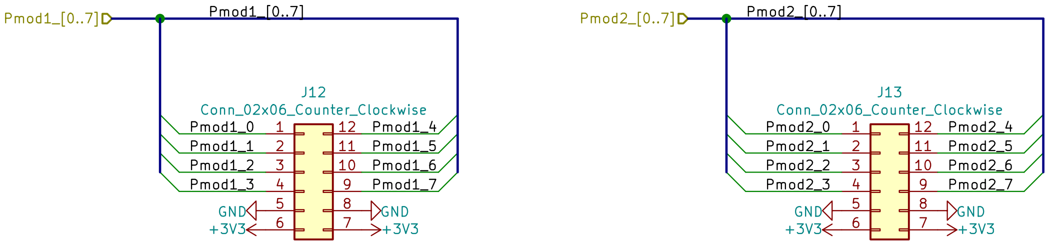
Pmod1_[0..7]
Pmod1_[0..7]
J12
Conn_02x06_Counter_Clockwise
Pmod1_0 1
Pmod1_1 2
Pmod1_2 3
Pmod1_3 4
GND 5
+3V3 6
12 Pmod1_4
11 Pmod1_5
10 Pmod1_6
9 Pmod1_7
8 GND
7 +3V3
Pmod2_[0..7]
Pmod2_[0..7]
J13
Conn_02x06_Counter_Clockwise
Pmod2_0 1
Pmod2_1 2
Pmod2_2 3
Pmod2_3 4
GND 5
+3V3 6
12 Pmod2_4
11 Pmod2_5
10 Pmod2_6
9 Pmod2_7
8 GND
7 +3V3

Michał Gąska / WUT
Sheet: /PMOD/
File: PMOD.sch

Title: Simple AFC

Size: A4
Date: 2019-01-16
Rev: 9
KiCad E.D.A. kicad (6.0.0-rc1-dev-577-ge0316af69)
Id: 6/25

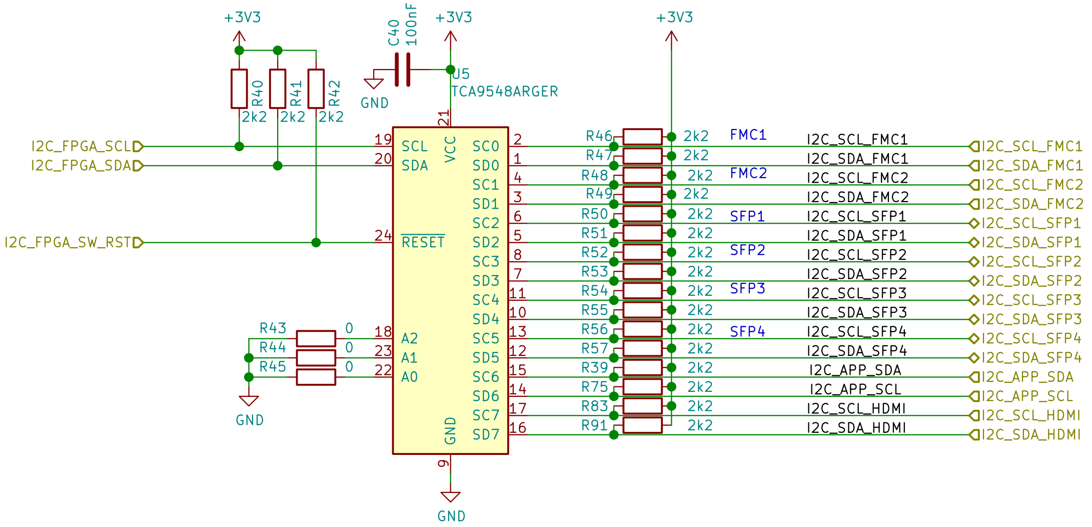
+3V3
+3V3
+3V3
C40
100nF
GND
U5
TCA9548ARGER
R40
2k2
R41
2k2
R42
2k2
I2C_FPGA_SCL
I2C_FPGA_SDA
I2C_FPGA_SW_RST
19 SCL
20 SDA
24 RESET
21 VCC
R43 0
R44 0
R45 0
18 A2
23 A1
22 A0
GND
GND
9
GND
SC0 2
SD0 1
SC1 4
SD1 3
SC2 6
SD2 5
SC3 8
SD3 7
SC4 11
SD4 10
SC5 13
SD5 12
SC6 15
SD6 14
SC7 17
SD7 16
R46 2k2
R47 2k2
R48 2k2
R49 2k2
R50 2k2
R51 2k2
R52 2k2
R53 2k2
R54 2k2
R55 2k2
R56 2k2
R57 2k2
R39 2k2
R75 2k2
R83 2k2
R91 2k2
FMC1
FMC2
SFP1
SFP2
SFP3
SFP4
I2C_SCL_FMC1
I2C_SDA_FMC1
I2C_SCL_FMC2
I2C_SDA_FMC2
I2C_SCL_SFP1
I2C_SDA_SFP1
I2C_SCL_SFP2
I2C_SDA_SFP2
I2C_SCL_SFP3
I2C_SDA_SFP3
I2C_SCL_SFP4
I2C_SDA_SFP4
I2C_APP_SDA
I2C_APP_SCL
I2C_SCL_HDMI
I2C_SDA_HDMI
I2C_SCL_FMC1
I2C_SDA_FMC1
I2C_SCL_FMC2
I2C_SDA_FMC2
I2C_SCL_SFP1
I2C_SDA_SFP1
I2C_SCL_SFP2
I2C_SDA_SFP2
I2C_SCL_SFP3
I2C_SDA_SFP3
I2C_SCL_SFP4
I2C_SDA_SFP4
I2C_APP_SDA
I2C_APP_SCL
I2C_SCL_HDMI
I2C_SDA_HDMI

Michał Gąska / WUT
Sheet: /I2C_MUX/
File: I2C_MUX.sch

Title: Simple AFC

Size: A4 Date: 2019-01-16 **Rev: 9**
KiCad E.D.A. kicad (6.0.0-rc1-dev-577-ge0316af69) Id: 7/25

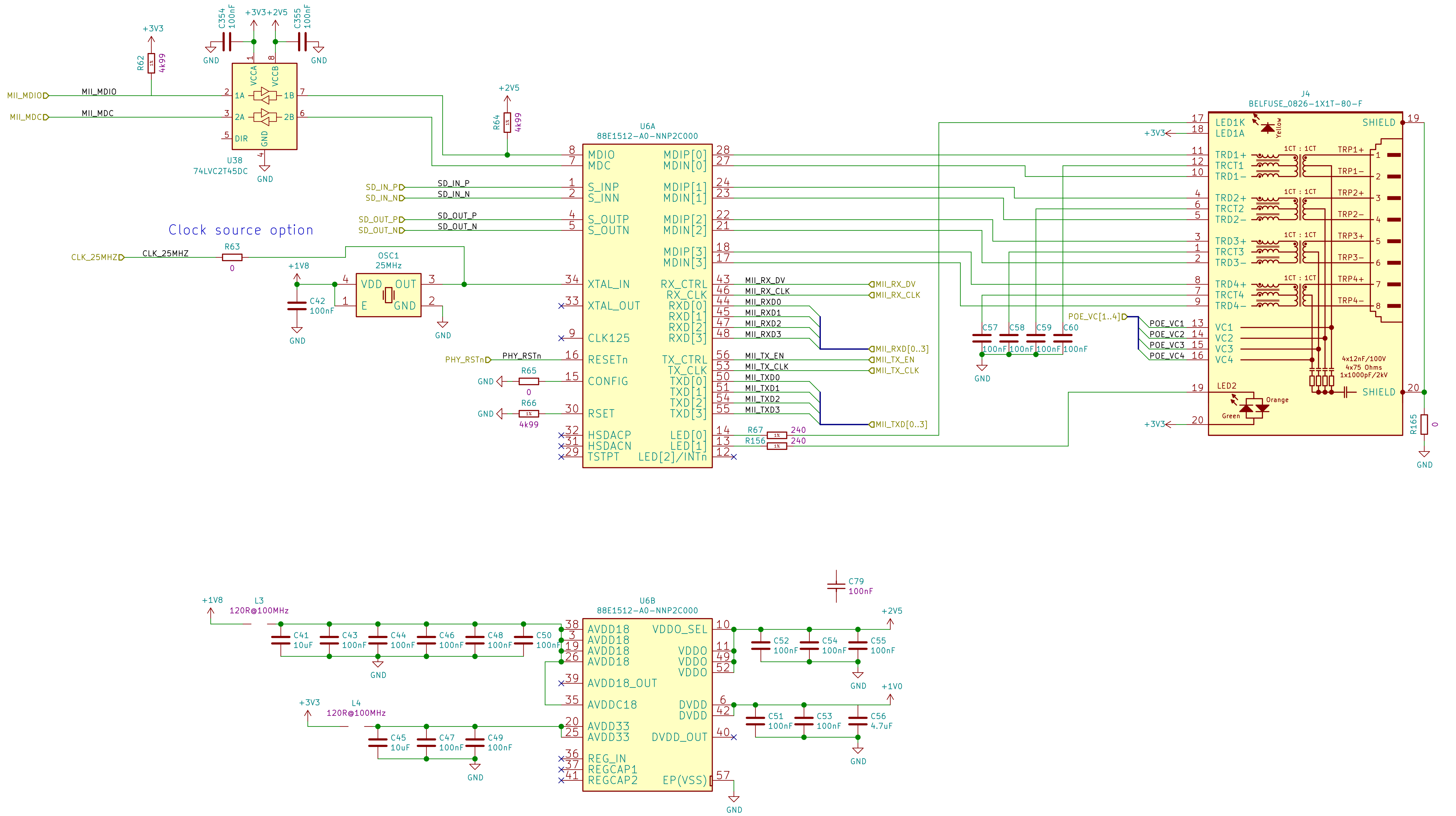
Clock source option
+3V3
R62 4k99
C354 100nF
+3V3
+2V5
C355 100nF
GND
VCCA
VCCB
1A
1B
2A
2B
DIR
U38
74LVC2T45DC
MII_MDIO
MII_MDC
+2V5
R64 4k99
U6A
88E1512-A0-NNP2C000
MDIO
MDC
S_INP
S_INN
S_OUTP
S_OUTN
XTAL_IN
XTAL_OUT
CLK125
RESETn
CONFIG
RSET
HSDACP
HSDACN
TSTPT
MDIP[0]
MDIN[0]
MDIP[1]
MDIN[1]
MDIP[2]
MDIN[2]
MDIP[3]
MDIN[3]
RX_CTRL
RX_CLK
RXD[0]
RXD[1]
RXD[2]
RXD[3]
TX_CTRL
TX_CLK
TXD[0]
TXD[1]
TXD[2]
TXD[3]
LED[0]
LED[1]
LED[2]/INTn
SD_IN_P
SD_IN_N
SD_OUT_P
SD_OUT_N
CLK_25MHZ
R63 0
OSC1 25MHz
VDD
OUT
E
GND
+1V8
C42 100nF
PHY_RSTn
R65 0
R66 4k99
MII_RX_DV
MII_RX_CLK
MII_RXD0
MII_RXD1
MII_RXD2
MII_RXD3
MII_RXD[0..3]
MII_TX_EN
MII_TX_CLK
MII_TXD0
MII_TXD1
MII_TXD2
MII_TXD3
MII_TXD[0..3]
R67 240
R156 240
J4
BELFUSE_0826-1X1T-80-F
LED1K
LED1A
Yellow
SHIELD
TRD1+
TRCT1
TRD1-
TRD2+
TRCT2
TRD2-
TRD3+
TRCT3
TRD3-
TRD4+
TRCT4
TRD4-
1CT : 1CT
TRP1+
TRP1-
TRP2+
TRP2-
TRP3+
TRP3-
TRP4+
TRP4-
VC1
VC2
VC3
VC4
POE_VC[1..4]
POE_VC1
POE_VC2
POE_VC3
POE_VC4
4x12nF/100V
4x75 Ohms
1x1000pF/2kV
LED2
Orange
Green
R165 0
C57 100nF
C58 100nF
C59 100nF
C60 100nF
U6B
88E1512-A0-NNP2C000
AVDD18
AVDD18_OUT
AVDDC18
AVDD33
REG_IN
REGCAP1
REGCAP2
VDDO_SEL
VDDO
DVDD
DVDD_OUT
EP(VSS)
+1V8
L3 120R@100MHz
C41 10uF
C43 100nF
C44 100nF
C46 100nF
C48 100nF
C50 100nF
+3V3
L4 120R@100MHz
C45 10uF
C47 100nF
C49 100nF
C79 100nF
+2V5
C52 100nF
C54 100nF
C55 100nF
+1V0
C51 100nF
C53 100nF
C56 4.7uF
GND

Michał Gąska / WUT
Sheet: /ETH_PHY/
File: ETH_PHY.sch

Title: Simple AFC

Size: A3 Date: 2019-01-16 **Rev: 9**
KiCad E.D.A. kicad (6.0.0-rc1-dev-577-ge0316af69) Id: 8/25

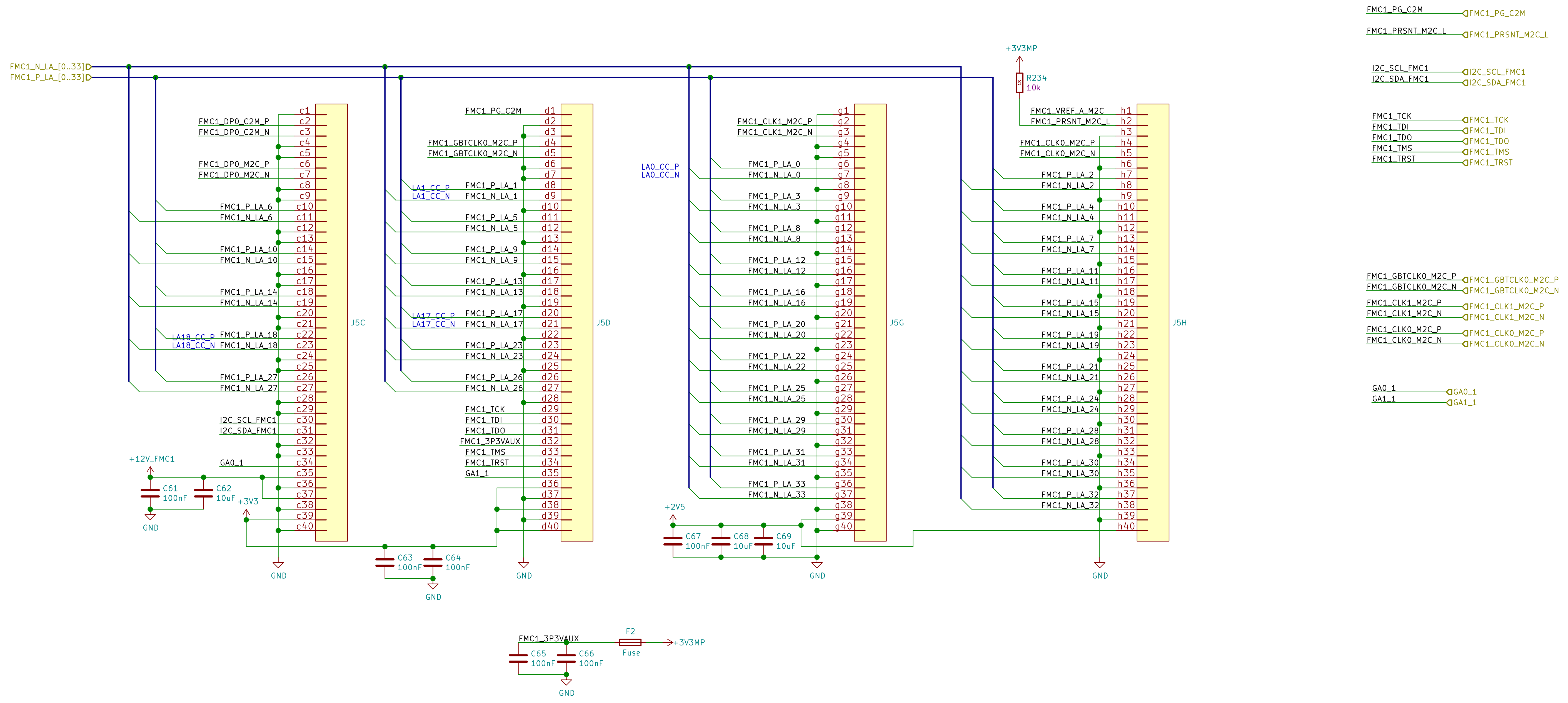
FMC1_N_LA_[0..33]
FMC1_P_LA_[0..33]
FMC1_DP0_C2M_P
FMC1_DP0_C2M_N
FMC1_DP0_M2C_P
FMC1_DP0_M2C_N
FMC1_P_LA_6
FMC1_N_LA_6
FMC1_P_LA_10
FMC1_N_LA_10
FMC1_P_LA_14
FMC1_N_LA_14
LA18_CC_P
LA18_CC_N
FMC1_P_LA_18
FMC1_N_LA_18
FMC1_P_LA_27
FMC1_N_LA_27
I2C_SCL_FMC1
I2C_SDA_FMC1
GA0_1
J5C
+12V_FMC1
C61
100nF
C62
10uF
+3V3
GND
FMC1_PG_C2M
FMC1_GBTCLK0_M2C_P
FMC1_GBTCLK0_M2C_N
LA1_CC_P
LA1_CC_N
FMC1_P_LA_1
FMC1_N_LA_1
FMC1_P_LA_5
FMC1_N_LA_5
FMC1_P_LA_9
FMC1_N_LA_9
FMC1_P_LA_13
FMC1_N_LA_13
LA17_CC_P
LA17_CC_N
FMC1_P_LA_17
FMC1_N_LA_17
FMC1_P_LA_23
FMC1_N_LA_23
FMC1_P_LA_26
FMC1_N_LA_26
FMC1_TCK
FMC1_TDI
FMC1_TDO
FMC1_3P3VAUX
FMC1_TMS
FMC1_TRST
GA1_1
J5D
C63
100nF
C64
100nF
GND
FMC1_CLK1_M2C_P
FMC1_CLK1_M2C_N
LA0_CC_P
LA0_CC_N
FMC1_P_LA_0
FMC1_N_LA_0
FMC1_P_LA_3
FMC1_N_LA_3
FMC1_P_LA_8
FMC1_N_LA_8
FMC1_P_LA_12
FMC1_N_LA_12
FMC1_P_LA_16
FMC1_N_LA_16
FMC1_P_LA_20
FMC1_N_LA_20
FMC1_P_LA_22
FMC1_N_LA_22
FMC1_P_LA_25
FMC1_N_LA_25
FMC1_P_LA_29
FMC1_N_LA_29
FMC1_P_LA_31
FMC1_N_LA_31
FMC1_P_LA_33
FMC1_N_LA_33
J5G
+2V5
C67
100nF
C68
10uF
C69
10uF
GND
+3V3MP
R234
10k
FMC1_VREF_A_M2C
FMC1_PRSNT_M2C_L
FMC1_CLK0_M2C_P
FMC1_CLK0_M2C_N
FMC1_P_LA_2
FMC1_N_LA_2
FMC1_P_LA_4
FMC1_N_LA_4
FMC1_P_LA_7
FMC1_N_LA_7
FMC1_P_LA_11
FMC1_N_LA_11
FMC1_P_LA_15
FMC1_N_LA_15
FMC1_P_LA_19
FMC1_N_LA_19
FMC1_P_LA_21
FMC1_N_LA_21
FMC1_P_LA_24
FMC1_N_LA_24
FMC1_P_LA_28
FMC1_N_LA_28
FMC1_P_LA_30
FMC1_N_LA_30
FMC1_P_LA_32
FMC1_N_LA_32
J5H
GND
FMC1_PG_C2M
FMC1_PRSNT_M2C_L
I2C_SCL_FMC1
I2C_SDA_FMC1
FMC1_TCK
FMC1_TDI
FMC1_TDO
FMC1_TMS
FMC1_TRST
FMC1_GBTCLK0_M2C_P
FMC1_GBTCLK0_M2C_N
FMC1_CLK1_M2C_P
FMC1_CLK1_M2C_N
FMC1_CLK0_M2C_P
FMC1_CLK0_M2C_N
GA0_1
GA1_1
FMC1_3P3VAUX
C65
100nF
C66
100nF
GND
F2
Fuse
+3V3MP

Michał Gąska / WUT

Sheet: /FMC_1/
File: FMC_1.sch

Title: Simple AFC

Size: A3 Date: 2019-01-16 **Rev: 9**
KiCad E.D.A. kicad (6.0.0-rc1-dev-577-ge0316af69) Id: 9/25

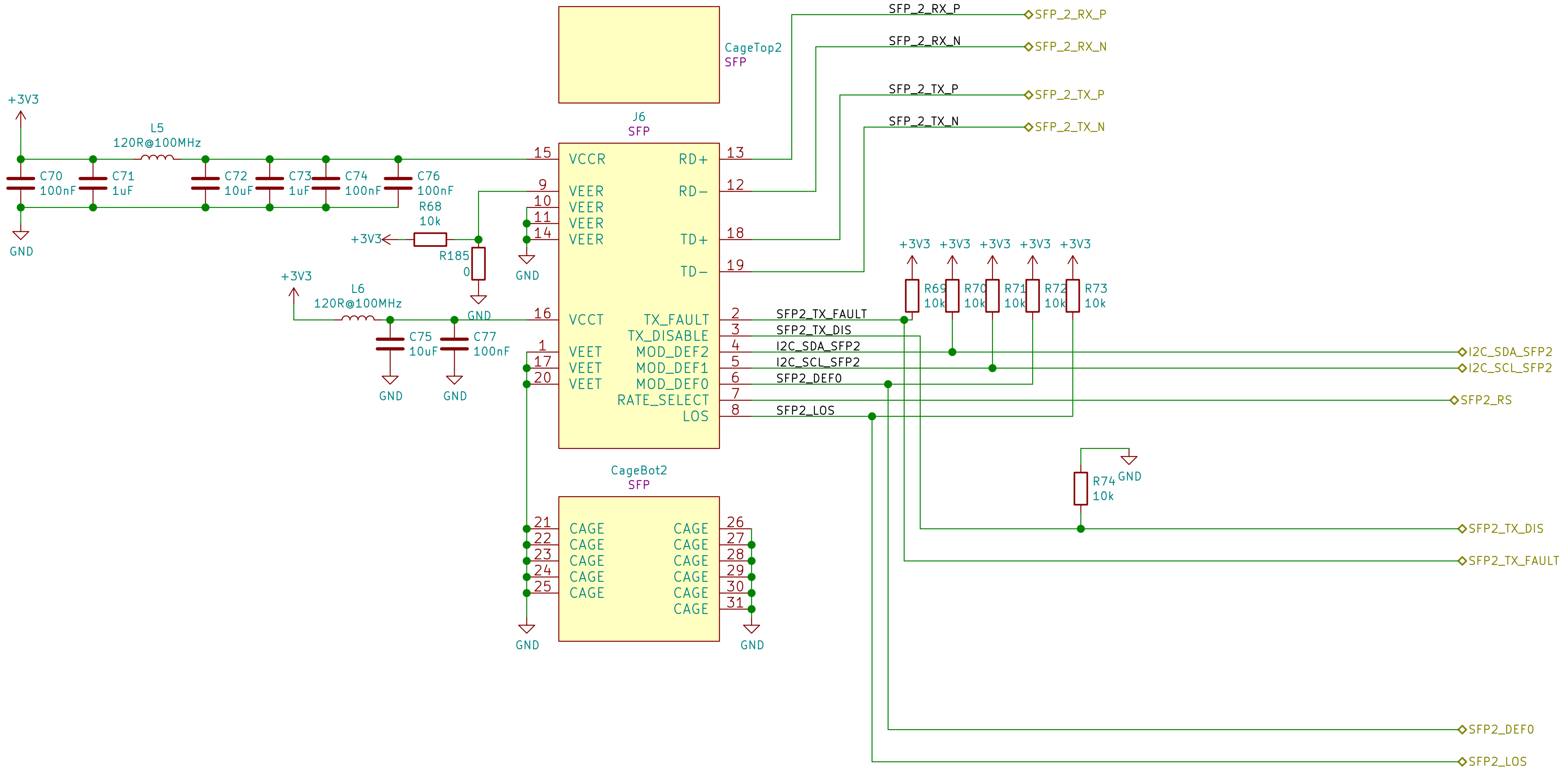
SFP_2_RX_P
SFP_2_RX_N
SFP_2_TX_P
SFP_2_TX_N
CageTop2
SFP
J6
SFP
+3V3
L5
120R@100MHz
C70
100nF
C71
1uF
C72
10uF
C73
1uF
C74
100nF
C76
100nF
GND
15 VCCR
9 VEER
10 VEER
11 VEER
14 VEER
RD+ 13
RD− 12
TD+ 18
TD− 19
R68
10k
+3V3
R185
0
GND
GND
+3V3
L6
120R@100MHz
C75
10uF
C77
100nF
GND
GND
GND
16 VCCT
1 VEET
17 VEET
20 VEET
TX_FAULT 2
TX_DISABLE 3
MOD_DEF2 4
MOD_DEF1 5
MOD_DEF0 6
RATE_SELECT 7
LOS 8
SFP2_TX_FAULT
SFP2_TX_DIS
I2C_SDA_SFP2
I2C_SCL_SFP2
SFP2_DEF0
SFP2_LOS
+3V3
+3V3
+3V3
+3V3
+3V3
R69
10k
R70
10k
R71
10k
R72
10k
R73
10k
I2C_SDA_SFP2
I2C_SCL_SFP2
SFP2_RS
R74
10k
GND
SFP2_TX_DIS
SFP2_TX_FAULT
SFP2_DEF0
SFP2_LOS
CageBot2
SFP
21 CAGE
22 CAGE
23 CAGE
24 CAGE
25 CAGE
CAGE 26
CAGE 27
CAGE 28
CAGE 29
CAGE 30
CAGE 31
GND
GND

Michał Gąska / WUT

Sheet: /SFP2/
File: SFP2.sch

Title: Simple AFC

Size: A4 Date: 2019-01-16 **Rev: 9**
KiCad E.D.A. kicad (6.0.0-rc1-dev-577-ge0316af69) Id: 10/25

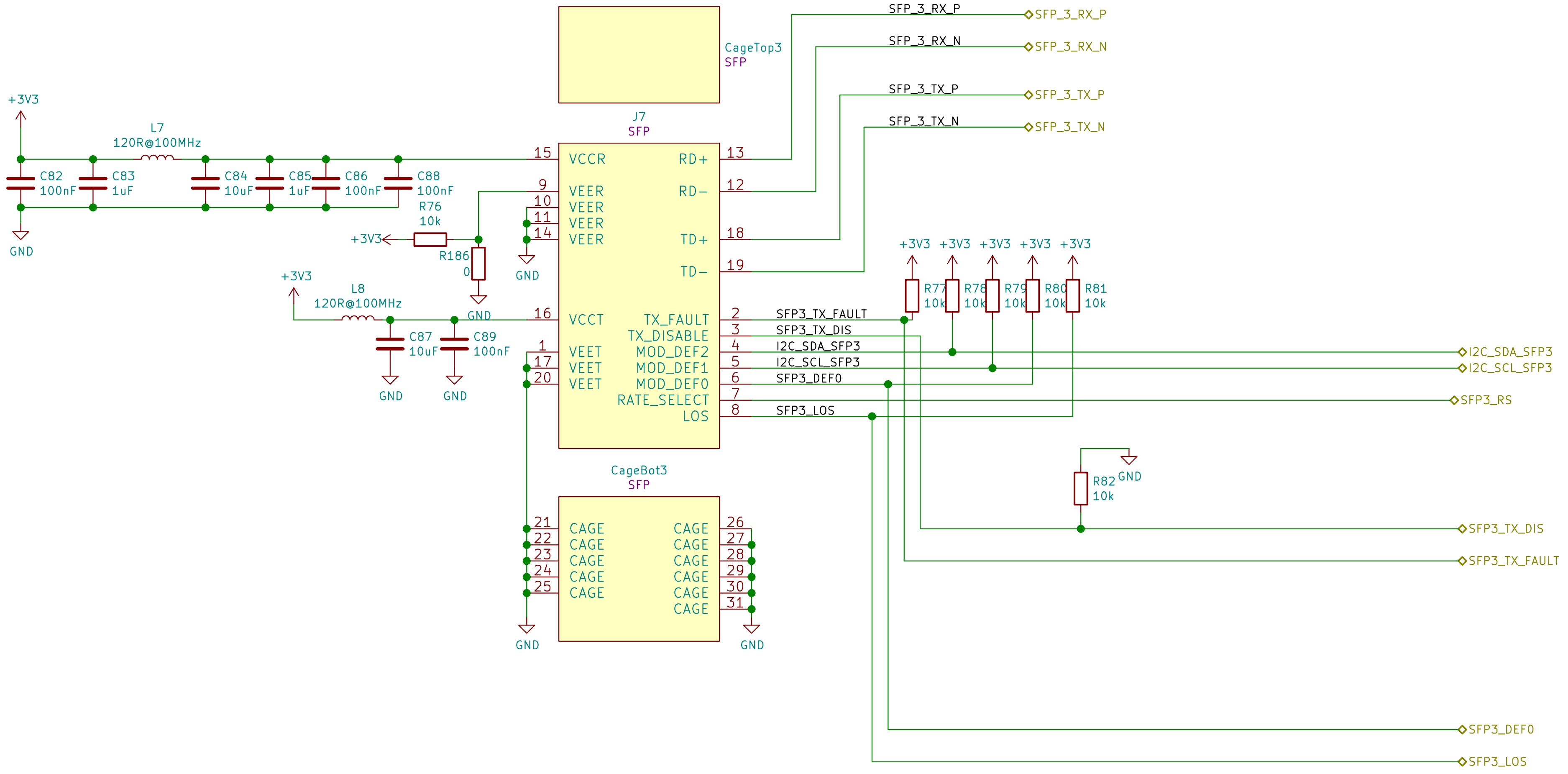
SFP_3_RX_P
SFP_3_RX_N
SFP_3_TX_P
SFP_3_TX_N
CageTop3
SFP
J7
SFP
+3V3
L7
120R@100MHz
C82
100nF
C83
1uF
C84
10uF
C85
1uF
C86
100nF
C88
100nF
GND
R76
10k
+3V3
R186
0
GND
+3V3
L8
120R@100MHz
C87
10uF
C89
100nF
GND
GND
15 VCCR
9 VEER
10 VEER
11 VEER
14 VEER
16 VCCT
1 VEET
17 VEET
20 VEET
RD+ 13
RD− 12
TD+ 18
TD− 19
TX_FAULT 2
TX_DISABLE 3
MOD_DEF2 4
MOD_DEF1 5
MOD_DEF0 6
RATE_SELECT 7
LOS 8
GND
SFP3_TX_FAULT
SFP3_TX_DIS
I2C_SDA_SFP3
I2C_SCL_SFP3
SFP3_DEF0
SFP3_LOS
+3V3
+3V3
+3V3
+3V3
+3V3
R77
10k
R78
10k
R79
10k
R80
10k
R81
10k
I2C_SDA_SFP3
I2C_SCL_SFP3
SFP3_RS
R82
10k
GND
SFP3_TX_DIS
SFP3_TX_FAULT
CageBot3
SFP
21 CAGE
22 CAGE
23 CAGE
24 CAGE
25 CAGE
CAGE 26
CAGE 27
CAGE 28
CAGE 29
CAGE 30
CAGE 31
GND
GND
SFP3_DEF0
SFP3_LOS

Michał Gąska / WUT
Sheet: /SFP3/
File: SFP3.sch

Title: Simple AFC

Size: A4
Date: 2019-01-16
Rev: 9
KiCad E.D.A. kicad (6.0.0-rc1-dev-577-ge0316af69)
Id: 11/25

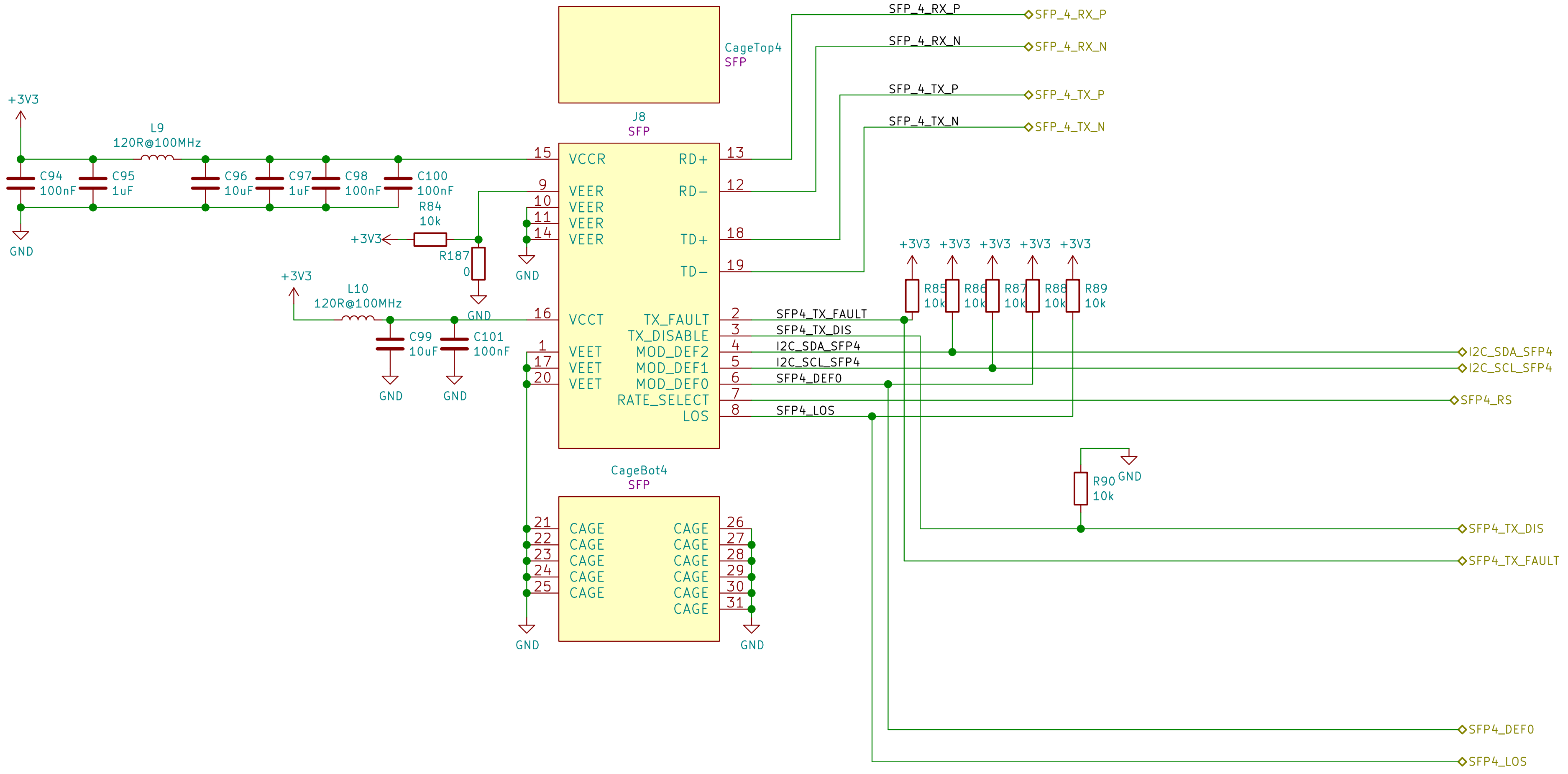
CageTop4
SFP
J8
SFP
SFP_4_RX_P
SFP_4_RX_N
SFP_4_TX_P
SFP_4_TX_N
+3V3
L9
120R@100MHz
C94
100nF
C95
1uF
C96
10uF
C97
1uF
C98
100nF
C100
100nF
GND
R84
10k
+3V3
R187
0
GND
GND
+3V3
L10
120R@100MHz
C99
10uF
C101
100nF
GND
GND
15 VCCR
9 VEER
10 VEER
11 VEER
14 VEER
16 VCCT
1 VEET
17 VEET
20 VEET
RD+ 13
RD− 12
TD+ 18
TD− 19
TX_FAULT 2
TX_DISABLE 3
MOD_DEF2 4
MOD_DEF1 5
MOD_DEF0 6
RATE_SELECT 7
LOS 8
SFP4_TX_FAULT
SFP4_TX_DIS
I2C_SDA_SFP4
I2C_SCL_SFP4
SFP4_DEF0
SFP4_LOS
+3V3
+3V3
+3V3
+3V3
+3V3
R85
10k
R86
10k
R87
10k
R88
10k
R89
10k
I2C_SDA_SFP4
I2C_SCL_SFP4
SFP4_RS
R90
10k
GND
SFP4_TX_DIS
SFP4_TX_FAULT
SFP4_DEF0
SFP4_LOS
CageBot4
SFP
21 CAGE
22 CAGE
23 CAGE
24 CAGE
25 CAGE
CAGE 26
CAGE 27
CAGE 28
CAGE 29
CAGE 30
CAGE 31
GND
GND

Michał Gąska / WUT
Sheet: /SFP4/
File: SFP4.sch

Title: Simple AFC

Size: A4
Date: 2019-01-16
Rev: 9
KiCad E.D.A. kicad (6.0.0-rc1-dev-577-ge0316af69)
Id: 12/25

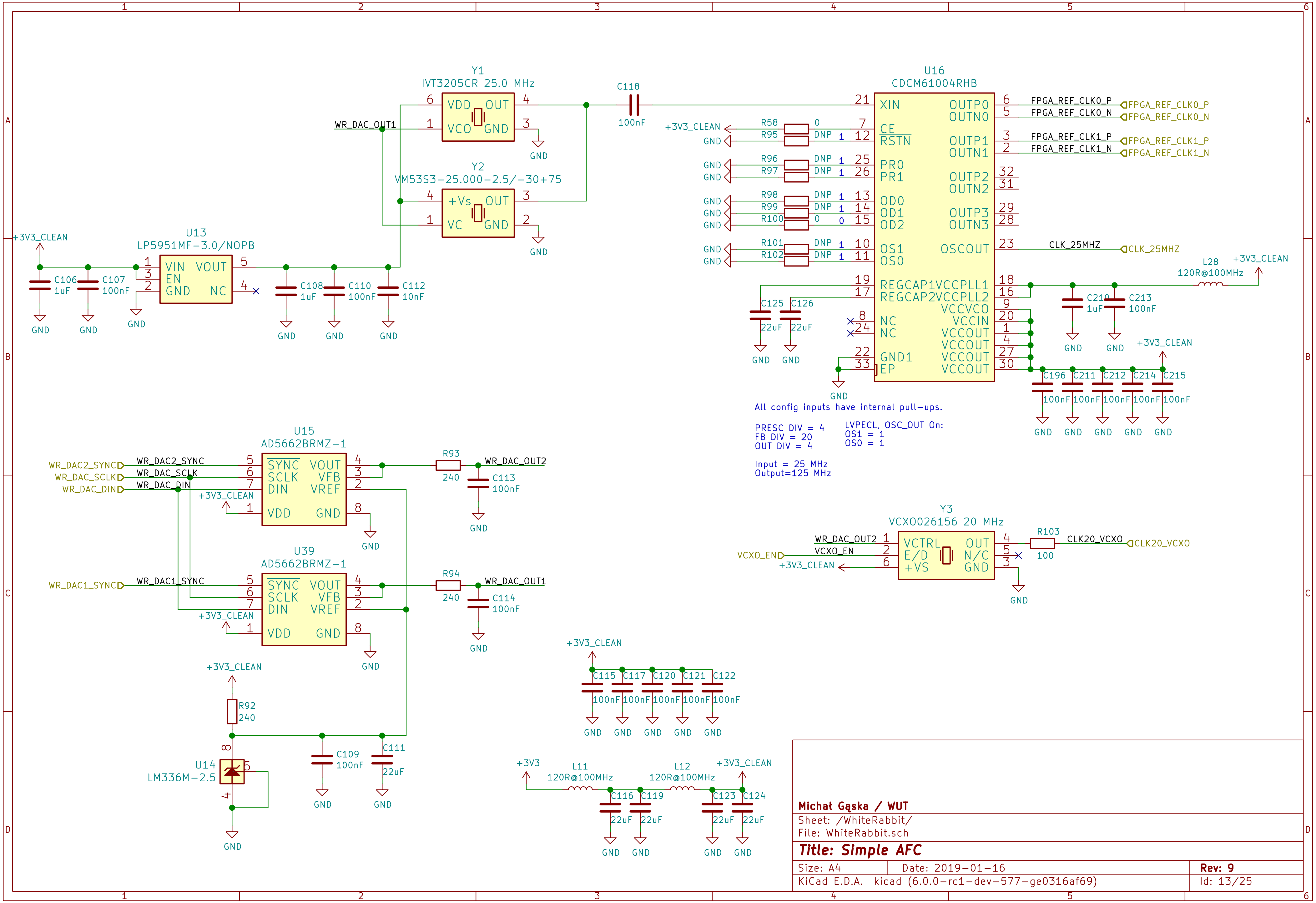
Y1
IVT3205CR 25.0 MHz
VDD OUT VCO GND
WR_DAC_OUT1
C118
100nF
U16
CDCM61004RHB
XIN CE RSTN PR0 PR1 OD0 OD1 OD2 OS1 OS0
REGCAP1 REGCAP2 NC NC GND1 EP
OUTP0 OUTN0 OUTP1 OUTN1 OUTP2 OUTN2 OUTP3 OUTN3 OSCOUT
VCCPLL1 VCCPLL2 VCCVCO VCCIN VCCOUT
FPGA_REF_CLK0_P
FPGA_REF_CLK0_N
FPGA_REF_CLK1_P
FPGA_REF_CLK1_N
CLK_25MHZ
+3V3_CLEAN
R58 0
R95 DNP
R96 DNP
R97 DNP
R98 DNP
R99 DNP
R100 0
R101 DNP
R102 DNP
GND
Y2
VM53S3-25.000-2.5/-30+75
+Vs OUT VC GND
U13
LP5951MF-3.0/NOPB
VIN VOUT EN GND NC
C106 1uF
C107 100nF
C108 1uF
C110 100nF
C112 10nF
C125 22uF
C126 22uF
L28
120R@100MHz
C210 1uF
C213 100nF
C196 100nF
C211 100nF
C212 100nF
C214 100nF
C215 100nF
U15
AD5662BRMZ-1
SYNC SCLK DIN VDD VOUT VFB VREF GND
WR_DIV2_SYNC
WR_DAC_SCLK
WR_DAC_DIN
WR_DAC2_SYNC
R93 240
WR_DAC_OUT2
C113 100nF
U39
AD5662BRMZ-1
WR_DIV1_SYNC
WR_DAC1_SYNC
R94 240
WR_DAC_OUT1
C114 100nF
R92 240
U14
LM336M-2.5
C109 100nF
C111 22uF
Y3
VCXO026156 20 MHz
VCTRL E/D +VS OUT N/C GND
VCXO_EN
R103 100
CLK20_VCXO
C115 C117 C120 C121 C122 100nF
+3V3
L11 120R@100MHz
L12 120R@100MHz
C116 C119 C123 C124 22uF

All config inputs have internal pull-ups.

PRESC DIV = 4
FB DIV = 20
OUT DIV = 4

LVPECL, OSC_OUT On:
OS1 = 1
OS0 = 1

Input = 25 MHz
Output=125 MHz

Michał Gąska / WUT
Sheet: /WhiteRabbit/
File: WhiteRabbit.sch
Title: Simple AFC
Size: A4 Date: 2019-01-16 **Rev: 9**
KiCad E.D.A. kicad (6.0.0-rc1-dev-577-ge0316af69) Id: 13/25

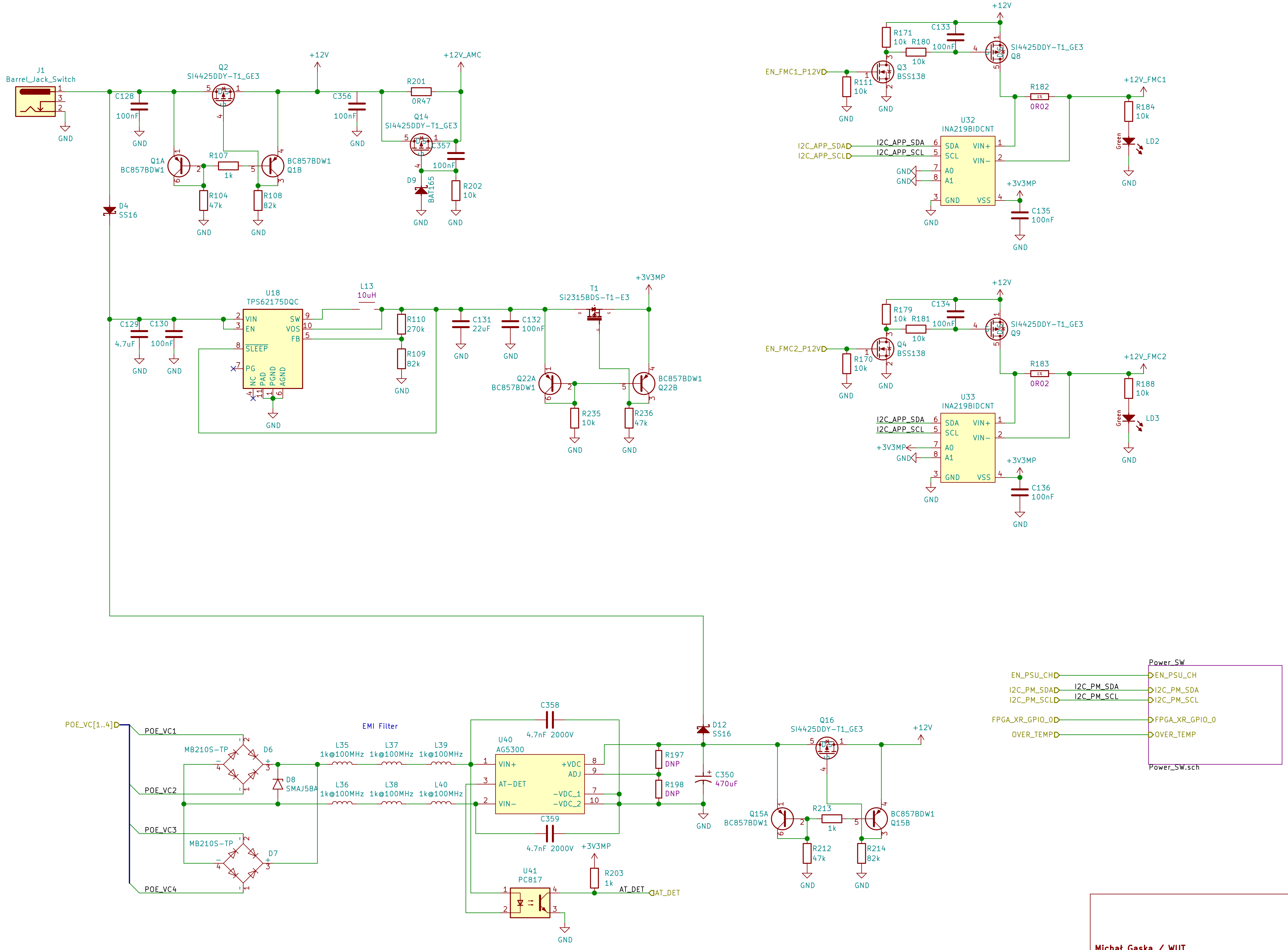
J1
Barrel_Jack_Switch
GND
C128
100nF
Q2
SI4425DDY-T1_GE3
+12V
+12V_AMC
R201
0R47
C356
100nF
Q14
SI4425DDY-T1_GE3
C357
100nF
Q1A
BC857BDW1
R107
1k
BC857BDW1
Q1B
R104
47k
R108
82k
D9
BAT165
R202
10k
D4
SS16
U18
TPS62175DQC
VIN
EN
SLEEP
PG
NC
PAD
PGND
AGND
SW
VOS
FB
C129
4.7uF
C130
100nF
L13
10uH
R110
270k
R109
82k
C131
22uF
C132
100nF
T1
Si2315BDS-T1-E3
+3V3MP
Q22A
BC857BDW1
BC857BDW1
Q22B
R235
10k
R236
47k
+12V
R171
10k
R180
10k
C133
100nF
SI4425DDY-T1_GE3
Q8
EN_FMC1_P12V
R111
10k
Q3
BSS138
R182
0R02
+12V_FMC1
R184
10k
Green
LD2
U32
INA219BIDCNT
I2C_APP_SDA
I2C_APP_SCL
SDA
SCL
A0
A1
GND
VIN+
VIN-
VSS
+3V3MP
C135
100nF
R179
10k
R181
10k
C134
100nF
SI4425DDY-T1_GE3
Q9
EN_FMC2_P12V
R170
10k
Q4
BSS138
R183
0R02
+12V_FMC2
R188
10k
Green
LD3
U33
INA219BIDCNT
C136
100nF
Power_SW
EN_PSU_CH
I2C_PM_SDA
I2C_PM_SCL
FPGA_XR_GPIO_0
OVER_TEMP
Power_SW.sch
POE_VC[1..4]
POE_VC1
POE_VC2
POE_VC3
POE_VC4
MB210S-TP
D6
D7
D8
SMAJ58A
EMI Filter
L35
L37
L39
L36
L38
L40
1k@100MHz
C358
4.7nF 2000V
C359
4.7nF 2000V
U40
AG5300
VIN+
AT-DET
VIN-
+VDC
ADJ
-VDC_1
-VDC_2
R197
DNP
R198
DNP
D12
SS16
C350
470uF
Q16
SI4425DDY-T1_GE3
+12V
Q15A
BC857BDW1
R213
1k
BC857BDW1
Q15B
R212
47k
R214
82k
U41
PC817
+3V3MP
R203
1k
AT_DET
GND

Michał Gąska / WUT

Sheet: /Power/
File: Power.sch

Title: Simple AFC

Size: A3
Date: 2019-01-16
Rev: 9
KiCad E.D.A. kicad (6.0.0-rc1-dev-577-ge0316af69)
Id: 14/25

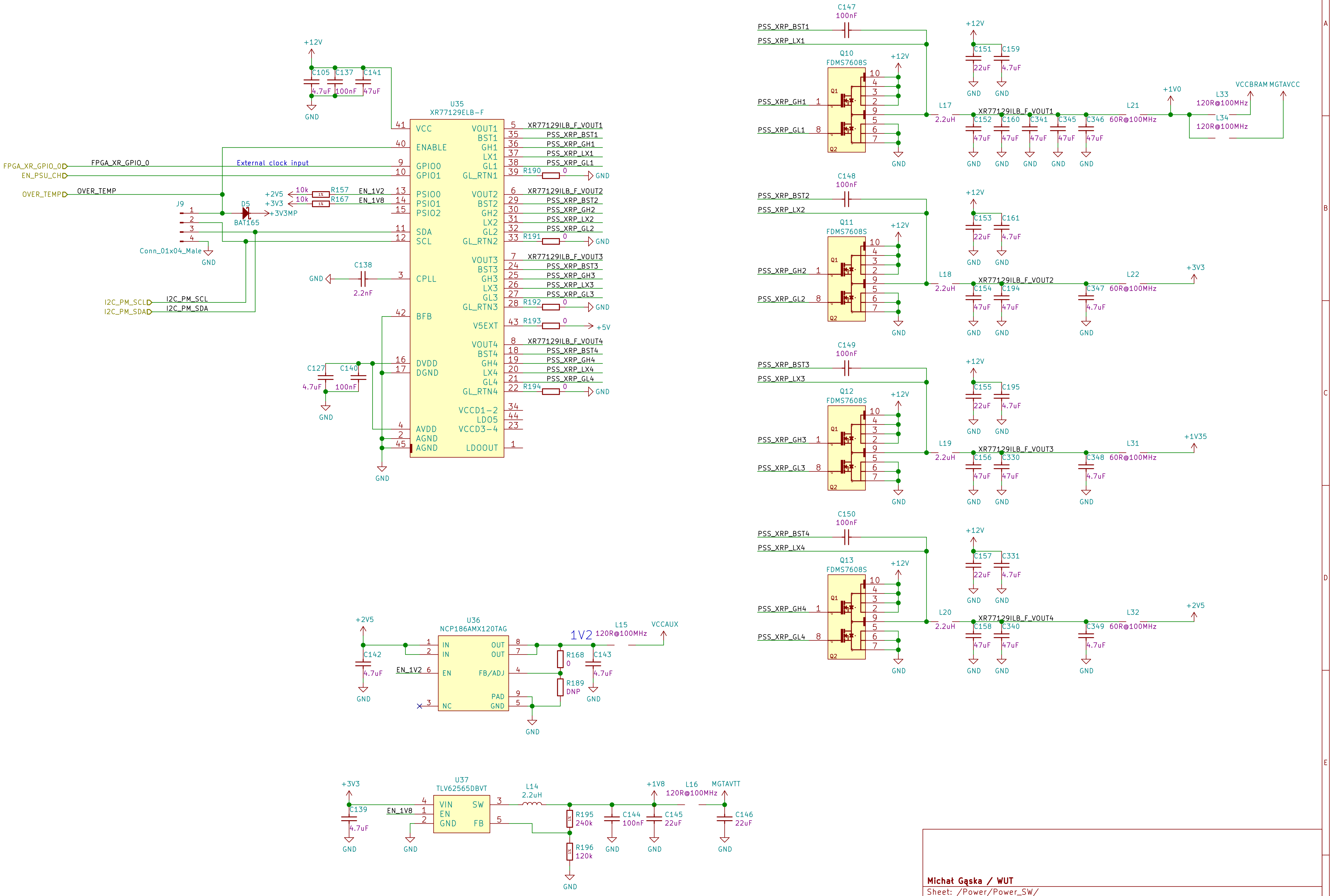
+12V
C105
4.7uF
C137
100nF
C141
47uF
GND
U35
XR77129ELB-F
41 VCC
40 ENABLE
9 GPIO0
10 GPIO1
13 PSIO0
14 PSIO1
15 PSIO2
11 SDA
12 SCL
3 CPLL
42 BFB
16 DVDD
17 DGND
4 AVDD
2 AGND
45 AGND
VOUT1 5
BST1 35
GH1 36
LX1 37
GL1 38
GL_RTN1 39
VOUT2 6
BST2 29
GH2 30
LX2 31
GL2 32
GL_RTN2 33
VOUT3 7
BST3 24
GH3 25
LX3 26
GL3 27
GL_RTN3 28
V5EXT 43
VOUT4 8
BST4 18
GH4 19
LX4 20
GL4 21
GL_RTN4 22
VCCD1-2 34
LDO5 44
VCCD3-4 23
LDOOUT 1
XR77129ILB_F_VOUT1
PSS_XRP_BST1
PSS_XRP_GH1
PSS_XRP_LX1
PSS_XRP_GL1
R190 0
XR77129ILB_F_VOUT2
PSS_XRP_BST2
PSS_XRP_GH2
PSS_XRP_LX2
PSS_XRP_GL2
R191 0
XR77129ILB_F_VOUT3
PSS_XRP_BST3
PSS_XRP_GH3
PSS_XRP_LX3
PSS_XRP_GL3
R192 0
R193 0
+5V
XR77129ILB_F_VOUT4
PSS_XRP_BST4
PSS_XRP_GH4
PSS_XRP_LX4
PSS_XRP_GL4
R194 0
FPGA_XR_GPIO_0
EN_PSU_CH
FPGA_XR_GPIO_0
External clock input
OVER_TEMP
OVER_TEMP
+2V5
+3V3
10k R157
10k R167
EN_1V2
EN_1V8
J9
1
2
3
4
Conn_01x04_Male
D5
BAT165
+3V3MP
I2C_PM_SCL
I2C_PM_SDA
I2C_PM_SCL
I2C_PM_SDA
C138
2.2nF
C127
4.7uF
C140
100nF
PSS_XRP_BST1
PSS_XRP_LX1
C147
100nF
Q10
FDMS7608S
Q1
Q2
PSS_XRP_GH1
PSS_XRP_GL1
L17
2.2uH
C151 22uF
C159 4.7uF
C152 47uF
C160 47uF
C341 47uF
C345 47uF
C346 47uF
XR77129ILB_F_VOUT1
L21
60R@100MHz
+1V0
L33
120R@100MHz
L34
120R@100MHz
VCCBRAM
MGTAVCC
PSS_XRP_BST2
PSS_XRP_LX2
C148
100nF
Q11
FDMS7608S
PSS_XRP_GH2
PSS_XRP_GL2
L18
2.2uH
C153 22uF
C161 4.7uF
C154 47uF
C194 47uF
C347 4.7uF
XR77129ILB_F_VOUT2
L22
60R@100MHz
+3V3
PSS_XRP_BST3
PSS_XRP_LX3
C149
100nF
Q12
FDMS7608S
PSS_XRP_GH3
PSS_XRP_GL3
L19
2.2uH
C155 22uF
C195 4.7uF
C156 47uF
C330 47uF
C348 4.7uF
XR77129ILB_F_VOUT3
L31
60R@100MHz
+1V35
PSS_XRP_BST4
PSS_XRP_LX4
C150
100nF
Q13
FDMS7608S
PSS_XRP_GH4
PSS_XRP_GL4
L20
2.2uH
C157 22uF
C331 4.7uF
C158 47uF
C340 47uF
C349 4.7uF
XR77129ILB_F_VOUT4
L32
60R@100MHz
+2V5
U36
NCP186AMX120TAG
+2V5
C142
4.7uF
EN_1V2
1 IN
2 IN
6 EN
3 NC
OUT 8
OUT 7
FB/ADJ 4
PAD 9
GND 5
1V2
L15
120R@100MHz
VCCAUX
R168 0
R189 DNP
C143 4.7uF
U37
TLV62565DBVT
+3V3
C139
4.7uF
EN_1V8
4 VIN
1 EN
2 GND
SW 3
FB 5
L14
2.2uH
R195 240k
R196 120k
C144 100nF
+1V8
C145 22uF
L16
120R@100MHz
MGTAVTT
C146 22uF
GND

Michał Gąska / WUT

Sheet: /Power/Power_SW/
File: Power_SW.sch

Title: Simple AFC

Size: A3	Date: 2019-01-16	Rev: 9
KiCad E.D.A. kicad (6.0.0-rc1-dev-577-ge0316af69)		Id: 15/25

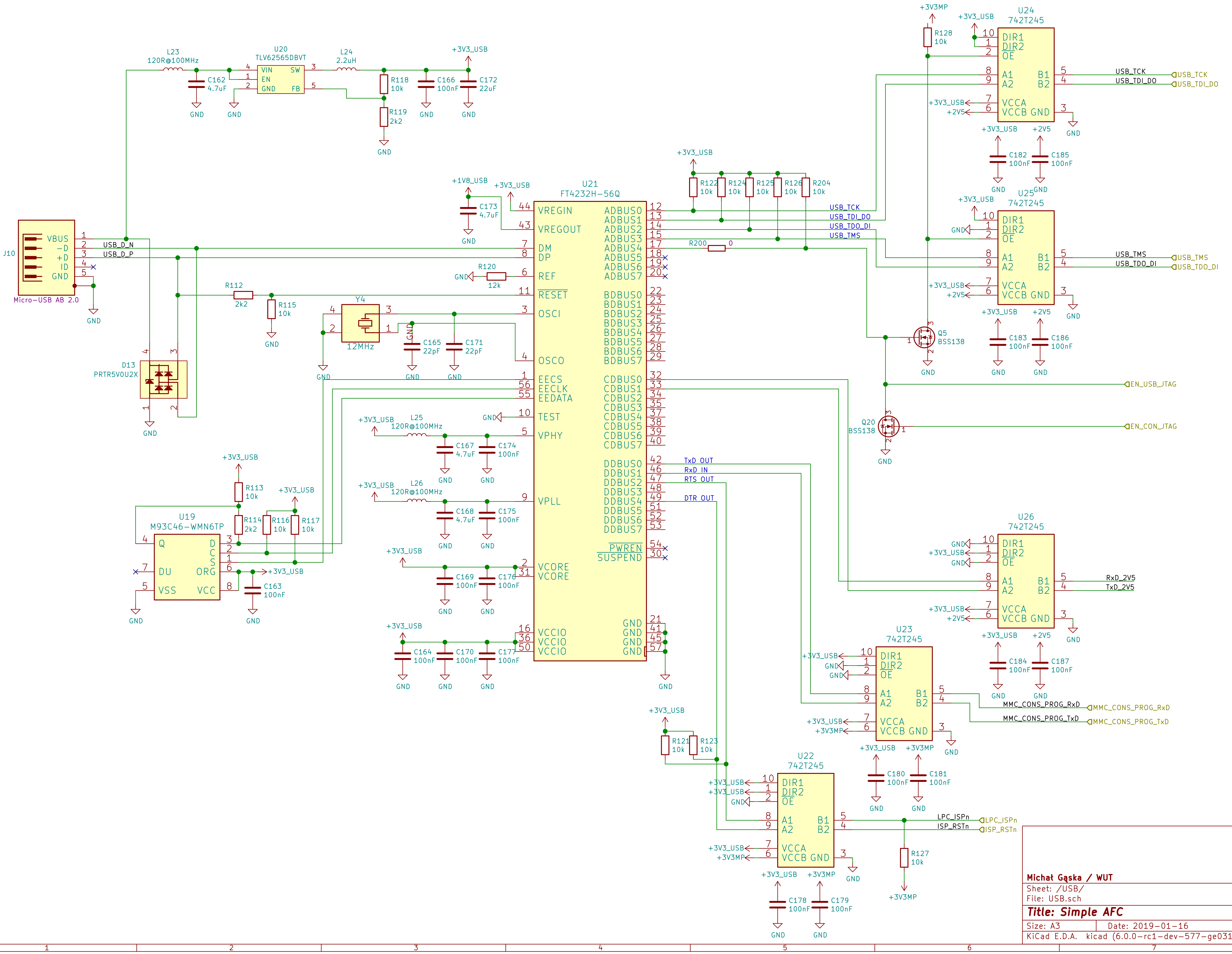
J10
Micro-USB AB 2.0
VBUS
-D
+D
ID
GND
USB_D_N
USB_D_P
L23
120R@100MHz
C162
4.7uF
U20
TLV62565DBVT
VIN
EN
GND
SW
FB
L24
2.2uH
R118
10k
R119
2k2
C166
100nF
C172
22uF
+3V3_USB
+1V8_USB
GND
D13
PRTR5V0U2X
R112
2k2
R115
10k
Y4
12MHz
C165
22pF
C171
22pF
R120
12k
U21
FT4232H-56Q
VREGIN
VREGOUT
DM
DP
REF
RESET
OSCI
OSCO
EECS
EECLK
EEDATA
TEST
VPHY
VPLL
VCORE
VCCIO
ADBUS0
ADBUS1
ADBUS2
ADBUS3
ADBUS4
ADBUS5
ADBUS6
ADBUS7
BDBUS0
BDBUS1
BDBUS2
BDBUS3
BDBUS4
BDBUS5
BDBUS6
BDBUS7
CDBUS0
CDBUS1
CDBUS2
CDBUS3
CDBUS4
CDBUS5
CDBUS6
CDBUS7
DDBUS0
DDBUS1
DDBUS2
DDBUS3
DDBUS4
DDBUS5
DDBUS6
DDBUS7
PWREN
SUSPEND
C173
4.7uF
L25
120R@100MHz
C167
4.7uF
C174
100nF
L26
120R@100MHz
C168
4.7uF
C175
100nF
C169
100nF
C176
100nF
C164
100nF
C170
100nF
C177
100nF
U19
M93C46-WMN6TP
Q
D
C
S
DU
ORG
VSS
VCC
R113
10k
R114
2k2
R116
10k
R117
10k
C163
100nF
R122
10k
R124
10k
R125
10k
R126
10k
R204
10k
R200
0
USB_TCK
USB_TDI_DO
USB_TDO_DI
USB_TMS
TxD OUT
RxD IN
RTS OUT
DTR OUT
+3V3MP
R128
10k
U24
742T245
DIR1
DIR2
OE
A1
A2
B1
B2
VCCA
VCCB
+2V5
C182
100nF
C185
100nF
U25
742T245
C183
100nF
C186
100nF
Q5
BSS138
Q20
BSS138
EN_USB_JTAG
EN_CON_JTAG
U26
742T245
RxD_2V5
TxD_2V5
C184
100nF
C187
100nF
U23
742T245
MMC_CONS_PROG_RxD
MMC_CONS_PROG_TxD
C180
100nF
C181
100nF
R121
10k
R123
10k
U22
742T245
LPC_ISPn
ISP_RSTn
R127
10k
C178
100nF
C179
100nF

Michał Gąska / WUT
Sheet: /USB/
File: USB.sch

Title: Simple AFC

Size: A3	Date: 2019-01-16	**Rev: 9**
KiCad E.D.A. kicad (6.0.0-rc1-dev-577-ge0316af69)		Id: 16/25

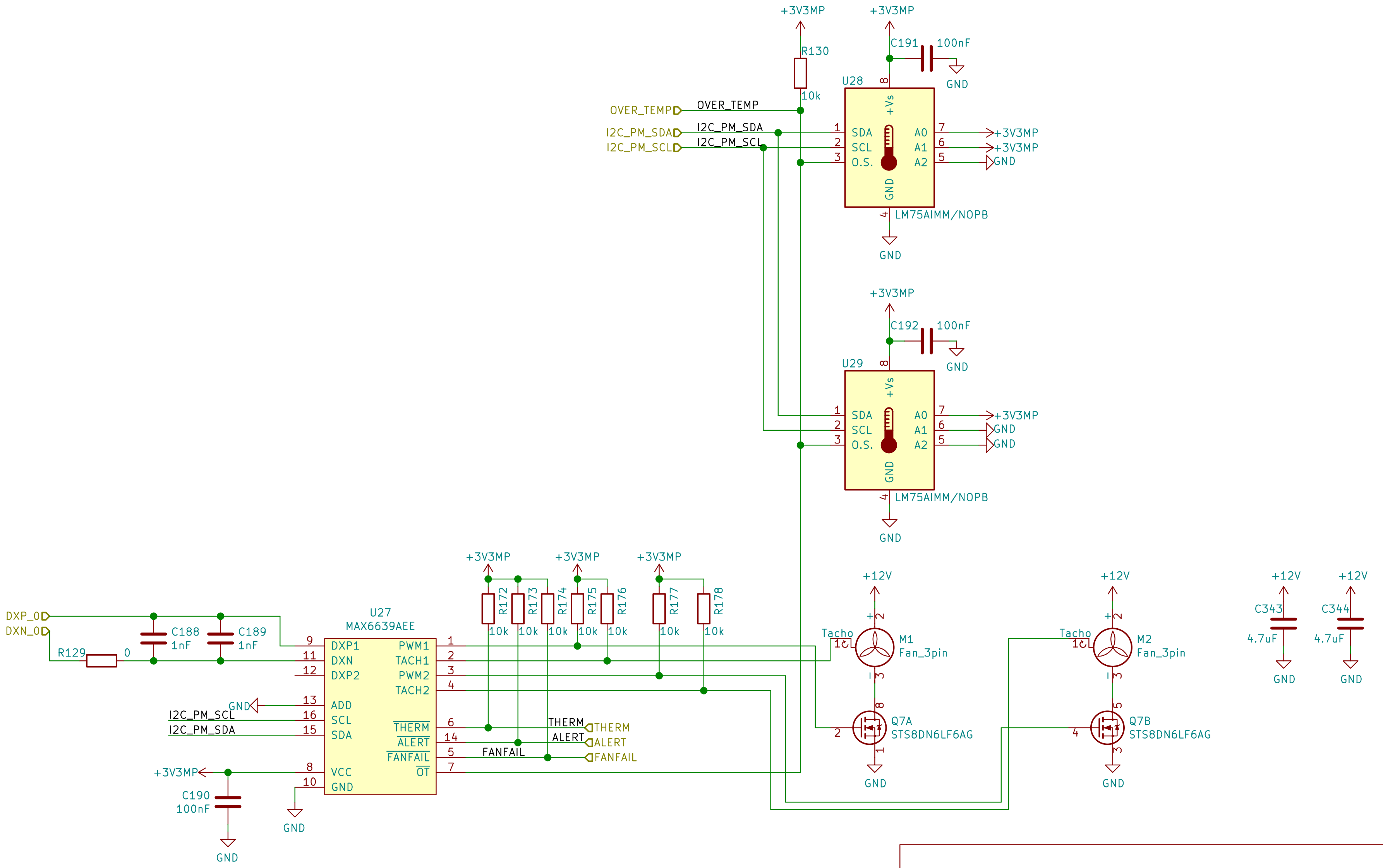
+3V3MP
R130
10k
OVER_TEMP
OVER_TEMP
I2C_PM_SDA
I2C_PM_SDA
I2C_PM_SCL
I2C_PM_SCL
+3V3MP
C191
100nF
GND
U28
+Vs
SDA
SCL
O.S.
A0
A1
A2
GND
+3V3MP
+3V3MP
GND
LM75AIMM/NOPB
GND
+3V3MP
C192
100nF
GND
U29
+Vs
SDA
SCL
O.S.
A0
A1
A2
GND
+3V3MP
GND
GND
LM75AIMM/NOPB
GND
+3V3MP
+3V3MP
+3V3MP
R172
R173
R174
R175
R176
R177
R178
10k
DXP_0
DXN_0
C188
1nF
C189
1nF
R129
0
U27
MAX6639AEE
DXP1
DXN
DXP2
ADD
SCL
SDA
VCC
GND
PWM1
TACH1
PWM2
TACH2
THERM
ALERT
FANFAIL
OT
GND
I2C_PM_SCL
I2C_PM_SDA
+3V3MP
C190
100nF
GND
GND
THERM
THERM
ALERT
ALERT
FANFAIL
FANFAIL
+12V
Tacho
M1
Fan_3pin
Q7A
STS8DN6LF6AG
GND
+12V
Tacho
M2
Fan_3pin
Q7B
STS8DN6LF6AG
GND
+12V
C343
4.7uF
GND
+12V
C344
4.7uF
GND

Michał Gąska / WUT

Sheet: /Thermometers/
File: Thermometers.sch

Title: Simple AFC

Size: A4	Date: 2019-01-16	**Rev: 9**
KiCad E.D.A. kicad (6.0.0-rc1-dev-577-ge0316af69)		Id: 17/25

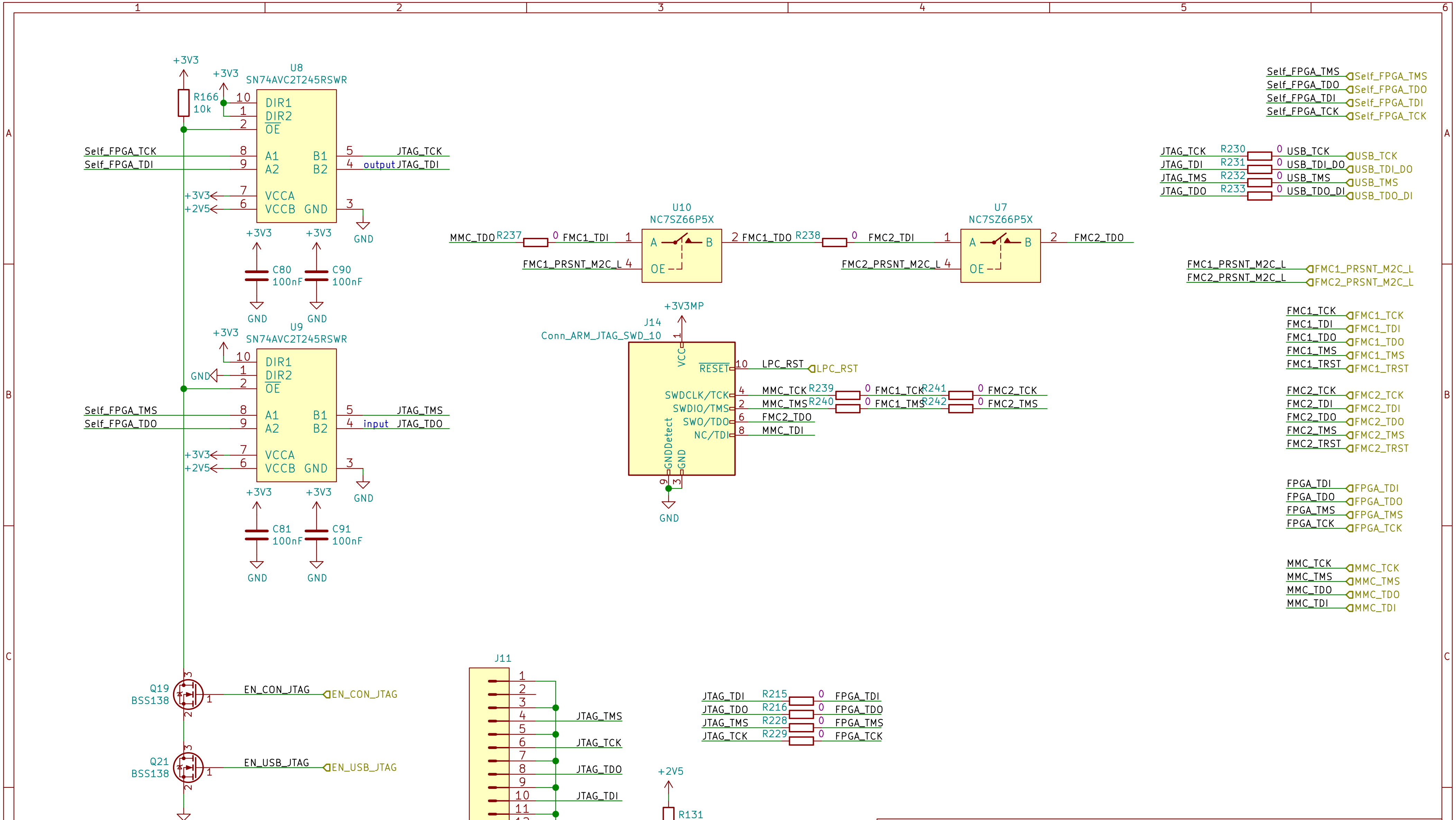
1
2
3
4
5
6
A
B
C
D
+3V3
R166
10k
U8
SN74AVC2T245RSWR
DIR1
DIR2
OE
A1
A2
B1
B2
VCCA
VCCB
GND
Self_FPGA_TCK
Self_FPGA_TDI
JTAG_TCK
output
JTAG_TDI
+2V5
C80
100nF
C90
100nF
GND
U9
SN74AVC2T245RSWR
Self_FPGA_TMS
Self_FPGA_TDO
JTAG_TMS
input
JTAG_TDO
C81
100nF
C91
100nF
Q19
BSS138
EN_CON_JTAG
Q21
BSS138
EN_USB_JTAG
U10
NC7SZ66P5X
MMC_TDO
R237
0
FMC1_TDI
FMC1_TDO
R238
FMC2_TDI
FMC1_PRSNT_M2C_L
U7
NC7SZ66P5X
FMC2_TDO
FMC2_PRSNT_M2C_L
+3V3MP
J14
Conn_ARM_JTAG_SWD_10
VCC
RESET
SWDCLK/TCK
SWDIO/TMS
SWO/TDO
NC/TDI
GNDDetect
LPC_RST
MMC_TCK
MMC_TMS
MMC_TDI
R239
R240
R241
R242
FMC1_TCK
FMC1_TMS
FMC2_TCK
FMC2_TMS
J11
JTAG_TMS
JTAG_TCK
JTAG_TDO
JTAG_TDI
R131
10k
C193
100nF
R215
R216
R228
R229
FPGA_TDI
FPGA_TDO
FPGA_TMS
FPGA_TCK
R230
R231
R232
R233
USB_TCK
USB_TDI_DO
USB_TMS
USB_TDO_DI
FMC1_TRST
FMC2_TRST

Michał Gąska / WUT

Sheet: /JTAG/

File: JTAG.sch

Title: Simple AFC

Size: A4	Date: 2019-01-16	**Rev: 9**
KiCad E.D.A.	kicad (6.0.0-rc1-dev-577-ge0316af69)	Id: 18/25

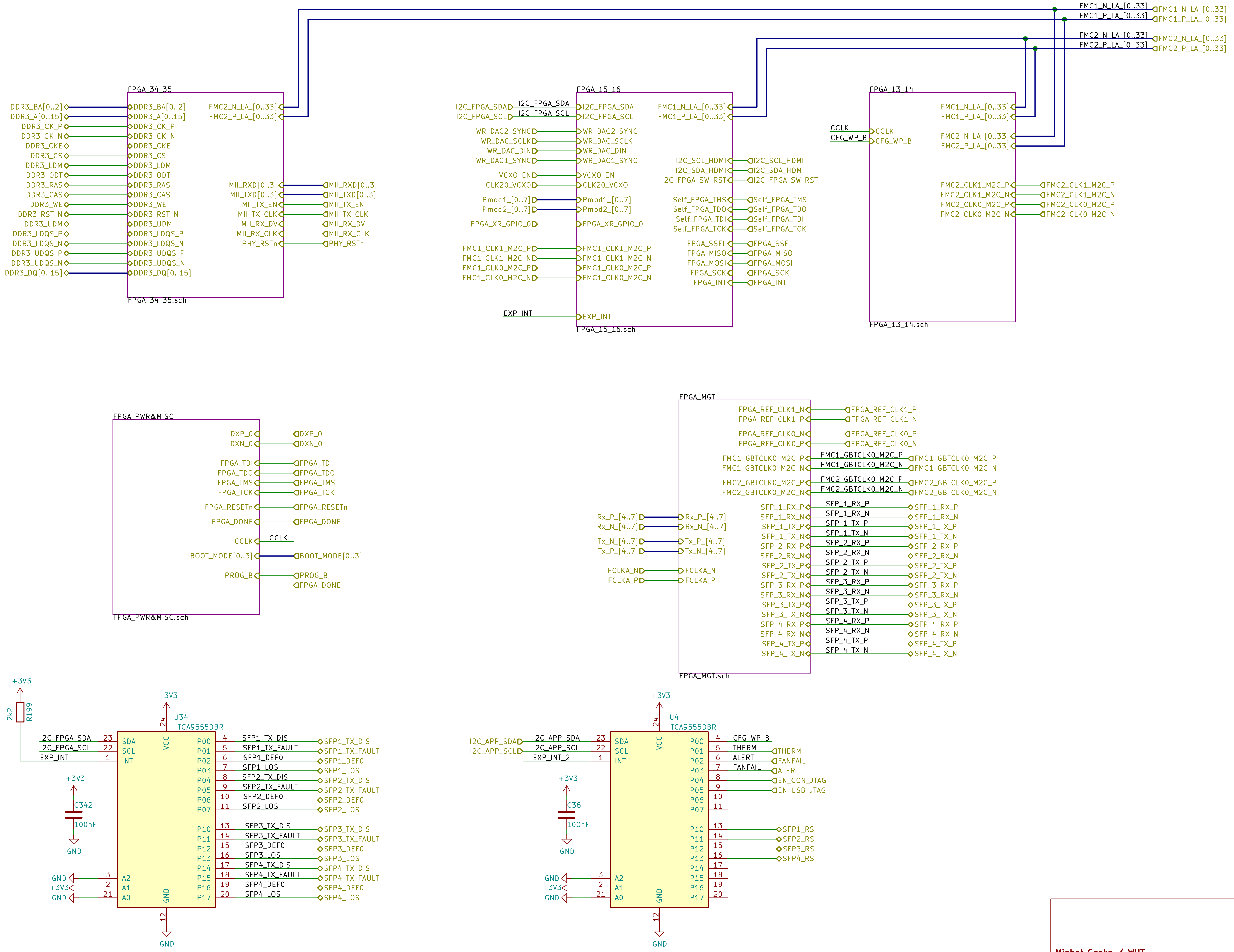
FMC1_N_LA_[0..33]
FMC1_P_LA_[0..33]
FMC2_N_LA_[0..33]
FMC2_P_LA_[0..33]
FPGA_34_35
FPGA_34_35.sch
DDR3_BA[0..2]
DDR3_A[0..15]
DDR3_CK_P
DDR3_CK_N
DDR3_CKE
DDR3_CS
DDR3_LDM
DDR3_ODT
DDR3_RAS
DDR3_CAS
DDR3_WE
DDR3_RST_N
DDR3_UDM
DDR3_LDQS_P
DDR3_LDQS_N
DDR3_UDQS_P
DDR3_UDQS_N
DDR3_DQ[0..15]
MII_RXD[0..3]
MII_TXD[0..3]
MII_TX_EN
MII_TX_CLK
MII_RX_DV
MII_RX_CLK
PHY_RSTn
FPGA_15_16
FPGA_15_16.sch
I2C_FPGA_SDA
I2C_FPGA_SCL
WR_DAC2_SYNC
WR_DAC_SCLK
WR_DAC_DIN
WR_DAC1_SYNC
VCXO_EN
CLK20_VCXO
Pmod1_[0..7]
Pmod2_[0..7]
FPGA_XR_GPIO_0
FMC1_CLK1_M2C_P
FMC1_CLK1_M2C_N
FMC1_CLK0_M2C_P
FMC1_CLK0_M2C_N
EXP_INT
I2C_SCL_HDMI
I2C_SDA_HDMI
I2C_FPGA_SW_RST
Self_FPGA_TMS
Self_FPGA_TDO
Self_FPGA_TDI
Self_FPGA_TCK
FPGA_SSEL
FPGA_MISO
FPGA_MOSI
FPGA_SCK
FPGA_INT
FPGA_13_14
FPGA_13_14.sch
CCLK
CFG_WP_B
FMC2_CLK1_M2C_P
FMC2_CLK1_M2C_N
FMC2_CLK0_M2C_P
FMC2_CLK0_M2C_N
FPGA_PWR&MISC
FPGA_PWR&MISC.sch
DXP_0
DXN_0
FPGA_TDI
FPGA_TDO
FPGA_TMS
FPGA_TCK
FPGA_RESETn
FPGA_DONE
BOOT_MODE[0..3]
PROG_B
FPGA_MGT
FPGA_MGT.sch
FPGA_REF_CLK1_N
FPGA_REF_CLK1_P
FPGA_REF_CLK0_N
FPGA_REF_CLK0_P
FMC1_GBTCLK0_M2C_P
FMC1_GBTCLK0_M2C_N
FMC2_GBTCLK0_M2C_P
FMC2_GBTCLK0_M2C_N
Rx_P_[4..7]
Rx_N_[4..7]
Tx_N_[4..7]
Tx_P_[4..7]
FCLKA_N
FCLKA_P
SFP_1_RX_P
SFP_1_RX_N
SFP_1_TX_P
SFP_1_TX_N
SFP_2_RX_P
SFP_2_RX_N
SFP_2_TX_P
SFP_2_TX_N
SFP_3_RX_P
SFP_3_RX_N
SFP_3_TX_P
SFP_3_TX_N
SFP_4_RX_P
SFP_4_RX_N
SFP_4_TX_P
SFP_4_TX_N
+3V3
R199
2k2
U34
TCA9555DBR
SDA
SCL
INT
VCC
GND
A2
A1
A0
P00
P01
P02
P03
P04
P05
P06
P07
P10
P11
P12
P13
P14
P15
P16
P17
SFP1_TX_DIS
SFP1_TX_FAULT
SFP1_DEF0
SFP1_LOS
SFP2_TX_DIS
SFP2_TX_FAULT
SFP2_DEF0
SFP2_LOS
SFP3_TX_DIS
SFP3_TX_FAULT
SFP3_DEF0
SFP3_LOS
SFP4_TX_DIS
SFP4_TX_FAULT
SFP4_DEF0
SFP4_LOS
C342
100nF
U4
I2C_APP_SDA
I2C_APP_SCL
EXP_INT_2
THERM
FANFAIL
ALERT
EN_CON_JTAG
EN_USB_JTAG
SFP1_RS
SFP2_RS
SFP3_RS
SFP4_RS
C36

Michał Gąska / WUT

Sheet: /FPGA/
File: FPGA.sch

Title: Simple AFC

Size: A3	Date: 2019-01-16	**Rev: 9**
KiCad E.D.A. kicad (6.0.0-rc1-dev-577-ge0316af69)		Id: 19/25

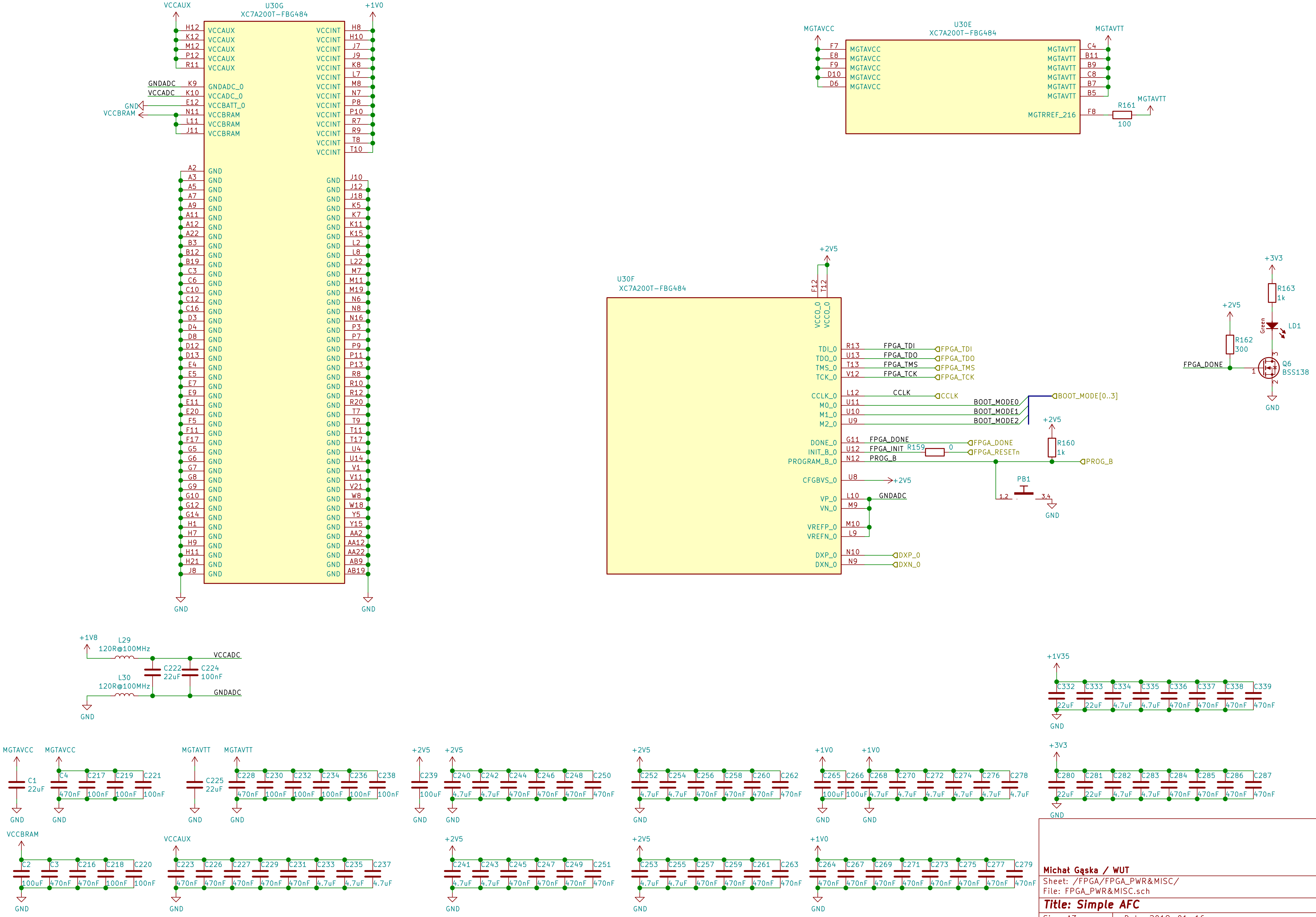
U30G
XC7A200T-FBG484
VCCAUX
+1V0
VCCAUX
VCCINT
GNDADC
VCCADC
GND
VCCBRAM
GNDADC_0
VCCADC_0
VCCBATT_0
VCCBRAM
GND
U30E
XC7A200T-FBG484
MGTAVCC
MGTAVTT
MGTRREF_216
R161
100
U30F
XC7A200T-FBG484
+2V5
VCCO_0
TDI_0
TDO_0
TMS_0
TCK_0
FPGA_TDI
FPGA_TDO
FPGA_TMS
FPGA_TCK
CCLK_0
M0_0
M1_0
M2_0
CCLK
BOOT_MODE0
BOOT_MODE1
BOOT_MODE2
BOOT_MODE[0..3]
DONE_0
INIT_B_0
PROGRAM_B_0
FPGA_DONE
FPGA_INIT
R159
0
FPGA_RESETn
PROG_B
R160
1k
PB1
CFGBVS_0
VP_0
VN_0
VREFP_0
VREFN_0
DXP_0
DXN_0
+3V3
R163
1k
Green
LD1
R162
300
Q6
BSS138
+1V8
L29
120R@100MHz
L30
120R@100MHz
C222
22uF
C224
100nF
+1V35
C332 … C339
C1
22uF
C4
C217
C219
C221
C225
22uF
C228 … C238
C239
100uF
C240 … C250
C252 … C262
C265
C266
C268 … C278
C280 … C287
C2
C3
C216
C218
C220
C223 … C237
C241 … C251
C253 … C263
C264 … C279
470nF
100nF
4.7uF

Michał Gąska / WUT

Sheet: /FPGA/FPGA_PWR&MISC/
File: FPGA_PWR&MISC.sch

Title: Simple AFC

Size: A3 Date: 2019-01-16 Rev: 9
KiCad E.D.A. kicad (6.0.0-rc1-dev-577-ge0316af69) Id: 20/25

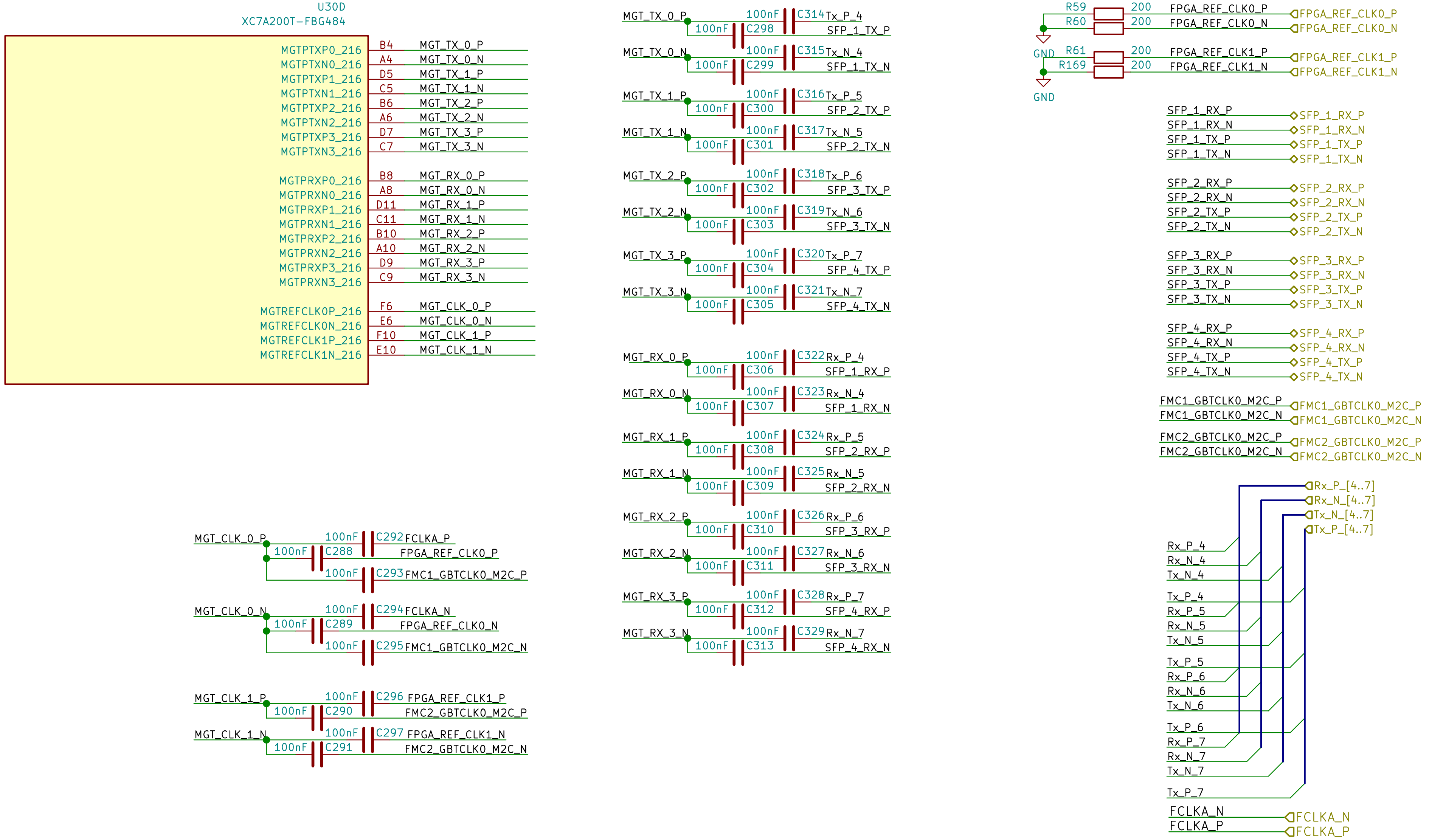
U30D
XC7A200T-FBG484
MGTPTXP0_216 B4 MGT_TX_0_P
MGTPTXN0_216 A4 MGT_TX_0_N
MGTPTXP1_216 D5 MGT_TX_1_P
MGTPTXN1_216 C5 MGT_TX_1_N
MGTPTXP2_216 B6 MGT_TX_2_P
MGTPTXN2_216 A6 MGT_TX_2_N
MGTPTXP3_216 D7 MGT_TX_3_P
MGTPTXN3_216 C7 MGT_TX_3_N
MGTPRXP0_216 B8 MGT_RX_0_P
MGTPRXN0_216 A8 MGT_RX_0_N
MGTPRXP1_216 D11 MGT_RX_1_P
MGTPRXN1_216 C11 MGT_RX_1_N
MGTPRXP2_216 B10 MGT_RX_2_P
MGTPRXN2_216 A10 MGT_RX_2_N
MGTPRXP3_216 D9 MGT_RX_3_P
MGTPRXN3_216 C9 MGT_RX_3_N
MGTREFCLK0P_216 F6 MGT_CLK_0_P
MGTREFCLK0N_216 E6 MGT_CLK_0_N
MGTREFCLK1P_216 F10 MGT_CLK_1_P
MGTREFCLK1N_216 E10 MGT_CLK_1_N
MGT_CLK_0_P 100nF C292 FCLKA_P
100nF C288 FPGA_REF_CLK0_P
100nF C293 FMC1_GBTCLK0_M2C_P
MGT_CLK_0_N 100nF C294 FCLKA_N
100nF C289 FPGA_REF_CLK0_N
100nF C295 FMC1_GBTCLK0_M2C_N
MGT_CLK_1_P 100nF C296 FPGA_REF_CLK1_P
100nF C290 FMC2_GBTCLK0_M2C_P
MGT_CLK_1_N 100nF C297 FPGA_REF_CLK1_N
100nF C291 FMC2_GBTCLK0_M2C_N
MGT_TX_0_P 100nF C314 Tx_P_4
100nF C298 SFP_1_TX_P
MGT_TX_0_N 100nF C315 Tx_N_4
100nF C299 SFP_1_TX_N
MGT_TX_1_P 100nF C316 Tx_P_5
100nF C300 SFP_2_TX_P
MGT_TX_1_N 100nF C317 Tx_N_5
100nF C301 SFP_2_TX_N
MGT_TX_2_P 100nF C318 Tx_P_6
100nF C302 SFP_3_TX_P
MGT_TX_2_N 100nF C319 Tx_N_6
100nF C303 SFP_3_TX_N
MGT_TX_3_P 100nF C320 Tx_P_7
100nF C304 SFP_4_TX_P
MGT_TX_3_N 100nF C321 Tx_N_7
100nF C305 SFP_4_TX_N
MGT_RX_0_P 100nF C322 Rx_P_4
100nF C306 SFP_1_RX_P
MGT_RX_0_N 100nF C323 Rx_N_4
100nF C307 SFP_1_RX_N
MGT_RX_1_P 100nF C324 Rx_P_5
100nF C308 SFP_2_RX_P
MGT_RX_1_N 100nF C325 Rx_N_5
100nF C309 SFP_2_RX_N
MGT_RX_2_P 100nF C326 Rx_P_6
100nF C310 SFP_3_RX_P
MGT_RX_2_N 100nF C327 Rx_N_6
100nF C311 SFP_3_RX_N
MGT_RX_3_P 100nF C328 Rx_P_7
100nF C312 SFP_4_RX_P
MGT_RX_3_N 100nF C329 Rx_N_7
100nF C313 SFP_4_RX_N
R59 200 FPGA_REF_CLK0_P FPGA_REF_CLK0_P
R60 200 FPGA_REF_CLK0_N FPGA_REF_CLK0_N
GND R61 200 FPGA_REF_CLK1_P FPGA_REF_CLK1_P
R169 200 FPGA_REF_CLK1_N FPGA_REF_CLK1_N
GND
SFP_1_RX_P SFP_1_RX_P
SFP_1_RX_N SFP_1_RX_N
SFP_1_TX_P SFP_1_TX_P
SFP_1_TX_N SFP_1_TX_N
SFP_2_RX_P SFP_2_RX_P
SFP_2_RX_N SFP_2_RX_N
SFP_2_TX_P SFP_2_TX_P
SFP_2_TX_N SFP_2_TX_N
SFP_3_RX_P SFP_3_RX_P
SFP_3_RX_N SFP_3_RX_N
SFP_3_TX_P SFP_3_TX_P
SFP_3_TX_N SFP_3_TX_N
SFP_4_RX_P SFP_4_RX_P
SFP_4_RX_N SFP_4_RX_N
SFP_4_TX_P SFP_4_TX_P
SFP_4_TX_N SFP_4_TX_N
FMC1_GBTCLK0_M2C_P FMC1_GBTCLK0_M2C_P
FMC1_GBTCLK0_M2C_N FMC1_GBTCLK0_M2C_N
FMC2_GBTCLK0_M2C_P FMC2_GBTCLK0_M2C_P
FMC2_GBTCLK0_M2C_N FMC2_GBTCLK0_M2C_N
Rx_P_[4..7]
Rx_N_[4..7]
Tx_N_[4..7]
Tx_P_[4..7]
Rx_P_4
Rx_N_4
Tx_N_4
Tx_P_4
Rx_P_5
Rx_N_5
Tx_N_5
Tx_P_5
Rx_P_6
Rx_N_6
Tx_N_6
Tx_P_6
Rx_P_7
Rx_N_7
Tx_N_7
Tx_P_7
FCLKA_N FCLKA_N
FCLKA_P FCLKA_P

Michał Gąska / WUT

Sheet: /FPGA/FPGA_MGT/

File: FPGA_MGT.sch

Title: Simple AFC

Size: A4	Date: 2019-01-16	**Rev: 9**
KiCad E.D.A. kicad (6.0.0-rc1-dev-577-ge0316af69)		Id: 21/25

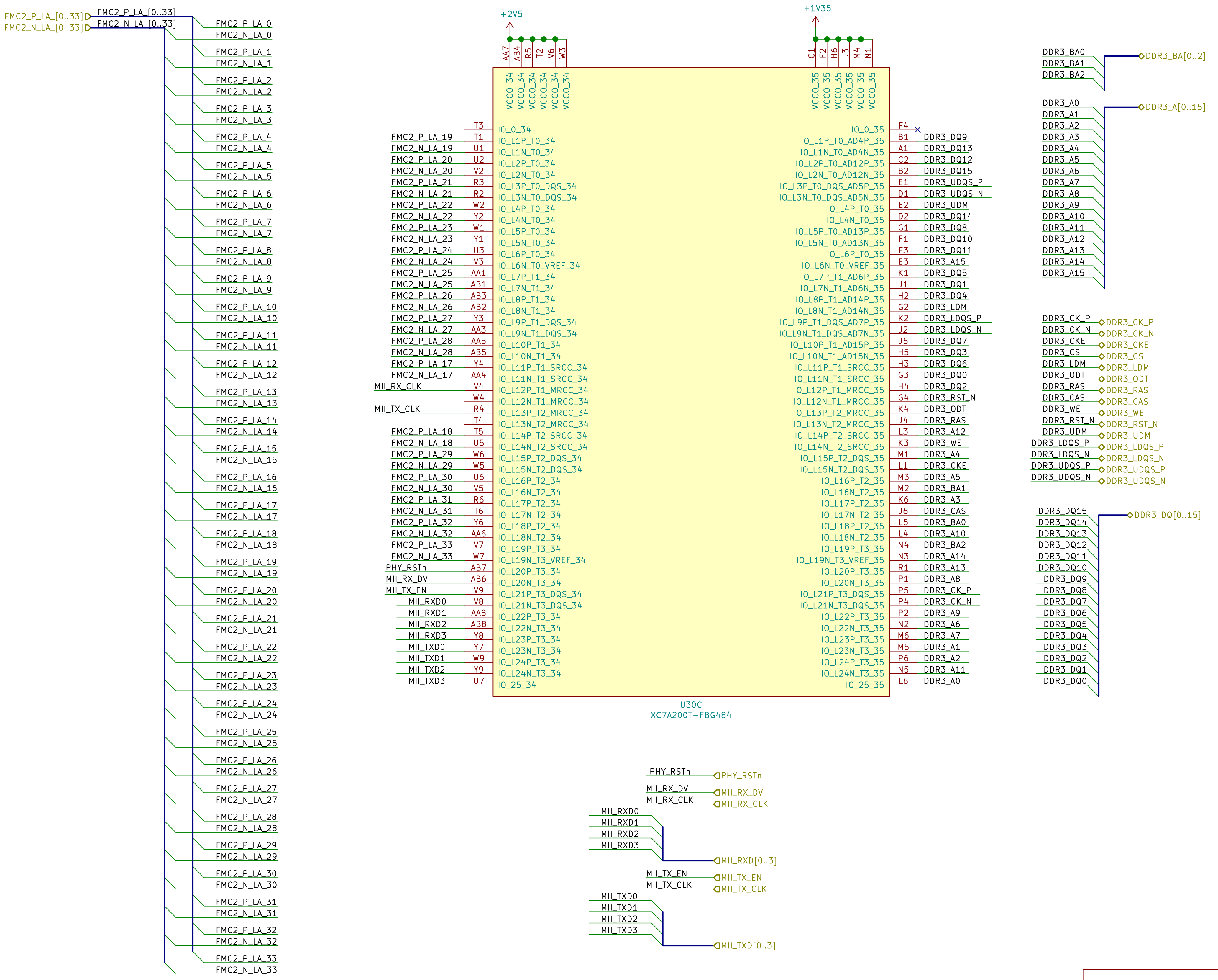
FMC2_P_LA_[0..33]
FMC2_N_LA_[0..33]
FMC2_P_LA_0
FMC2_N_LA_0
FMC2_P_LA_1
FMC2_N_LA_1
FMC2_P_LA_2
FMC2_N_LA_2
FMC2_P_LA_3
FMC2_N_LA_3
FMC2_P_LA_4
FMC2_N_LA_4
FMC2_P_LA_5
FMC2_N_LA_5
FMC2_P_LA_6
FMC2_N_LA_6
FMC2_P_LA_7
FMC2_N_LA_7
FMC2_P_LA_8
FMC2_N_LA_8
FMC2_P_LA_9
FMC2_N_LA_9
FMC2_P_LA_10
FMC2_N_LA_10
FMC2_P_LA_11
FMC2_N_LA_11
FMC2_P_LA_12
FMC2_N_LA_12
FMC2_P_LA_13
FMC2_N_LA_13
FMC2_P_LA_14
FMC2_N_LA_14
FMC2_P_LA_15
FMC2_N_LA_15
FMC2_P_LA_16
FMC2_N_LA_16
FMC2_P_LA_17
FMC2_N_LA_17
FMC2_P_LA_18
FMC2_N_LA_18
FMC2_P_LA_19
FMC2_N_LA_19
FMC2_P_LA_20
FMC2_N_LA_20
FMC2_P_LA_21
FMC2_N_LA_21
FMC2_P_LA_22
FMC2_N_LA_22
FMC2_P_LA_23
FMC2_N_LA_23
FMC2_P_LA_24
FMC2_N_LA_24
FMC2_P_LA_25
FMC2_N_LA_25
FMC2_P_LA_26
FMC2_N_LA_26
FMC2_P_LA_27
FMC2_N_LA_27
FMC2_P_LA_28
FMC2_N_LA_28
FMC2_P_LA_29
FMC2_N_LA_29
FMC2_P_LA_30
FMC2_N_LA_30
FMC2_P_LA_31
FMC2_N_LA_31
FMC2_P_LA_32
FMC2_N_LA_32
FMC2_P_LA_33
FMC2_N_LA_33
+2V5
AA7 AB4 R5 T2 V6 W3
VCCO_34 VCCO_34 VCCO_34 VCCO_34 VCCO_34 VCCO_34
+1V35
C1 F2 H6 J3 M4 N1
VCCO_35 VCCO_35 VCCO_35 VCCO_35 VCCO_35 VCCO_35
T3 IO_0_34
FMC2_P_LA_19 T1 IO_L1P_T0_34
FMC2_N_LA_19 U1 IO_L1N_T0_34
FMC2_P_LA_20 U2 IO_L2P_T0_34
FMC2_N_LA_20 V2 IO_L2N_T0_34
FMC2_P_LA_21 R3 IO_L3P_T0_DQS_34
FMC2_N_LA_21 R2 IO_L3N_T0_DQS_34
FMC2_P_LA_22 W2 IO_L4P_T0_34
FMC2_N_LA_22 Y2 IO_L4N_T0_34
FMC2_P_LA_23 W1 IO_L5P_T0_34
FMC2_N_LA_23 Y1 IO_L5N_T0_34
FMC2_P_LA_24 U3 IO_L6P_T0_34
FMC2_N_LA_24 V3 IO_L6N_T0_VREF_34
FMC2_P_LA_25 AA1 IO_L7P_T1_34
FMC2_N_LA_25 AB1 IO_L7N_T1_34
FMC2_P_LA_26 AB3 IO_L8P_T1_34
FMC2_N_LA_26 AB2 IO_L8N_T1_34
FMC2_P_LA_27 Y3 IO_L9P_T1_DQS_34
FMC2_N_LA_27 AA3 IO_L9N_T1_DQS_34
FMC2_P_LA_28 AA5 IO_L10P_T1_34
FMC2_N_LA_28 AB5 IO_L10N_T1_34
FMC2_P_LA_17 Y4 IO_L11P_T1_SRCC_34
FMC2_N_LA_17 AA4 IO_L11N_T1_SRCC_34
MII_RX_CLK V4 IO_L12P_T1_MRCC_34
W4 IO_L12N_T1_MRCC_34
MII_TX_CLK R4 IO_L13P_T2_MRCC_34
T4 IO_L13N_T2_MRCC_34
FMC2_P_LA_18 T5 IO_L14P_T2_SRCC_34
FMC2_N_LA_18 U5 IO_L14N_T2_SRCC_34
FMC2_P_LA_29 W6 IO_L15P_T2_DQS_34
FMC2_N_LA_29 W5 IO_L15N_T2_DQS_34
FMC2_P_LA_30 U6 IO_L16P_T2_34
FMC2_N_LA_30 V5 IO_L16N_T2_34
FMC2_P_LA_31 R6 IO_L17P_T2_34
FMC2_N_LA_31 T6 IO_L17N_T2_34
FMC2_P_LA_32 Y6 IO_L18P_T2_34
FMC2_N_LA_32 AA6 IO_L18N_T2_34
FMC2_P_LA_33 V7 IO_L19P_T3_34
FMC2_N_LA_33 W7 IO_L19N_T3_VREF_34
PHY_RSTn AB7 IO_L20P_T3_34
MII_RX_DV AB6 IO_L20N_T3_34
MII_TX_EN V9 IO_L21P_T3_DQS_34
MII_RXD0 V8 IO_L21N_T3_DQS_34
MII_RXD1 AA8 IO_L22P_T3_34
MII_RXD2 AB8 IO_L22N_T3_34
MII_RXD3 Y8 IO_L23P_T3_34
MII_TXD0 Y7 IO_L23N_T3_34
MII_TXD1 W9 IO_L24P_T3_34
MII_TXD2 Y9 IO_L24N_T3_34
MII_TXD3 U7 IO_25_34
IO_0_35 F4
IO_L1P_T0_AD4P_35 B1 DDR3_DQ9
IO_L1N_T0_AD4N_35 A1 DDR3_DQ13
IO_L2P_T0_AD12P_35 C2 DDR3_DQ12
IO_L2N_T0_AD12N_35 B2 DDR3_DQ15
IO_L3P_T0_DQS_AD5P_35 E1 DDR3_UDQS_P
IO_L3N_T0_DQS_AD5N_35 D1 DDR3_UDQS_N
IO_L4P_T0_35 E2 DDR3_UDM
IO_L4N_T0_35 D2 DDR3_DQ14
IO_L5P_T0_AD13P_35 G1 DDR3_DQ8
IO_L5N_T0_AD13N_35 F1 DDR3_DQ10
IO_L6P_T0_35 F3 DDR3_DQ11
IO_L6N_T0_VREF_35 E3 DDR3_A15
IO_L7P_T1_AD6P_35 K1 DDR3_DQ5
IO_L7N_T1_AD6N_35 J1 DDR3_DQ1
IO_L8P_T1_AD14P_35 H2 DDR3_DQ4
IO_L8N_T1_AD14N_35 G2 DDR3_LDM
IO_L9P_T1_DQS_AD7P_35 K2 DDR3_LDQS_P
IO_L9N_T1_DQS_AD7N_35 J2 DDR3_LDQS_N
IO_L10P_T1_AD15P_35 J5 DDR3_DQ7
IO_L10N_T1_AD15N_35 H5 DDR3_DQ3
IO_L11P_T1_SRCC_35 H3 DDR3_DQ6
IO_L11N_T1_SRCC_35 G3 DDR3_DQ0
IO_L12P_T1_MRCC_35 H4 DDR3_DQ2
IO_L12N_T1_MRCC_35 G4 DDR3_RST_N
IO_L13P_T2_MRCC_35 K4 DDR3_ODT
IO_L13N_T2_MRCC_35 J4 DDR3_RAS
IO_L14P_T2_SRCC_35 L3 DDR3_A12
IO_L14N_T2_SRCC_35 K3 DDR3_WE
IO_L15P_T2_DQS_35 M1 DDR3_A4
IO_L15N_T2_DQS_35 L1 DDR3_CKE
IO_L16P_T2_35 M3 DDR3_A5
IO_L16N_T2_35 M2 DDR3_BA1
IO_L17P_T2_35 K6 DDR3_A3
IO_L17N_T2_35 J6 DDR3_CAS
IO_L18P_T2_35 L5 DDR3_BA0
IO_L18N_T2_35 L4 DDR3_A10
IO_L19P_T3_35 N4 DDR3_BA2
IO_L19N_T3_VREF_35 N3 DDR3_A14
IO_L20P_T3_35 R1 DDR3_A13
IO_L20N_T3_35 P1 DDR3_A8
IO_L21P_T3_DQS_35 P5 DDR3_CK_P
IO_L21N_T3_DQS_35 P4 DDR3_CK_N
IO_L22P_T3_35 P2 DDR3_A9
IO_L22N_T3_35 N2 DDR3_A6
IO_L23P_T3_35 M6 DDR3_A7
IO_L23N_T3_35 M5 DDR3_A1
IO_L24P_T3_35 P6 DDR3_A2
IO_L24N_T3_35 N5 DDR3_A11
IO_25_35 L6 DDR3_A0
U30C
XC7A200T-FBG484
DDR3_BA0
DDR3_BA1
DDR3_BA2
DDR3_BA[0..2]
DDR3_A0
DDR3_A1
DDR3_A2
DDR3_A3
DDR3_A4
DDR3_A5
DDR3_A6
DDR3_A7
DDR3_A8
DDR3_A9
DDR3_A10
DDR3_A11
DDR3_A12
DDR3_A13
DDR3_A14
DDR3_A15
DDR3_A[0..15]
DDR3_CK_P DDR3_CK_P
DDR3_CK_N DDR3_CK_N
DDR3_CKE DDR3_CKE
DDR3_CS DDR3_CS
DDR3_LDM DDR3_LDM
DDR3_ODT DDR3_ODT
DDR3_RAS DDR3_RAS
DDR3_CAS DDR3_CAS
DDR3_WE DDR3_WE
DDR3_RST_N DDR3_RST_N
DDR3_UDM DDR3_UDM
DDR3_LDQS_P DDR3_LDQS_P
DDR3_LDQS_N DDR3_LDQS_N
DDR3_UDQS_P DDR3_UDQS_P
DDR3_UDQS_N DDR3_UDQS_N
DDR3_DQ15
DDR3_DQ14
DDR3_DQ13
DDR3_DQ12
DDR3_DQ11
DDR3_DQ10
DDR3_DQ9
DDR3_DQ8
DDR3_DQ7
DDR3_DQ6
DDR3_DQ5
DDR3_DQ4
DDR3_DQ3
DDR3_DQ2
DDR3_DQ1
DDR3_DQ0
DDR3_DQ[0..15]
PHY_RSTn PHY_RSTn
MII_RX_DV MII_RX_DV
MII_RX_CLK MII_RX_CLK
MII_RXD0
MII_RXD1
MII_RXD2
MII_RXD3
MII_RXD[0..3]
MII_TX_EN MII_TX_EN
MII_TX_CLK MII_TX_CLK
MII_TXD0
MII_TXD1
MII_TXD2
MII_TXD3
MII_TXD[0..3]

Michał Gąska / WUT
Sheet: /FPGA/FPGA_34_35/
File: FPGA_34_35.sch

Title: Simple AFC

Size: A3 Date: 2019-01-16 **Rev: 9**
KiCad E.D.A. kicad (6.0.0-rc1-dev-577-ge0316af69) Id: 22/25

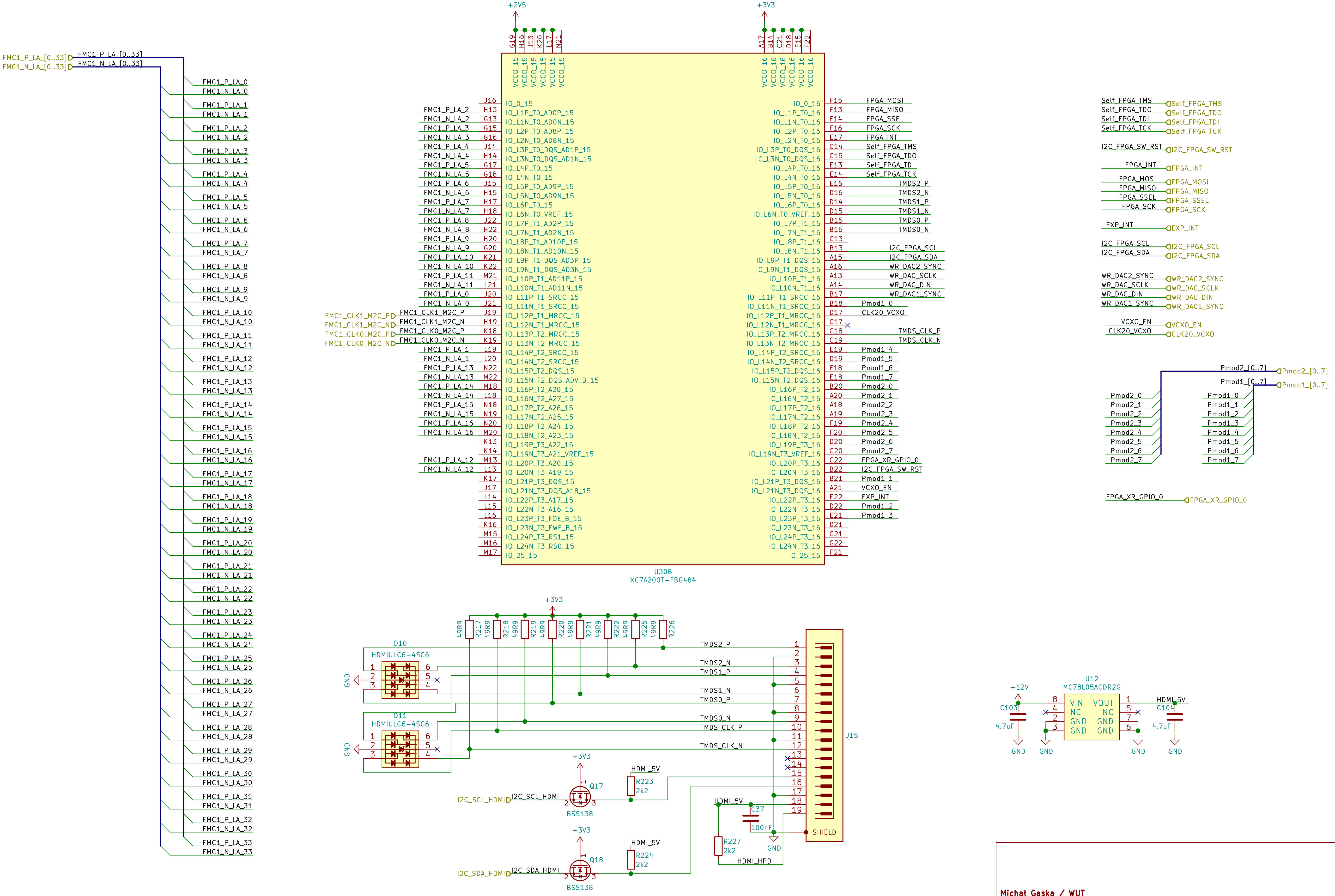
FMC1_P_LA_[0..33]
FMC1_N_LA_[0..33]
FMC1_P_LA_0
FMC1_N_LA_0
FMC1_P_LA_1
FMC1_N_LA_1
FMC1_P_LA_2
FMC1_N_LA_2
FMC1_P_LA_3
FMC1_N_LA_3
FMC1_P_LA_4
FMC1_N_LA_4
FMC1_P_LA_5
FMC1_N_LA_5
FMC1_P_LA_6
FMC1_N_LA_6
FMC1_P_LA_7
FMC1_N_LA_7
FMC1_P_LA_8
FMC1_N_LA_8
FMC1_P_LA_9
FMC1_N_LA_9
FMC1_P_LA_10
FMC1_N_LA_10
FMC1_P_LA_11
FMC1_N_LA_11
FMC1_P_LA_12
FMC1_N_LA_12
FMC1_P_LA_13
FMC1_N_LA_13
FMC1_P_LA_14
FMC1_N_LA_14
FMC1_P_LA_15
FMC1_N_LA_15
FMC1_P_LA_16
FMC1_N_LA_16
FMC1_P_LA_17
FMC1_N_LA_17
FMC1_P_LA_18
FMC1_N_LA_18
FMC1_P_LA_19
FMC1_N_LA_19
FMC1_P_LA_20
FMC1_N_LA_20
FMC1_P_LA_21
FMC1_N_LA_21
FMC1_P_LA_22
FMC1_N_LA_22
FMC1_P_LA_23
FMC1_N_LA_23
FMC1_P_LA_24
FMC1_N_LA_24
FMC1_P_LA_25
FMC1_N_LA_25
FMC1_P_LA_26
FMC1_N_LA_26
FMC1_P_LA_27
FMC1_N_LA_27
FMC1_P_LA_28
FMC1_N_LA_28
FMC1_P_LA_29
FMC1_N_LA_29
FMC1_P_LA_30
FMC1_N_LA_30
FMC1_P_LA_31
FMC1_N_LA_31
FMC1_P_LA_32
FMC1_N_LA_32
FMC1_P_LA_33
FMC1_N_LA_33
+2V5
G19 H16 J13 K20 L17 N21
VCCO_15 VCCO_15 VCCO_15 VCCO_15 VCCO_15 VCCO_15
+3V3
A17 B14 C21 D18 E15 F22
VCCO_16 VCCO_16 VCCO_16 VCCO_16 VCCO_16 VCCO_16
J16 IO_0_15
FMC1_P_LA_2 H13 IO_L1P_T0_AD0P_15
FMC1_N_LA_2 G13 IO_L1N_T0_AD0N_15
FMC1_P_LA_3 G15 IO_L2P_T0_AD8P_15
FMC1_N_LA_3 G16 IO_L2N_T0_AD8N_15
FMC1_P_LA_4 J14 IO_L3P_T0_DQS_AD1P_15
FMC1_N_LA_4 H14 IO_L3N_T0_DQS_AD1N_15
FMC1_P_LA_5 G17 IO_L4P_T0_15
FMC1_N_LA_5 G18 IO_L4N_T0_15
FMC1_P_LA_6 J15 IO_L5P_T0_AD9P_15
FMC1_N_LA_6 H15 IO_L5N_T0_AD9N_15
FMC1_P_LA_7 H17 IO_L6P_T0_15
FMC1_N_LA_7 H18 IO_L6N_T0_VREF_15
FMC1_P_LA_8 J22 IO_L7P_T1_AD2P_15
FMC1_N_LA_8 H22 IO_L7N_T1_AD2N_15
FMC1_P_LA_9 H20 IO_L8P_T1_AD10P_15
FMC1_N_LA_9 G20 IO_L8N_T1_AD10N_15
FMC1_P_LA_10 K21 IO_L9P_T1_DQS_AD3P_15
FMC1_N_LA_10 K22 IO_L9N_T1_DQS_AD3N_15
FMC1_P_LA_11 M21 IO_L10P_T1_AD11P_15
FMC1_N_LA_11 L21 IO_L10N_T1_AD11N_15
FMC1_P_LA_0 J20 IO_L11P_T1_SRCC_15
FMC1_N_LA_0 J21 IO_L11N_T1_SRCC_15
FMC1_CLK1_M2C_P FMC1_CLK1_M2C_P J19 IO_L12P_T1_MRCC_15
FMC1_CLK1_M2C_N FMC1_CLK1_M2C_N H19 IO_L12N_T1_MRCC_15
FMC1_CLK0_M2C_P FMC1_CLK0_M2C_P K18 IO_L13P_T2_MRCC_15
FMC1_CLK0_M2C_N FMC1_CLK0_M2C_N K19 IO_L13N_T2_MRCC_15
FMC1_P_LA_1 L19 IO_L14P_T2_SRCC_15
FMC1_N_LA_1 L20 IO_L14N_T2_SRCC_15
FMC1_P_LA_13 N22 IO_L15P_T2_DQS_15
FMC1_N_LA_13 M22 IO_L15N_T2_DQS_ADV_B_15
FMC1_P_LA_14 M18 IO_L16P_T2_A28_15
FMC1_N_LA_14 L18 IO_L16N_T2_A27_15
FMC1_P_LA_15 N18 IO_L17P_T2_A26_15
FMC1_N_LA_15 N19 IO_L17N_T2_A25_15
FMC1_P_LA_16 N20 IO_L18P_T2_A24_15
FMC1_N_LA_16 M20 IO_L18N_T2_A23_15
K13 IO_L19P_T3_A22_15
K14 IO_L19N_T3_A21_VREF_15
FMC1_P_LA_12 M13 IO_L20P_T3_A20_15
FMC1_N_LA_12 L13 IO_L20N_T3_A19_15
K17 IO_L21P_T3_DQS_15
J17 IO_L21N_T3_DQS_A18_15
L14 IO_L22P_T3_A17_15
L15 IO_L22N_T3_A16_15
L16 IO_L23P_T3_FOE_B_15
K16 IO_L23N_T3_FWE_B_15
M15 IO_L24P_T3_RS1_15
M16 IO_L24N_T3_RS0_15
M17 IO_25_15
IO_0_16 F15 FPGA_MOSI
IO_L1P_T0_16 F13 FPGA_MISO
IO_L1N_T0_16 F14 FPGA_SSEL
IO_L2P_T0_16 F16 FPGA_SCK
IO_L2N_T0_16 E17 FPGA_INT
IO_L3P_T0_DQS_16 C14 Self_FPGA_TMS
IO_L3N_T0_DQS_16 C15 Self_FPGA_TDO
IO_L4P_T0_16 E13 Self_FPGA_TDI
IO_L4N_T0_16 E14 Self_FPGA_TCK
IO_L5P_T0_16 E16 TMDS2_P
IO_L5N_T0_16 D16 TMDS2_N
IO_L6P_T0_16 D14 TMDS1_P
IO_L6N_T0_VREF_16 D15 TMDS1_N
IO_L7P_T1_16 B15 TMDS0_P
IO_L7N_T1_16 B16 TMDS0_N
IO_L8P_T1_16 C13
IO_L8N_T1_16 B13 I2C_FPGA_SCL
IO_L9P_T1_DQS_16 A15 I2C_FPGA_SDA
IO_L9N_T1_DQS_16 A16 WR_DAC2_SYNC
IO_L10P_T1_16 A13 WR_DAC_SCLK
IO_L10N_T1_16 A14 WR_DAC_DIN
IO_L11P_T1_SRCC_16 B17 WR_DAC1_SYNC
IO_L11N_T1_SRCC_16 B18 Pmod1_0
IO_L12P_T1_MRCC_16 D17 CLK20_VCXO
IO_L12N_T1_MRCC_16 C17
IO_L13P_T2_MRCC_16 C18 TMDS_CLK_P
IO_L13N_T2_MRCC_16 C19 TMDS_CLK_N
IO_L14P_T2_SRCC_16 E19 Pmod1_4
IO_L14N_T2_SRCC_16 D19 Pmod1_5
IO_L15P_T2_DQS_16 F18 Pmod1_6
IO_L15N_T2_DQS_16 E18 Pmod1_7
IO_L16P_T2_16 B20 Pmod2_0
IO_L16N_T2_16 A20 Pmod2_1
IO_L17P_T2_16 A18 Pmod2_2
IO_L17N_T2_16 A19 Pmod2_3
IO_L18P_T2_16 F19 Pmod2_4
IO_L18N_T2_16 F20 Pmod2_5
IO_L19P_T3_16 D20 Pmod2_6
IO_L19N_T3_VREF_16 C20 Pmod2_7
IO_L20P_T3_16 C22 FPGA_XR_GPIO_0
IO_L20N_T3_16 B22 I2C_FPGA_SW_RST
IO_L21P_T3_DQS_16 B21 Pmod1_1
IO_L21N_T3_DQS_16 A21 VCXO_EN
IO_L22P_T3_16 E22 EXP_INT
IO_L22N_T3_16 D22 Pmod1_2
IO_L23P_T3_16 E21 Pmod1_3
IO_L23N_T3_16 D21
IO_L24P_T3_16 G21
IO_L24N_T3_16 G22
IO_25_16 F21
U30B
XC7A200T-FBG484
Self_FPGA_TMS Self_FPGA_TMS
Self_FPGA_TDO Self_FPGA_TDO
Self_FPGA_TDI Self_FPGA_TDI
Self_FPGA_TCK Self_FPGA_TCK
I2C_FPGA_SW_RST I2C_FPGA_SW_RST
FPGA_INT FPGA_INT
FPGA_MOSI FPGA_MOSI
FPGA_MISO FPGA_MISO
FPGA_SSEL FPGA_SSEL
FPGA_SCK FPGA_SCK
EXP_INT EXP_INT
I2C_FPGA_SCL I2C_FPGA_SCL
I2C_FPGA_SDA I2C_FPGA_SDA
WR_DAC2_SYNC WR_DAC2_SYNC
WR_DAC_SCLK WR_DAC_SCLK
WR_DAC_DIN WR_DAC_DIN
WR_DAC1_SYNC WR_DAC1_SYNC
VCXO_EN VCXO_EN
CLK20_VCXO CLK20_VCXO
Pmod2_[0..7] Pmod2_[0..7]
Pmod1_[0..7] Pmod1_[0..7]
Pmod2_0
Pmod2_1
Pmod2_2
Pmod2_3
Pmod2_4
Pmod2_5
Pmod2_6
Pmod2_7
Pmod1_0
Pmod1_1
Pmod1_2
Pmod1_3
Pmod1_4
Pmod1_5
Pmod1_6
Pmod1_7
FPGA_XR_GPIO_0 FPGA_XR_GPIO_0
+3V3
49R9 R217
49R9 R218
49R9 R219
49R9 R220
49R9 R221
49R9 R222
49R9 R225
49R9 R226
D10
HDMIULC6-4SC6
D11
HDMIULC6-4SC6
GND
GND
1 2 3 4 5 6
TMDS2_P
TMDS2_N
TMDS1_P
TMDS1_N
TMDS0_P
TMDS0_N
TMDS_CLK_P
TMDS_CLK_N
1 2 3 4 5 6 7 8 9 10 11 12 13 14 15 16 17 18 19
SHIELD
J15
+3V3
Q17
BSS138
I2C_SCL_HDMI I2C_SCL_HDMI
HDMI_5V
R223
2k2
+3V3
Q18
BSS138
I2C_SDA_HDMI I2C_SDA_HDMI
HDMI_5V
R224
2k2
HDMI_5V
C37
100nF
R227
2k2
HDMI_HPD
GND
+12V
U12
MC78L05ACDR2G
C103
4.7uF
8 VIN
4 NC
2 GND
3 GND
VOUT 1
NC 5
GND 7
GND 6
HDMI_5V
C104
4.7uF
GND
GND
GND
GND

Michał Gąska / WUT
Sheet: /FPGA/FPGA_15_16/
File: FPGA_15_16.sch

Title: Simple AFC

Size: A3 Date: 2019-01-16 **Rev: 9**
KiCad E.D.A. kicad (6.0.0-rc1-dev-577-ge0316af69) Id: 23/25

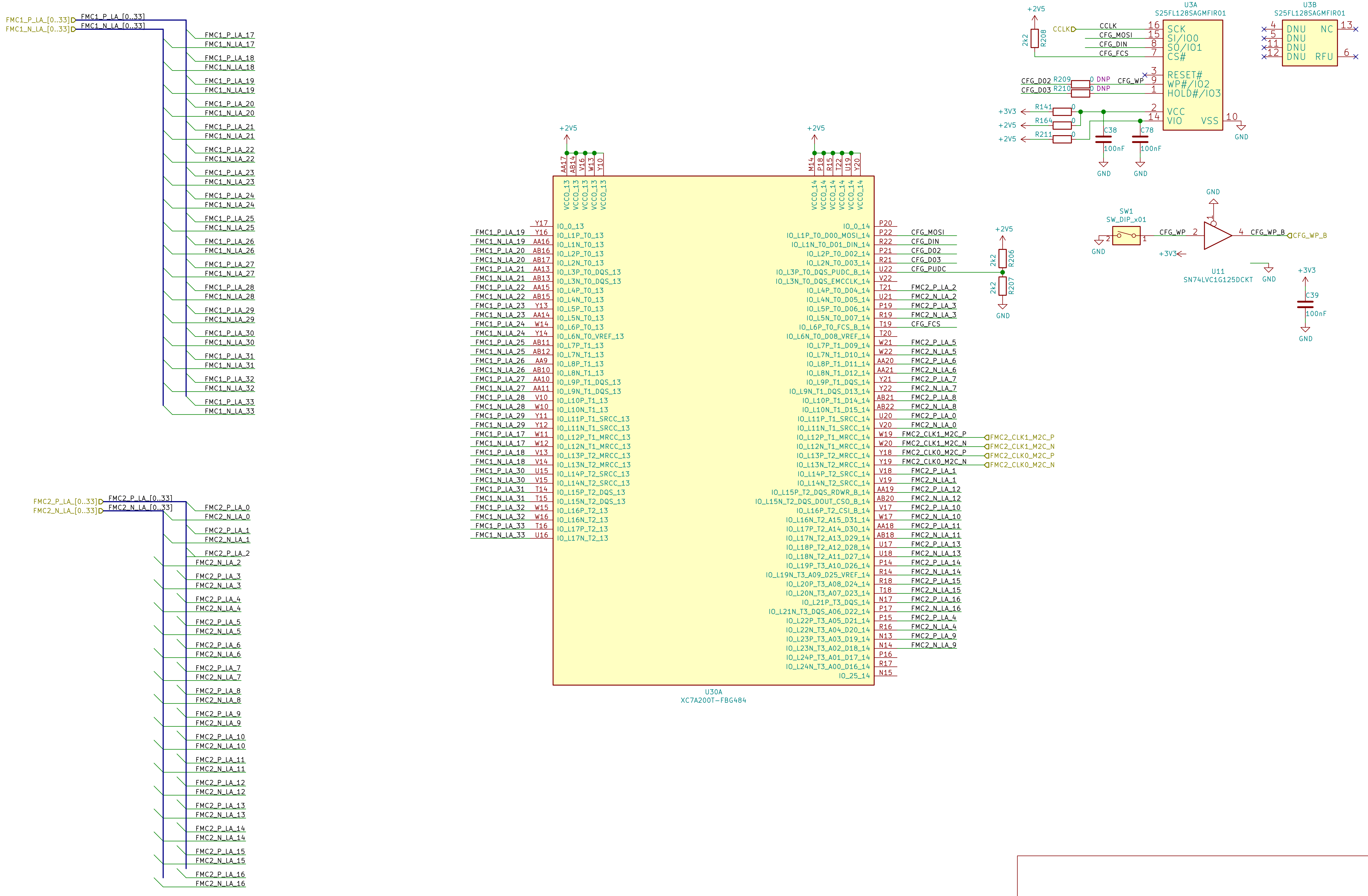
FMC1_P_LA_[0..33]
FMC1_N_LA_[0..33]
FMC1_P_LA_17
FMC1_N_LA_17
FMC1_P_LA_18
FMC1_N_LA_18
FMC1_P_LA_19
FMC1_N_LA_19
FMC1_P_LA_20
FMC1_N_LA_20
FMC1_P_LA_21
FMC1_N_LA_21
FMC1_P_LA_22
FMC1_N_LA_22
FMC1_P_LA_23
FMC1_N_LA_23
FMC1_P_LA_24
FMC1_N_LA_24
FMC1_P_LA_25
FMC1_N_LA_25
FMC1_P_LA_26
FMC1_N_LA_26
FMC1_P_LA_27
FMC1_N_LA_27
FMC1_P_LA_28
FMC1_N_LA_28
FMC1_P_LA_29
FMC1_N_LA_29
FMC1_P_LA_30
FMC1_N_LA_30
FMC1_P_LA_31
FMC1_N_LA_31
FMC1_P_LA_32
FMC1_N_LA_32
FMC1_P_LA_33
FMC1_N_LA_33
FMC2_P_LA_[0..33]
FMC2_N_LA_[0..33]
FMC2_P_LA_0
FMC2_N_LA_0
FMC2_P_LA_1
FMC2_N_LA_1
FMC2_P_LA_2
FMC2_N_LA_2
FMC2_P_LA_3
FMC2_N_LA_3
FMC2_P_LA_4
FMC2_N_LA_4
FMC2_P_LA_5
FMC2_N_LA_5
FMC2_P_LA_6
FMC2_N_LA_6
FMC2_P_LA_7
FMC2_N_LA_7
FMC2_P_LA_8
FMC2_N_LA_8
FMC2_P_LA_9
FMC2_N_LA_9
FMC2_P_LA_10
FMC2_N_LA_10
FMC2_P_LA_11
FMC2_N_LA_11
FMC2_P_LA_12
FMC2_N_LA_12
FMC2_P_LA_13
FMC2_N_LA_13
FMC2_P_LA_14
FMC2_N_LA_14
FMC2_P_LA_15
FMC2_N_LA_15
FMC2_P_LA_16
FMC2_N_LA_16
+2V5
AA17 AB14 V16 W13 Y10
VCCO_13 VCCO_13 VCCO_13 VCCO_13 VCCO_13
Y17 IO_0_13
FMC1_P_LA_19 Y16 IO_L1P_T0_13
FMC1_N_LA_19 AA16 IO_L1N_T0_13
FMC1_P_LA_20 AB16 IO_L2P_T0_13
FMC1_N_LA_20 AB17 IO_L2N_T0_13
FMC1_P_LA_21 AA13 IO_L3P_T0_DQS_13
FMC1_N_LA_21 AB13 IO_L3N_T0_DQS_13
FMC1_P_LA_22 AA15 IO_L4P_T0_13
FMC1_N_LA_22 AB15 IO_L4N_T0_13
FMC1_P_LA_23 Y13 IO_L5P_T0_13
FMC1_N_LA_23 AA14 IO_L5N_T0_13
FMC1_P_LA_24 W14 IO_L6P_T0_13
FMC1_N_LA_24 Y14 IO_L6N_T0_VREF_13
FMC1_P_LA_25 AB11 IO_L7P_T1_13
FMC1_N_LA_25 AB12 IO_L7N_T1_13
FMC1_P_LA_26 AA9 IO_L8P_T1_13
FMC1_N_LA_26 AB10 IO_L8N_T1_13
FMC1_P_LA_27 AA10 IO_L9P_T1_DQS_13
FMC1_N_LA_27 AA11 IO_L9N_T1_DQS_13
FMC1_P_LA_28 V10 IO_L10P_T1_13
FMC1_N_LA_28 W10 IO_L10N_T1_13
FMC1_P_LA_29 Y11 IO_L11P_T1_SRCC_13
FMC1_N_LA_29 Y12 IO_L11N_T1_SRCC_13
FMC1_P_LA_17 W11 IO_L12P_T1_MRCC_13
FMC1_N_LA_17 W12 IO_L12N_T1_MRCC_13
FMC1_P_LA_18 V13 IO_L13P_T2_MRCC_13
FMC1_N_LA_18 V14 IO_L13N_T2_MRCC_13
FMC1_P_LA_30 U15 IO_L14P_T2_SRCC_13
FMC1_N_LA_30 V15 IO_L14N_T2_SRCC_13
FMC1_P_LA_31 T14 IO_L15P_T2_DQS_13
FMC1_N_LA_31 T15 IO_L15N_T2_DQS_13
FMC1_P_LA_32 W15 IO_L16P_T2_13
FMC1_N_LA_32 W16 IO_L16N_T2_13
FMC1_P_LA_33 T16 IO_L17P_T2_13
FMC1_N_LA_33 U16 IO_L17N_T2_13
+2V5
M14 P18 R15 T22 U19 Y20
VCCO_14 VCCO_14 VCCO_14 VCCO_14 VCCO_14 VCCO_14
IO_0_14 P20
IO_L1P_T0_D00_MOSI_14 P22 CFG_MOSI
IO_L1N_T0_D01_DIN_14 R22 CFG_DIN
IO_L2P_T0_D02_14 P21 CFG_D02
IO_L2N_T0_D03_14 R21 CFG_D03
IO_L3P_T0_DQS_PUDC_B_14 U22 CFG_PUDC
IO_L3N_T0_DQS_EMCCLK_14 V22
IO_L4P_T0_D04_14 T21 FMC2_P_LA_2
IO_L4N_T0_D05_14 U21 FMC2_N_LA_2
IO_L5P_T0_D06_14 P19 FMC2_P_LA_3
IO_L5N_T0_D07_14 R19 FMC2_N_LA_3
IO_L6P_T0_FCS_B_14 T19 CFG_FCS
IO_L6N_T0_D08_VREF_14 T20
IO_L7P_T1_D09_14 W21 FMC2_P_LA_5
IO_L7N_T1_D10_14 W22 FMC2_N_LA_5
IO_L8P_T1_D11_14 AA20 FMC2_P_LA_6
IO_L8N_T1_D12_14 AA21 FMC2_N_LA_6
IO_L9P_T1_DQS_14 Y21 FMC2_P_LA_7
IO_L9N_T1_DQS_D13_14 Y22 FMC2_N_LA_7
IO_L10P_T1_D14_14 AB21 FMC2_P_LA_8
IO_L10N_T1_D15_14 AB22 FMC2_N_LA_8
IO_L11P_T1_SRCC_14 U20 FMC2_P_LA_0
IO_L11N_T1_SRCC_14 V20 FMC2_N_LA_0
IO_L12P_T1_MRCC_14 W19 FMC2_CLK1_M2C_P
IO_L12N_T1_MRCC_14 W20 FMC2_CLK1_M2C_N
IO_L13P_T2_MRCC_14 Y18 FMC2_CLK0_M2C_P
IO_L13N_T2_MRCC_14 Y19 FMC2_CLK0_M2C_N
IO_L14P_T2_SRCC_14 V18 FMC2_P_LA_1
IO_L14N_T2_SRCC_14 V19 FMC2_N_LA_1
IO_L15P_T2_DQS_RDWR_B_14 AA19 FMC2_P_LA_12
IO_L15N_T2_DQS_DOUT_CSO_B_14 AB20 FMC2_N_LA_12
IO_L16P_T2_CSI_B_14 V17 FMC2_P_LA_10
IO_L16N_T2_A15_D31_14 W17 FMC2_N_LA_10
IO_L17P_T2_A14_D30_14 AA18 FMC2_P_LA_11
IO_L17N_T2_A13_D29_14 AB18 FMC2_N_LA_11
IO_L18P_T2_A12_D28_14 U17 FMC2_P_LA_13
IO_L18N_T2_A11_D27_14 U18 FMC2_N_LA_13
IO_L19P_T3_A10_D26_14 P14 FMC2_P_LA_14
IO_L19N_T3_A09_D25_VREF_14 R14 FMC2_N_LA_14
IO_L20P_T3_A08_D24_14 R18 FMC2_P_LA_15
IO_L20N_T3_A07_D23_14 T18 FMC2_N_LA_15
IO_L21P_T3_DQS_14 N17 FMC2_P_LA_16
IO_L21N_T3_DQS_A06_D22_14 P17 FMC2_N_LA_16
IO_L22P_T3_A05_D21_14 P15 FMC2_P_LA_4
IO_L22N_T3_A04_D20_14 R16 FMC2_N_LA_4
IO_L23P_T3_A03_D19_14 N13 FMC2_P_LA_9
IO_L23N_T3_A02_D18_14 N14 FMC2_N_LA_9
IO_L24P_T3_A01_D17_14 P16
IO_L24N_T3_A00_D16_14 R17
IO_25_14 N15
FMC2_CLK1_M2C_P
FMC2_CLK1_M2C_N
FMC2_CLK0_M2C_P
FMC2_CLK0_M2C_N
U30A
XC7A200T-FBG484
+2V5
2k2 R206
2k2 R207
GND
U3A
S25FL128SAGMFIR01
+2V5
2k2 R208
CCLK
CCLK 16 SCK
CFG_MOSI 15 SI/IO0
CFG_DIN 8 SO/IO1
CFG_FCS 7 CS#
3 RESET#
CFG_D02 R209 0 DNP CFG_WP 9 WP#/IO2
CFG_D03 R210 0 DNP 1 HOLD#/IO3
+3V3 R141 0 2 VCC
+2V5 R164 0 14 VIO
+2V5 R211 0
VSS 10
GND
C38 100nF GND
C78 100nF GND
U3B
S25FL128SAGMFIR01
4 DNU
5 DNU
11 DNU
12 DNU
NC 13
RFU 6
SW1
SW_DIP_x01
GND
2 1
CFG_WP 2
GND
1
4 CFG_WP_B
CFG_WP_B
+3V3
U11
SN74LVC1G125DCKT
GND
+3V3
C39
100nF
GND
1 2 3 4 5 6 7 8
A B C D E F

Michał Gąska / WUT

Sheet: /FPGA/FPGA_13_14/
File: FPGA_13_14.sch

Title: Simple AFC

Size: A3
Date: 2019-01-16
Rev: 9
KiCad E.D.A. kicad (6.0.0-rc1-dev-577-ge0316af69)
Id: 24/25

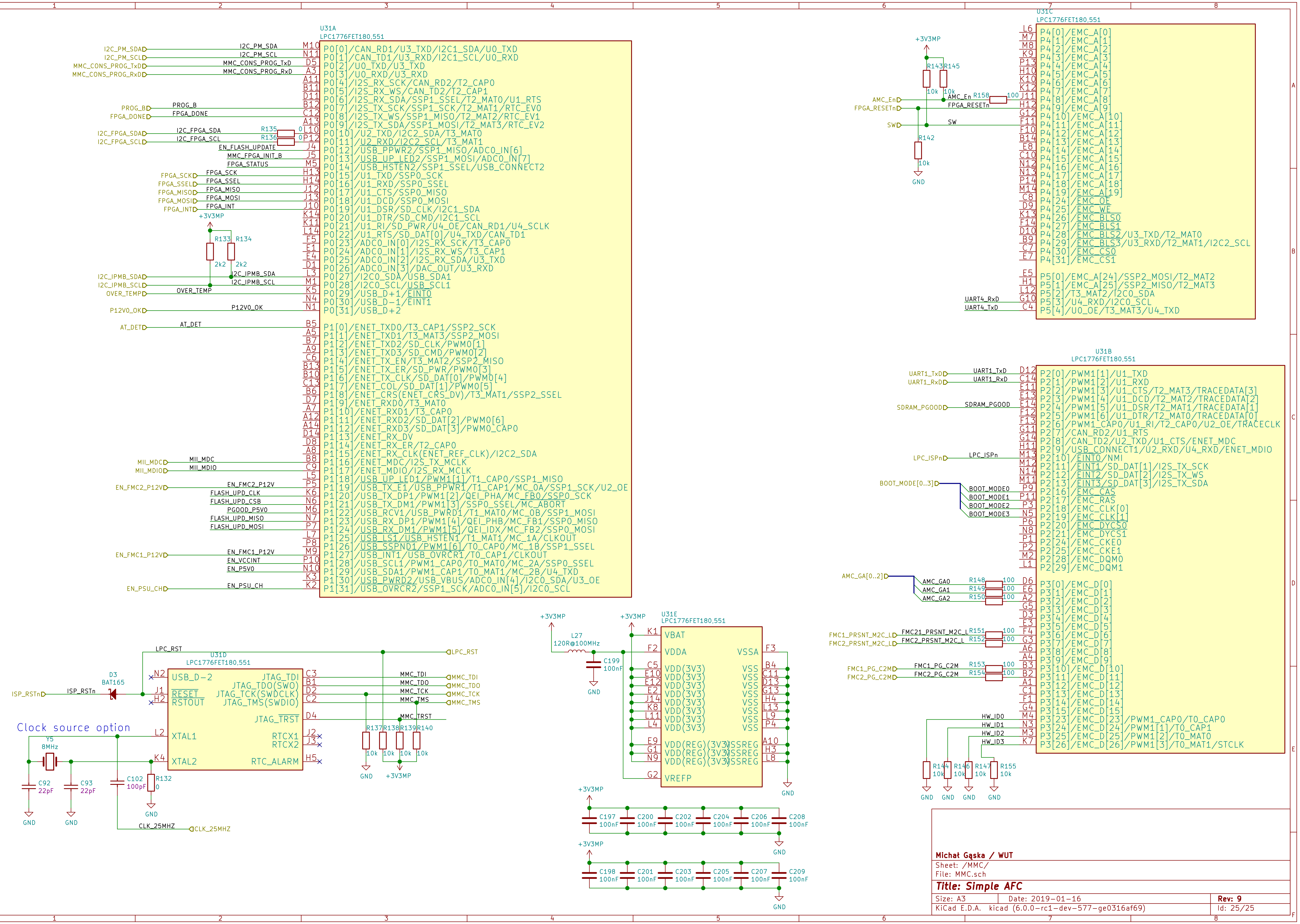
U31A
LPC1776FET180,551
I2C_PM_SDA
I2C_PM_SCL
MMC_CONS_PROG_TxD
MMC_CONS_PROG_RxD
PROG_B
FPGA_DONE
I2C_FPGA_SDA
I2C_FPGA_SCL
R135
R136
0
EN_FLASH_UPDATE
MMC_FPGA_INIT_B
FPGA_STATUS
FPGA_SCK
FPGA_SSEL
FPGA_MISO
FPGA_MOSI
FPGA_INT
+3V3MP
R133
R134
2k2
I2C_IPMB_SDA
I2C_IPMB_SCL
OVER_TEMP
P12V0_OK
AT_DET
MII_MDC
MII_MDIO
EN_FMC2_P12V
FLASH_UPD_CLK
FLASH_UPD_CSB
PGOOD_P5V0
FLASH_UPD_MISO
FLASH_UPD_MOSI
EN_FMC1_P12V
EN_VCCINT
EN_P5V0
EN_PSU_CH
P0[0]/CAN_RD1/U3_TXD/I2C1_SDA/U0_TXD
P0[1]/CAN_TD1/U3_RXD/I2C1_SCL/U0_RXD
P0[2]/U0_TXD/U3_TXD
P0[3]/U0_RXD/U3_RXD
P0[4]/I2S_RX_SCK/CAN_RD2/T2_CAP0
P0[5]/I2S_RX_WS/CAN_TD2/T2_CAP1
P0[6]/I2S_RX_SDA/SSP1_SSEL/T2_MAT0/U1_RTS
P0[7]/I2S_TX_SCK/SSP1_SCK/T2_MAT1/RTC_EV0
P0[8]/I2S_TX_WS/SSP1_MISO/T2_MAT2/RTC_EV1
P0[9]/I2S_TX_SDA/SSP1_MOSI/T2_MAT3/RTC_EV2
P0[10]/U2_TXD/I2C2_SDA/T3_MAT0
P0[11]/U2_RXD/I2C2_SCL/T3_MAT1
P0[12]/USB_PPWR2/SSP1_MISO/ADC0_IN[6]
P0[13]/USB_UP_LED2/SSP1_MOSI/ADC0_IN[7]
P0[14]/USB_HSTEN2/SSP1_SSEL/USB_CONNECT2
P0[15]/U1_TXD/SSP0_SCK
P0[16]/U1_RXD/SSP0_SSEL
P0[17]/U1_CTS/SSP0_MISO
P0[18]/U1_DCD/SSP0_MOSI
P0[19]/U1_DSR/SD_CLK/I2C1_SDA
P0[20]/U1_DTR/SD_CMD/I2C1_SCL
P0[21]/U1_RI/SD_PWR/U4_OE/CAN_RD1/U4_SCLK
P0[22]/U1_RTS/SD_DAT[0]/U4_TXD/CAN_TD1
P0[23]/ADC0_IN[0]/I2S_RX_SCK/T3_CAP0
P0[24]/ADC0_IN[1]/I2S_RX_WS/T3_CAP1
P0[25]/ADC0_IN[2]/I2S_RX_SDA/U3_TXD
P0[26]/ADC0_IN[3]/DAC_OUT/U3_RXD
P0[27]/I2C0_SDA/USB_SDA1
P0[28]/I2C0_SCL/USB_SCL1
P0[29]/USB_D+1/EINT0
P0[30]/USB_D-1/EINT1
P0[31]/USB_D+2
P1[0]/ENET_TXD0/T3_CAP1/SSP2_SCK
P1[1]/ENET_TXD1/T3_MAT3/SSP2_MOSI
P1[2]/ENET_TXD2/SD_CLK/PWM0[1]
P1[3]/ENET_TXD3/SD_CMD/PWM0[2]
P1[4]/ENET_TX_EN/T3_MAT2/SSP2_MISO
P1[5]/ENET_TX_ER/SD_PWR/PWM0[3]
P1[6]/ENET_TX_CLK/SD_DAT[0]/PWM0[4]
P1[7]/ENET_COL/SD_DAT[1]/PWM0[5]
P1[8]/ENET_CRS(ENET_CRS_DV)/T3_MAT1/SSP2_SSEL
P1[9]/ENET_RXD0/T3_MAT0
P1[10]/ENET_RXD1/T3_CAP0
P1[11]/ENET_RXD2/SD_DAT[2]/PWM0[6]
P1[12]/ENET_RXD3/SD_DAT[3]/PWM0_CAP0
P1[13]/ENET_RX_DV
P1[14]/ENET_RX_ER/T2_CAP0
P1[15]/ENET_RX_CLK(ENET_REF_CLK)/I2C2_SDA
P1[16]/ENET_MDC/I2S_TX_MCLK
P1[17]/ENET_MDIO/I2S_RX_MCLK
P1[18]/USB_UP_LED1/PWM1[1]/T1_CAP0/SSP1_MISO
P1[19]/USB_TX_E1/USB_PPWR1/T1_CAP1/MC_0A/SSP1_SCK/U2_OE
P1[20]/USB_TX_DP1/PWM1[2]/QEI_PHA/MC_FB0/SSP0_SCK
P1[21]/USB_TX_DM1/PWM1[3]/SSP0_SSEL/MC_ABORT
P1[22]/USB_RCV1/USB_PWRD1/T1_MAT0/MC_0B/SSP1_MOSI
P1[23]/USB_RX_DP1/PWM1[4]/QEI_PHB/MC_FB1/SSP0_MISO
P1[24]/USB_RX_DM1/PWM1[5]/QEI_IDX/MC_FB2/SSP0_MOSI
P1[25]/USB_LS1/USB_HSTEN1/T1_MAT1/MC_1A/CLKOUT
P1[26]/USB_SSPND1/PWM1[6]/T0_CAP0/MC_1B/SSP1_SSEL
P1[27]/USB_INT1/USB_OVRCR1/T0_CAP1/CLKOUT
P1[28]/USB_SCL1/PWM1_CAP0/T0_MAT0/MC_2A/SSP0_SSEL
P1[29]/USB_SDA1/PWM1_CAP1/T0_MAT1/MC_2B/U4_TXD
P1[30]/USB_PWRD2/USB_VBUS/ADC0_IN[4]/I2C0_SDA/U3_OE
P1[31]/USB_OVRCR2/SSP1_SCK/ADC0_IN[5]/I2C0_SCL
M10
N11
D5
A3
A11
B11
D11
B12
C12
A13
L10
P12
J4
J5
M5
H13
H14
J12
J13
J10
K14
K11
L14
F5
E1
E4
D1
L3
M1
K5
N4
N1
B5
A5
B7
A9
C6
B13
B10
C13
B6
D7
A7
A12
A14
D14
D8
A8
B8
C9
L5
P5
K6
N6
M6
N7
P7
L7
P8
M9
P10
N10
K3
K2
U31C
LPC1776FET180,551
+3V3MP
R143
R145
10k
AMC_En
FPGA_RESETn
R158
100
SW
R142
10k
GND
P4[0]/EMC_A[0]
P4[1]/EMC_A[1]
P4[2]/EMC_A[2]
P4[3]/EMC_A[3]
P4[4]/EMC_A[4]
P4[5]/EMC_A[5]
P4[6]/EMC_A[6]
P4[7]/EMC_A[7]
P4[8]/EMC_A[8]
P4[9]/EMC_A[9]
P4[10]/EMC_A[10]
P4[11]/EMC_A[11]
P4[12]/EMC_A[12]
P4[13]/EMC_A[13]
P4[14]/EMC_A[14]
P4[15]/EMC_A[15]
P4[16]/EMC_A[16]
P4[17]/EMC_A[17]
P4[18]/EMC_A[18]
P4[19]/EMC_A[19]
P4[24]/EMC_OE
P4[25]/EMC_WE
P4[26]/EMC_BLS0
P4[27]/EMC_BLS1
P4[28]/EMC_BLS2/U3_TXD/T2_MAT0
P4[29]/EMC_BLS3/U3_RXD/T2_MAT1/I2C2_SCL
P4[30]/EMC_CS0
P4[31]/EMC_CS1
P5[0]/EMC_A[24]/SSP2_MOSI/T2_MAT2
P5[1]/EMC_A[25]/SSP2_MISO/T2_MAT3
P5[2]/T3_MAT2/I2C0_SDA
P5[3]/U4_RXD/I2C0_SCL
P5[4]/U0_OE/T3_MAT3/U4_TXD
UART4_RxD
UART4_TxD
L6
M7
M8
K9
P13
H10
K10
K12
J11
H12
G12
F11
F10
B14
E8
C10
N12
N13
P14
M14
C8
D9
K13
F14
D10
B9
C7
E7
E5
H1
L12
G10
C4
U31B
LPC1776FET180,551
UART1_TxD
UART1_RxD
SDRAM_PGOOD
LPC_ISPn
BOOT_MODE[0..3]
BOOT_MODE0
BOOT_MODE1
BOOT_MODE2
BOOT_MODE3
P2[0]/PWM1[1]/U1_TXD
P2[1]/PWM1[2]/U1_RXD
P2[2]/PWM1[3]/U1_CTS/T2_MAT3/TRACEDATA[3]
P2[3]/PWM1[4]/U1_DCD/T2_MAT2/TRACEDATA[2]
P2[4]/PWM1[5]/U1_DSR/T2_MAT1/TRACEDATA[1]
P2[5]/PWM1[6]/U1_DTR/T2_MAT0/TRACEDATA[0]
P2[6]/PWM1_CAP0/U1_RI/T2_CAP0/U2_OE/TRACECLK
P2[7]/CAN_RD2/U1_RTS
P2[8]/CAN_TD2/U2_TXD/U1_CTS/ENET_MDC
P2[9]/USB_CONNECT1/U2_RXD/U4_RXD/ENET_MDIO
P2[10]/EINT0/NMI
P2[11]/EINT1/SD_DAT[1]/I2S_TX_SCK
P2[12]/EINT2/SD_DAT[2]/I2S_TX_WS
P2[13]/EINT3/SD_DAT[3]/I2S_TX_SDA
P2[16]/EMC_CAS
P2[17]/EMC_RAS
P2[18]/EMC_CLK[0]
P2[19]/EMC_CLK[1]
P2[20]/EMC_DYCS0
P2[21]/EMC_DYCS1
P2[24]/EMC_CKE0
P2[25]/EMC_CKE1
P2[28]/EMC_DQM0
P2[29]/EMC_DQM1
D12
C14
E11
E13
E14
F12
F13
G11
G14
H11
M13
M12
N14
M11
P9
P11
P3
N5
P6
N8
P1
P2
M2
L1
AMC_GA[0..2]
AMC_GA0
AMC_GA1
AMC_GA2
R148
R149
R150
FMC1_PRSNT_M2C_L
FMC2_PRSNT_M2C_L
FMC21_PRSNT_M2C_L
R151
R152
FMC1_PG_C2M
FMC2_PG_C2M
R153
R154
HW_ID0
HW_ID1
HW_ID2
HW_ID3
P3[0]/EMC_D[0]
P3[1]/EMC_D[1]
P3[2]/EMC_D[2]
P3[3]/EMC_D[3]
P3[4]/EMC_D[4]
P3[5]/EMC_D[5]
P3[6]/EMC_D[6]
P3[7]/EMC_D[7]
P3[8]/EMC_D[8]
P3[9]/EMC_D[9]
P3[10]/EMC_D[10]
P3[11]/EMC_D[11]
P3[12]/EMC_D[12]
P3[13]/EMC_D[13]
P3[14]/EMC_D[14]
P3[15]/EMC_D[15]
P3[23]/EMC_D[23]/PWM1_CAP0/T0_CAP0
P3[24]/EMC_D[24]/PWM1[1]/T0_CAP1
P3[25]/EMC_D[25]/PWM1[2]/T0_MAT0
P3[26]/EMC_D[26]/PWM1[3]/T0_MAT1/STCLK
D6
E6
A2
G5
D3
E3
F4
G3
A6
A4
B3
B2
A1
C1
F1
G4
M4
N3
M3
K7
R144
R146
R147
R155
10k
GND
LPC_RST
U31D
LPC1776FET180,551
D3
BAT165
ISP_RSTn
N2
J1
H2
USB_D-2
RESET
RSTOUT
JTAG_TDI
JTAG_TDO(SWO)
JTAG_TCK(SWDCLK)
JTAG_TMS(SWDIO)
JTAG_TRST
C3
B1
D2
C2
D4
MMC_TDI
MMC_TDO
MMC_TCK
MMC_TMS
MMC_TRST
R137
R138
R139
R140
10k
GND
+3V3MP
L2
K4
XTAL1
XTAL2
RTCX1
RTCX2
RTC_ALARM
J2
J3
H5
Y5
8MHz
C92
22pF
C93
22pF
C102
100pF
R132
0
GND
CLK_25MHZ
+3V3MP
L27
120R@100MHz
C199
100nF
GND
U31E
LPC1776FET180,551
K1
F2
C5
E10
E12
E2
J14
K8
L11
L4
E9
G1
N9
G2
VBAT
VDDA
VDD(3V3)
VDD(REG)(3V3)
VREFP
VSSA
VSS
VSSREG
F3
B4
C11
D13
G13
H4
L13
L9
P4
A10
H3
L8
GND
+3V3MP
C197
C200
C202
C204
C206
C208
C198
C201
C203
C205
C207
C209
100nF
GND
1
2
3
4
5
6
7
8
A
B
C
D
E
F

Clock source option

Michał Gąska / WUT
Sheet: /MMC/
File: MMC.sch

Title: Simple AFC

Size: A3 Date: 2019-01-16 **Rev: 9**
KiCad E.D.A. kicad (6.0.0-rc1-dev-577-ge0316af69) Id: 25/25