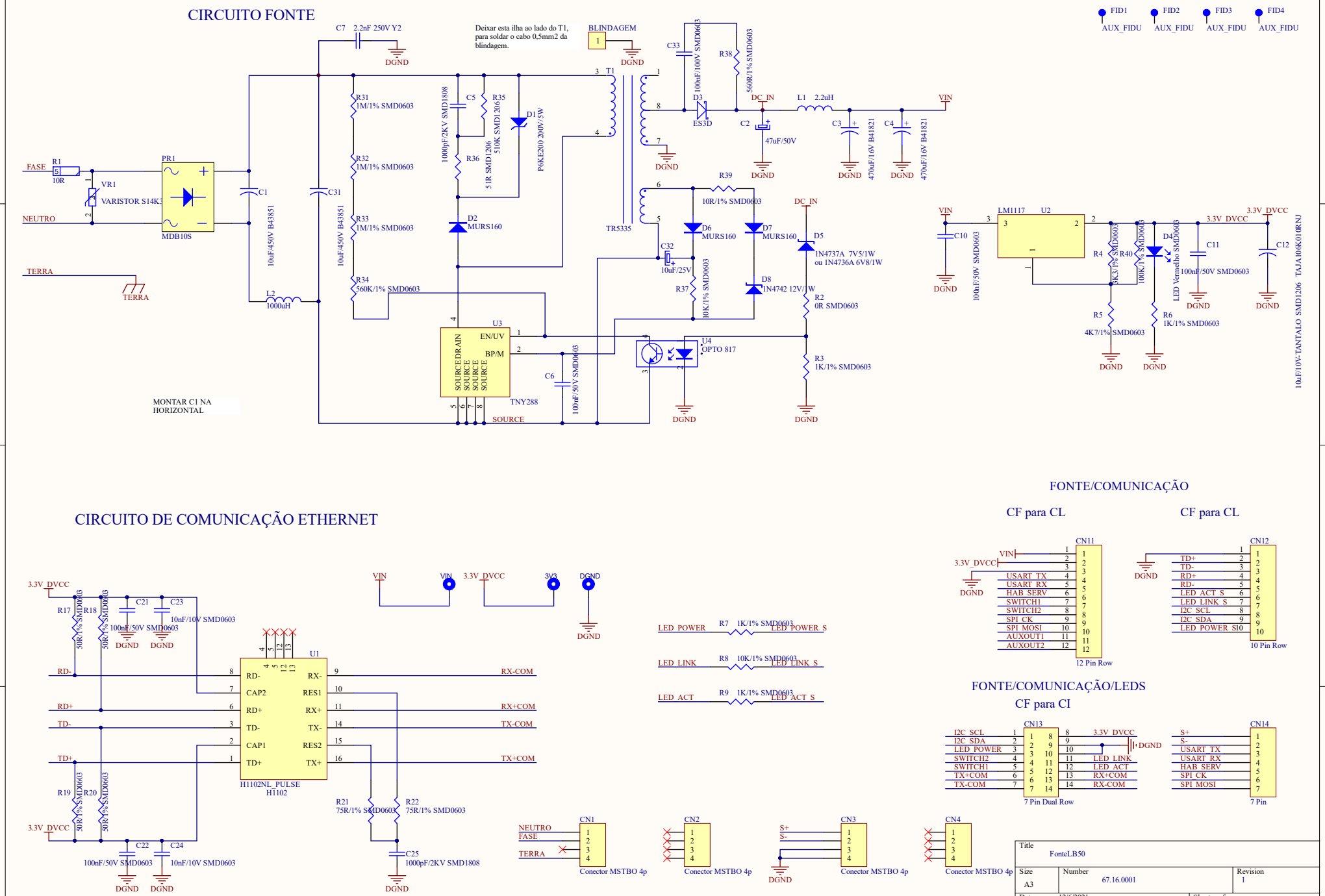
CIRCUITO FONTE
FID1 AUX_FIDU
FID2 AUX_FIDU
FID3 AUX_FIDU
FID4 AUX_FIDU
C7 2.2nF 250V Y2
DGND
Deixar esta ilha ao lado do T1, para soldar o cabo 0,5mm2 da blindagem.
BLINDAGEM
FASE
R1 10R
VR1 VARISTOR S14K3
NEUTRO
PR1
MDB10S
TERRA
C1 10uF/450V B43851
C31 10uF/450V B43851
L2 1000uH
R31 1M/1% SMD0603
R32 1M/1% SMD0603
R33 1M/1% SMD0603
R34 560K/1% SMD0603
C5 1000pF/2KV SMD1808
R36 51R SMD1206
R35 510K SMD1206
D1 P6KE200 200V/5W
D2 MURS160
T1
TR5335
C33 100nF/100V SMD0603
R38 560R/1% SMD0603
D3 ES3D
C2 47uF/50V
DC_IN
L1 2.2uH
C3 470uF/16V B41821
C4 470uF/16V B41821
VIN
R39 10R/1% SMD0603
D6 MURS160
D7 MURS160
C32 10uF/25V
R37 10K/1% SMD0603
D8 1N4742 12V/1W
D5 1N4737A 7V5/1W ou 1N4736A 6V8/1W
R2 0R SMD0603
R3 1K/1% SMD0603
U3 TNY288
EN/UV
BP/M
SOURCE DRAIN
SOURCE
SOURCE
SOURCE
C6 100nF/50V SMD0603
U4 OPTO 817
MONTAR C1 NA HORIZONTAL
LM1117 U2
C10 100nF/50V SMD0603
3.3V_DVCC
R4 3K3/1% SMD0603
R40 100K/1% SMD0603
D4 LED Vermelho SMD0603
C11 100nF/50V SMD0603
C12 10uF/10V-TANTALO SMD1206 TAJA106K010RNJ
R5 4K7/1% SMD0603
R6 1K/1% SMD0603
CIRCUITO DE COMUNICAÇÃO ETHERNET
3.3V_DVCC
R17 50R/1% SMD0603
R18 50R/1% SMD0603
C21 100nF/50V SMD0603
C23 10nF/10V SMD0603
VIN
3V3
U1
H1102NL_PULSE H1102
RD-
RD+
TD-
TD+
CAP2
CAP1
RX-
RES1
RX+
TX-
RES2
TX+
RX-COM
RX+COM
TX-COM
TX+COM
R19 50R/1% SMD0603
R20 50R/1% SMD0603
C22 100nF/50V SMD0603
C24 10nF/10V SMD0603
R21 75R/1% SMD0603
R22 75R/1% SMD0603
C25 1000pF/2KV SMD1808
LED_POWER R7 1K/1% SMD0603 LED_POWER_S
LED_LINK R8 10K/1% SMD0603 LED_LINK_S
LED_ACT R9 1K/1% SMD0603 LED_ACT_S
FONTE/COMUNICAÇÃO
CF para CL
CN11
12 Pin Row
USART_TX
USART_RX
HAB_SERV
SWITCH1
SWITCH2
SPI_CK
SPI_MOSI
AUXOUT1
AUXOUT2
CF para CL
CN12
10 Pin Row
TD+
TD-
RD+
RD-
LED_ACT_S
LED_LINK_S
I2C_SCL
I2C_SDA
LED_POWER_SI0
FONTE/COMUNICAÇÃO/LEDS
CF para CI
CN13
7 Pin Dual Row
I2C_SCL
I2C_SDA
LED_POWER
SWITCH2
SWITCH1
TX+COM
TX-COM
3.3V_DVCC
LED_LINK
LED_ACT
RX+COM
RX-COM
CN14
7 Pin
S+
S-
USART_TX
USART_RX
HAB_SERV
SPI_CK
SPI_MOSI
CN1
NEUTRO
FASE
TERRA
Conector MSTBO 4p
CN2
Conector MSTBO 4p
CN3
Conector MSTBO 4p
CN4
Conector MSTBO 4p
Title FonteLB50
Size A3
Number 67.16.0001
Revision 1
Date: 12/6/2021
File: C:\Users\..\FonteLB50.SchDoc
Sheet of
Drawn By: