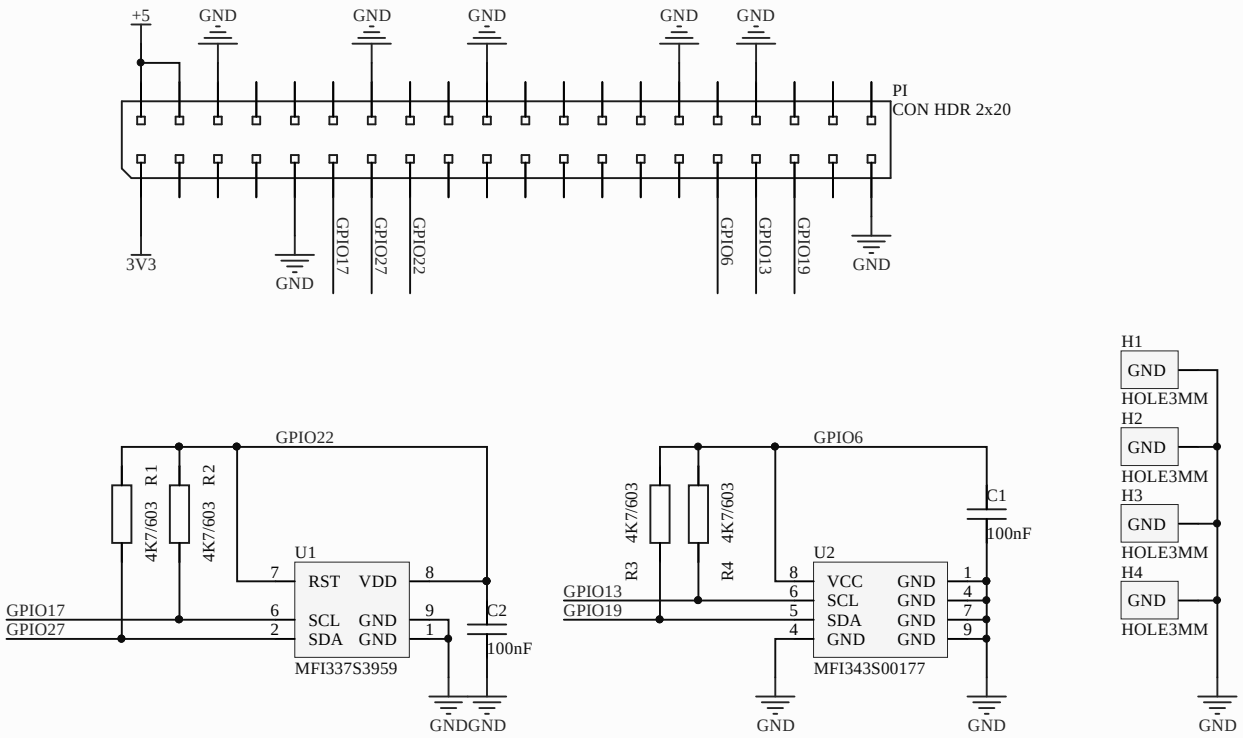
+5
GND
GND
GND
GND
GND
PI
CON HDR 2x20
3V3
GND
GPIO17
GPIO27
GPIO22
GPIO6
GPIO13
GPIO19
GND
GND
GND
GND
GND