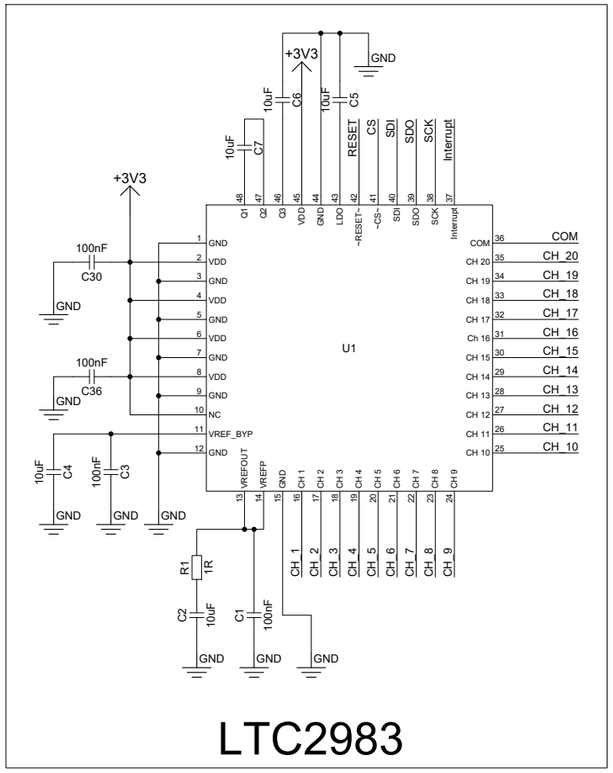

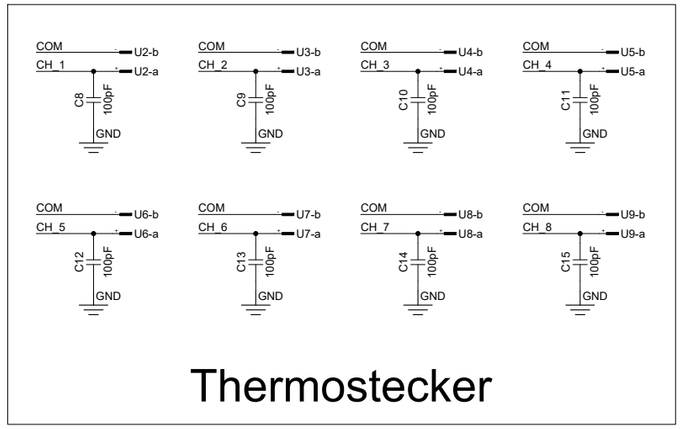

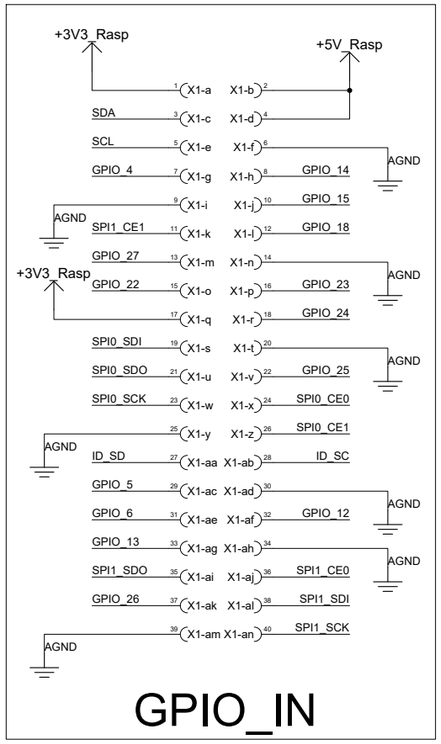

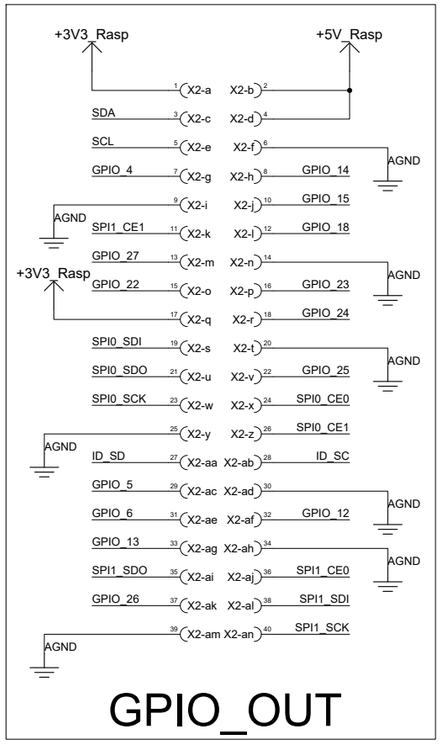

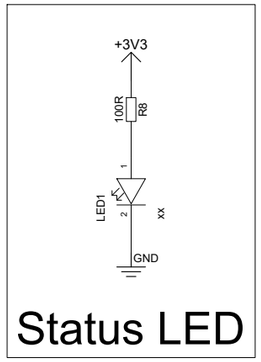

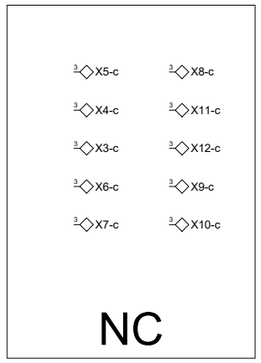

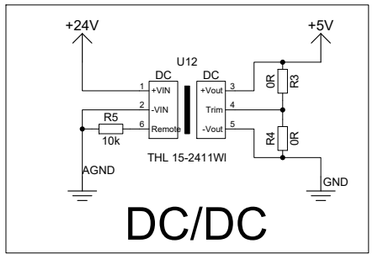

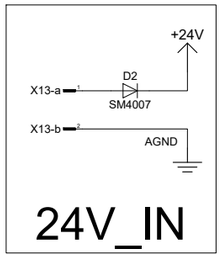

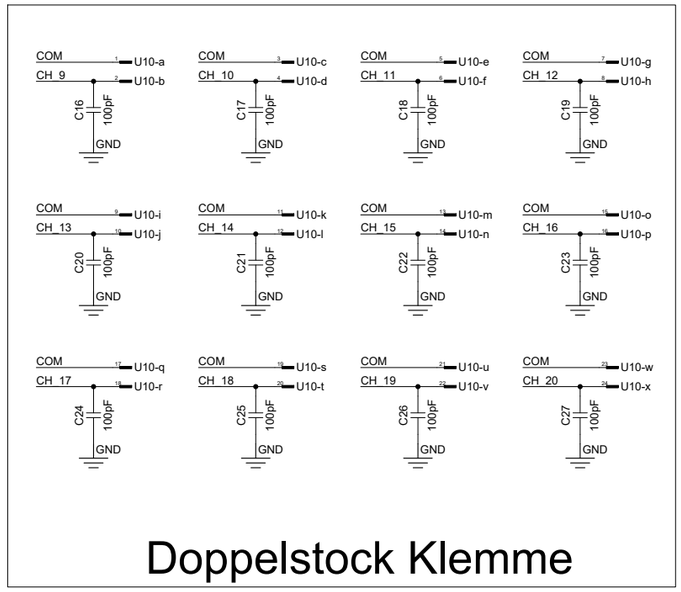

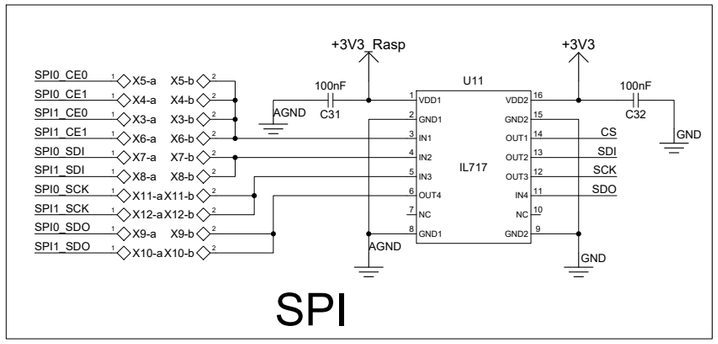

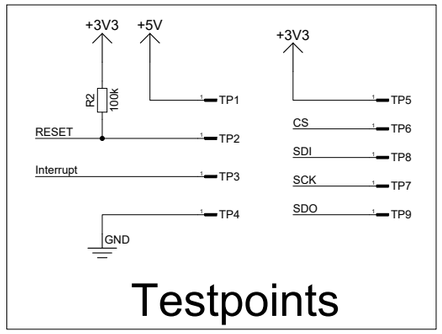

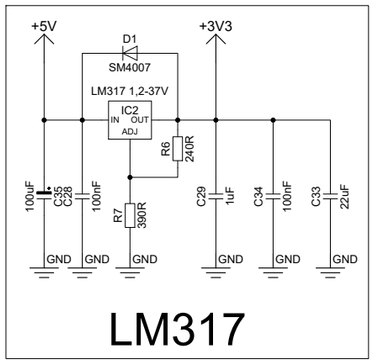

Replacement	Index	AEM	Modification description	Date	Editor	Proved	Release SEI	Release SCA
	SHB ????							

For this drawing
we reserve all
copyrights (ISO 16016)

	Date	Name
Editor	13.05.2020	Kälin Felix
Proved	XX.XX.20XX	XXX
Release SEI	XX.XX.20XX	Höhn
Release SCA	XX.XX.20XX	Radu
Project number:	XXXX	

STEINEL®

Designation
Circuit diagram
Leiterplatte Xxxxxxxxxxxxxxxx
Typ XXXX

XXXXXXXXX
Drawing number:

Page 1
Pages 1

Folder:..\Xxxxxxxxxxxxxxxxxx