DOJO CLOCK

USER MANUAL

Developed and constructed Nov-2023 to April 2026
By Chris Janssen exclusively for:
Journey Martial Arts, Wausau, WI
Thank you for your inspiration and guidance,
Master Matt Haines

https://github.com/BetaOri/dojoclock

PREMISE

I had just earned my first dan with my thesis being the philosophy of Kaizen or constant incremental improvement. I had no knowledge of the newer style microcontrollers called ESP32s. These amazing little computers were packed with powerful features but their lower 3.2volt logic made them completely foreign to me. Could I learn to use them and other brand new unknown components (light sensor, matrix keypad, programmable LED strips, I2C comms bus etc..) to build the very best clock for our dojo?
I began taking small steps, testing the break points of the project and researching what a A+ clock would behave like.

BASIC HARDWARE

Most interaction is done via the keypad buttons and the LCD display on the unit.

You will also find the "Touchless Virtual Key" VERY valuable. To use this key, simply block the light entering the white sensor as the top. Touching the device is unnecessary. Using this for pauses will GREATLY extend the keypad's life.

The larger LED display is used by the larger group but not required for engaging with the clock.

This device works BEST when it's connected to a wifi network with access to the internet!
When the clock is powered it attempts to connect to a wifi network
If successful, it will try to sync with an internet time server.
If not, it will set a default (incorrect) time.
Therefore, it's important to put the clock on your network for this to happen.
Once this is done, as long as you don't change the password or router, the clock will continue to sync externally daily and be an extremely accurate time piece.

ONE TIME SETUP

MOUNT TO WALL

1) With the keypad unit apart, level the base in position and mark the (4) holes with a pen.
2) Remove the base and pilot holes. Preferably some of them into a stud.
3) Use 4 screws to secure base to wall, being careful not to split the base, damage any internal wiring or components.
4) Put on the front faceplate ENSURING you don't pinch any wires.
5) Secure the front with 4 screws on the side corners. Do NOT over tighten or you will break the plastic.
6) The large LED display and Bell MUST be mounted with a stud as they are heavy and could cause serious injury if they were to fall on someone. Secure all wires to prevent snagging damage or choking hazards.

FIRST BOOT UP

1) Power device and let it completely boot up. (the time will be wrong, that's normal)
2) Set time preferences with MORE (F4) > SET UP (F4) > Set Clock (F2) > Set your preferred time zone (F1) , Use of Daylight Savings DST (F2), Use 12 or 24 hour time (F4).
3) If you don't have Wifi available, at this time you will need to set the date and time.

PUT DOJO CLOCK ON YOUR WIFI

1) Let unit completely boot up.
2) MORE (F4)> SETTINGS (F4) > SERVER (4) The clock now has it's own wifi network.
3) Use your device (phone, tablet or laptop) to connect to this network SSID: DojoClock, Password: Journey135
4) Open a browser window and enter the clock's IP address: 192.168.4.1
5) On the DojoClock web page> WIFI SETTINGS> Enter your wifi name and password, then press START on keypad.
6) If clock still fails to get correct time after even a restart. Retry to enter your wifi credentials until it connects.

NOTE: You will see the Preferences and Programs options here. They can be slow access on a mobile device. Highly suggest you access these from a laptop (and full keyboard) once the clock is on your wifi network!

PREFERENCES AND MORE SETTINGS (The fastest access)

You can change many aspects of the clock's behavior and appearance in the advanced preferences.
Highly suggest you have the clock on your wifi network and access these via a laptop with full keyboard.
1) MORE (F4)> SETTINGS (F4) > SERVER (4)
2) Write down the wifi network name and IP address of the clock given by your router. Example: 192.168.1.250 **Note:** this numbered address will probably change over time because most routers are set for DHCP and Dynamically issue IP addresses to your devices.
3) With a computer or laptop on the same network, open a internet browser.
4) In the internet address field of the browser, type the IP address you wrote down. Example: 192.168.1.250 You do NOT need www in front. Just the address.
5) The home page has three buttons " Programs", WiFi Settings" & "Preferences."

- Programs: You can enter your custom made timing programs 1-10.
- Wifi Settings: is the SSID and Password for YOUR wifi network.
- Preferences: There are MANY options here each one explained.

BASIC TIMING USE

COUNT UP TIMER

While is normal clock mode:
1) Press START on keypad.
2) You can pause the timer with any key press or via the touchless virtual key.
3) When finished , press STOP to return to normal clock mode. Note: The clock will automatically return to clock mode after the "Neglect Timer" time setting.

COUNT DOWN TIMER

While is normal clock mode:
1) Enter the Minutes:Seconds and press START.
2) You can still pause the time with any button press or a virtual sensor press.

COUNT DOWN SPARRING TIMER (MANUAL ENTRY)

A sparring session is made of Rounds. Each Round can contain 1) Fight 2) Rest.

- Fight time can be modified with random bonus time both shown and blind.
- Rest time is processed straight.

Each Round is repeated until the Rounds reach zero, or counted up until user decides to stop.

BEFORE you can begin your session, you must set your values for these.

While is normal clock mode:

1) Begin entering your FIGHT time value you wish to count down.
2) To add ROUNDS: Press (F4) > Then enter number of Rounds. (**Leave ZERO for Count up Rounds!**)
3) To add BONUS FIGHT time: Press (F1) and enter percentage (0-100%) of the whole FIGHT period. This time will be randomly calculated and added to each round.
4) For BLIND FIGHT BONUS: Press (F2) Now, the bonus time will be added but will count up at the end of the round and the users will not know when that round ends until the bell.
5) To add REST period between FIGHT times: Press (F3) > Then enter time of rest period.

If you need to change a value, press the corresponding Function Key.

When all chosen values are set, press: START to begin the sparring session.

Example: You want a sparring session with 3 minutes fights with 35% blind bonus, 3 minutes rest and 4 rounds of each. That's 14 key presses to set this up every time! You DON'T have to do this! You can make a ….

CUSTOM TIMING PROGRAMS

There are 10 custom program slots to use.

Each program has a NAME and up to 30 commands.

To call a programs:

  1-3 are the fastest shortcut keys from the main clock mode via F1 – F3 keys. Names are displayed there.

For programs 4-10,

  From Clock mode, Press MORE (F4) then press the corresponding number key matching the name displayed.

To add or change custom timing programs, you should:

- ALREADY have the clock connected to your wifi network in setup section of this manual!
- Have your program made and ready to enter. There is no guide or programming info displayed from the clock.

IMPORTANT! Command level error checking has been done however, a poorly thought out program may produce unpredictable results. If this happens, please double check your values and order of operations.

MAKE YOUR OWN CUSTOM TIMING PROGRAM

PROGRAMMING COMPONENTS

You must be aware of these components before you manipulate them in a program.

TIMERS: Three timers: # 1) Count DOWN, #2) Count UP, #3) Count DOWN
!! ONLY Timer 1 is used to determine command completion!

REGISTERS: Hold values used in timer programs:
Fight (Time) , **Rest** (Time), **Bonus** (%), **blind** (0,1), **Rounds** (#), **Rounds Increment** (0,1)

DISPLAYS: You can control the color and what timers or registers are displayed on:
T- Small LCD display, (Large LED): **U**- Main Upper, **V** –Bottom Right, **W**-Bottom Left.

PROGRAMMING COMMAND GUIDE

Programs will begin with the first command and after completion proceed to the next command sequentially until the Q (quit) command of the end of the line.
Each command and it's matching data value can be used in unique ways for a wide range of desired outcomes.

CMD	DATA	DESCRIPTION
A	--	**A**CTION : *MACRO* Calculates Fight, Rest, Rounds, Bonus, Blind Bonus. Set source T. REQUIRES: FIGHT value minimum must be set. For CMD A to use registers: Fight, Rest, Bonus, blind, Rounds must be set via their own their own commands. Example: Rounds are reset to zero !! Uses Timers #1 & #2
a	--	**a**ction GO: Executes plan made in **A** cmd. Like **G** but with Fight, Rest etc.. REQUIRES: **A** has been run for plan calculations. !! Uses Timers #1 & #2
B	0-100	**B**ONUS max % of the fight time register. Used to calculate bonus fight time randomly selected from 0 - max %, then added to total Fight time for this round only.
b	0 or 1	**b**LIND 0: Add bonus time to full fight time. 1: unknown count up at end of fight time. Note: b0 is not needed is Bonus time is set with B. b0 is default behavior.
C	1 or 3	**C**ommit program to wait for a countdown timer 1 or 3 to end. Note: This will NOT consider bonus values like the A command. BEWARE! Committing to a non running timer will never end!
D	0-59	**D**owntime, Rest Registry MINUTES are set. Note: M would need to be called after Rest Registry is set. If you want 2 minute rest, You do NOT have to set D2, then M0 using two commands. M120 (120 seconds) works.

d 0-59 **d**owntime, Rest Registry SECONDS are set. Note: See D above.

E 0-97 **E**ffect on the LED display. See table in appendix. 0 is Random

F 0-255 **F**ight MINUTES register are set.

f 0-255 **f**ight SECONDS register are set.

G 1-2-3 **G**o Timers. Starts timers according to table:

Data Value	Timer(s) Effected
1	1
2	2
3	3
12	1 & 2
13	1 & 3
23	2 & 3
123	1 & 2 & 3 (all)

H 1-8 **H**ammer Bell in pattern set in data: 1:Single (minimum delay), 2:Double 3:Triple 4:Double(slow), 5:Triple(slow) 6:Double(fast) 7:Triple(fast) 8:Racecar
NOTE: patterns of more than 1, have delays built in. So if you're using a bell in a loop while using a different timer, the bell command will introduce small time delays.

I 0-99 **I**nterval for Rounds to be Incremented or decremented when r is run.
Default is 1. Example: Rounds can be used to show 5 pushups every 15 seconds.

i 0 or 1 **i**ncrement or decrement rounds 1:Incremented or 0:Decremented
Note: Default is 1. Values other than 0 or 1 will be ignored.

L 0-255 **L**oop HEAD: Starts a looping section of cmds until loop "Tail." # of times is Data Value.

l -- **l**oop TAIL: Return to Loop "Head", reduce loop counter. When zero continue past tail.
REQUIRES: L Head was set or will be ignored.

M 0-255 **M**editate / Rest: *MACRO* Executes Rest Register in #1 Down timer countdown immediately. Make sure you set a display source to # 1 to see it.
If Rest Register is set, M will use that. If not, data values can be set as seconds.

N 0-255 **N**ap Time : device does nothing for the number of seconds in data.

P 0 or 1 **P**ause all timers and wait for user to press a button or virtual key.
0 is no bell, 1 is single bell.

Q -- **Q**uit the program and reset all registers, stop and reset all timers

R 0-255 **R**ounds Register is set to 0-99 immediately.
Note: Rounds set to 0 are for Count UP until 99.

r 0 or 1 **r**ounds calculations executed based on Interval and increment values.

S	0-255	**S**top Timers (will not erase their time) according to the table found in command G.
T	0 - 3	**T** LCD Display changes: Hundreds place is Source. WHY!!! No color! Have #3 here? SOURCES > 0:Clock, 1: #1timerDown, 2: #2 timerUP, 3: #3 timerDown
U	0-255	**U** LED Main Upper Display changes: Hundreds place is Source. Tens and Ones is Color SOURCES > 0:Clock, 1:timerDown, 2:timerUP
V	0-255	**V** LED Bottom Right Display changes: Hundreds place is Source. Tens and Ones is Color SOURCES > 0:Clock, 1:timerDown, 2:timerUP
W	0-255	**W** LED Bottom Left Display changes: Hundreds place is Source. Tens and Ones is Color SOURCES > 0:Clock SECONDS, 1:timerUP HOURS, 2: Rounds Registry

Notes for U, V, W:
You don't have to lead with 0 to set source 0.
Example: Set Main LED display to clock (source 0) in Yellow.
"U 3" ~~"U 003"~~, or Purple: "U 10" ~~"U 010"~~
You DO pad with zeros for color choice when source 1 or 2
Example: Set bottom right LED display to source to timerDown in color blue.
"V 108" ~~"V 1 8"~~, or Red "V 101"

COLOR TABLE
0: Black
1: Red
2: Orange
3: Yellow
4: Green
5: Dark Green
6: Teal
7: Cyan
8: Blue
9: Indigo
10: Purple
11: Magenta
12: Pink
13: White
14: Rainbow
15: RANDOM

X	0-99	**X** MINUTES to **#1** TimerDown.
x	0 - 59	**x** SECONDS to **#1** TimerDown.
Y	0-99	**Y** MINUTES to **#2** TimerUp.
y	0-59	**y** SECONDS to **#2** TimerUp.
Z	0-99	**Z** MINUTES to **#3** TimerDown.
z	0-59	**z** SECONDS to **#3** TimerDown.

Notes for commands X,x,Y,y,Z,z :
- These commands ADD the time to existing value on the timer.
- After program or timer reset, all timers are set to 0.
Hence, You do NOT need to enter seconds if you simply want 2 minutes.
- Data value: 255 on any of these will stop and reset this timer to 0.
- Run **G** cmd to Go / start it once it's set.

Example Programs

<u>Sparring</u> – 2 Minutes w/ 35% visible bonus fights with auto pause after. Rounds start at 1 and count up. There should be time for the clock setter to get back to match before fight bell. (#2)

	F	2	Set Fight Register to 2 min
	B	35	Random Bonus = 0 - 35%
	R	1	Set Round register to 1
	i	1	Rounds will be incremented up. Note: don't have to Interval, default is 1 !
	U	104	LED Main Upper Display to: #1 down timer, Color: Green
	V	14	LED Bottom Right Display to source: Clock, Color: Rainbow
	W	208	LED Bottom Left Display to source: Round, Color: Blue
----	L	99	Run the Loop max times. ----------
	A	0	Action Macro calculates values set above. (Note: using bonus needs A, not C cmds)
	N	3	Do nothing for 3 seconds, time to get to postions.
	H	1	Hammer Bell single to Bow to partner.
	a	0	BEGIN timers and process until they expire.
	H	2	Fight time's up, Hammer Bell double.
	N	1	Let the Bell finish before the Pause Bell.
	P	0	Pause Program with no bell and wait for user key (or virtual) press.
	r	0	Set rounds value based on R & i commands above.
----	l	0	Loop Tail ----------
	Q	0	Quit and reset back to clock mode.

<u>Pushups 50, TimeCountsDOWN</u> – 5 pushups every 15 seconds to total 50 over 10 cycles or 2:30. Rounds start at 0 and count up by 5 every cycle while clock counts DOWN to end. Every 15 seconds is a single bell and display color change. There should be time for the clock setter to get back to mat to participate. (#4)

	R	0	Rounds set to 0
	I	5	Rounds incremented (up by default) by value 5
	X	2	Set #1 Down timer to 2 minutes
	x	30	Set #1 Down timer to 30 seconds.
	T	1	Set LCD panel display for #1 count down timer.
	U	101	LED Main Upper Display to: #1 Down timer, Color: Red
	V	14	LED Bottom Right Display to source: Clock, Color: Rainbow
	W	213	LED Bottom Left Display to source: Round, Color: White
	N	5	Wait 5 seconds for user
	H	1	Hammer bell once
----	L	10	Loops 10 times
	U	115	LED Main Upper Display to: #1 Down timer, Color: Random
	z	15	#3 Down Timer set to 15 seconds
	G	13	Go Timers, both count down.
	C	3	Commit and wait for #3 down timer to finish it's 15 seconds.
	S	13	Stop both timers to keep them in sync.
	H	1	Hammer Bell once.
	r	0	Set rounds value based on R, I & i commands above.
----	l	0	Loop Tail
	N	2	2 seconds to see the final display.
	e	8	Set Effects time for 8 seconds
	E	0	Victory Effect #0 Random
	Q	0	Quit and reset back to clock mode.

<u>Ring Bell</u> – Simply ring bell twice. (#1)

H	2	Hammer Bell twice.
Q	0	Quit and reset back to clock mode.

(30's) Interval – 30 seconds for activity like stretch like V-sit. Repeats for Center, Left, Right, Center with 4 seconds to get to next position. There should be time for the clock setter to get back to mat before bell. (#3)

	f	30	Set Fight seconds
	R	1	Set Rounds to 1
	I	1	Rounds incremented (up by default) by value 1
	d	3	Rest time to 3 seconds.
	U	101	LED Main Upper Display to: #1 down timer, Color: Red
	V	14	LED Bottom Right Display to source: Clock, Color: Rainbow
	W	208	LED Bottom Left Display to source: Round, Color: Blue
	N	4	Do nothing for 4 seconds for clock user to get to match.
----	L	99	Run the Loop 4 times. ----------
	U	104	LED Main Upper Display to: #1 down timer, Color: Green
	A	0	Action Macro calculates values based on user entry via buttons.
	H	1	Hammer Bell single to do activity ie. stretch C, L, R, C.
	a	0	BEGIN timers and process until they expire.
	H	2	Position stretch time is up.
	N	1	Do nothing for 1 second.
	U	101	LED Main Upper Display to: #1 down timer, Color: Red
	M	0	Meditate / Rest for the period set by user via buttons.
	r	0	Set rounds value based on user entry values.
----	l	0	Loop Tail ----------
	Q	0	Quit and reset back to clock mode.

<u>Pressure Sparring</u> – One person is the defender. A row of attackers takes turns trying to get defender over mat line. Every 30 seconds, the attacker changes with a bell ring. With an unknown number of attackers each class. The loop should continue to count up on clock and rounds until user stops clock. (#5)

	R	1	Rounds set to 1
	i	1	Rounds will be incremented up.
	I	1	Rounds incremented by value 1
	T	2	Set LCD panel display for #2 count Up timer.
	U	204	LED Main Upper Display to: #2 Up timer, Color: Green
	V	14	LED Bottom Right Display to source: Clock, Color: Rainbow
	W	208	LED Bottom Left Display to source: Round, Color: Blue
----	L	99	Loops 99 times. ----------
	x	30	Set #1 Down timer to 30 seconds.
	G	12	Go Timers 1 & 2
	C	1	Commit and wait for #1 down timer to finish it's 30 seconds.
	S	12	Stop both timers to keep them in sync.
	H	1	Hammer Bell once.
	r	0	Set rounds value based on R, I & i commands above.
----	l	0	Loop Tail ----------
	Q	0	Quit and reset back to clock mode.

<u>Aggressor Sparring</u> – Goal is to improve attack combos more than 2-3 at a time. One person is the aggressor. One defender, who's goal is to attack much less, mainly practice defense. Two minute rounds, at 1 minute mark, a bell tells the combatants to switch roles. (#7)

	R	1	Rounds set to 1 (defaults for i and I are 1) i.e count rounds up by 1.
	T	1	Set LCD panel display for #1 count Down timer.
	U	104	LED Main Upper Display to: #1 Down timer, Color: Green
	V	14	LED Bottom Right Display to source: Clock, Color: Rainbow
	W	208	LED Bottom Left Display to source: Round, Color: Blue
----	L	99	Loops 99 times. ----------
	X	2	Set #1 Down timer to 2 minutes
	Z	1	Set #3 Down timer to 1 minute
	H	1	Hammer Bell to signify start of round.
	G	13	Go Timers 1 & 3
	C	3	Commit and wait for #3 down timer to finish it's 1 minute.
	H	1	Hammer Bell Single to change roles.
	C	1	Commit to #1 count down timer (with a minute left in the round).
	H	2	Hammer Bell to mark end of round.
	P	0	Pause and wait for user to begin a new round or exit.
----	l	0	Loop Tail ----------
	Q	0	Quit and reset back to clock mode.

<u>Interval Sparring for Endurance</u> – Even number of people are posted, the same even number rotate from post to post. 2 minute sparring with 2 minute rest and rotate. Meant to build sweat and endurance. Time should count down, with rounds counting by 1 up and continue until user stops. Time should be allowed in beginning for clock operator to get to match. (#6)

	R	1	Rounds set to 1
	i	1	Rounds will be incremented up. (default by 1)
	F	2	2 Minutes on the Fight Register.
	T	1	Set LCD panel display for #1 count down timer.
	V	13	LED Bottom Right Display to source: Clock, Color: White
	W	201	LED Bottom Left Display to source: Round, Color: Red
----	L	99	Loop 99 times ----------
	U	104	LED Main Upper Display to: #1 Down timer, Color: Green
	A	0	Action macro for fight calculation plan.
	N	3	Wait 3 seconds
	H	1	Hammer Bell single
	a	0	Execute plan from A
	H	2	Mark end of fight with bell.
	N	3	Wait 3 seconds.
	U	101	LED Main Upper Display to: #1 Down timer, Color: Red
	M	120	Meditate / Rest for Downtime set at 2 minutes
	r	0	Calculate and modify Rounds
----	l	0	Loop Tail ----------
	Q	0	Quit and reset back to clock mode.

<u>Pushups 50, TimeCountUP</u> – 5 pushups every 15 seconds to total 50 over 10 cycles or 2:30. Rounds start at 0 and count up by 5 every cycle while clock counts UP to end. There should be time for the clock setter to get back to mat to participate.

	R	0	Rounds set to 0
	i	1	Rounds will be incremented up.
	I	5	Rounds incremented by value 5
	T	2	Set LCD panel display for #2 count up timer.
	U	204	LED Main Upper Display to: #2 Up timer, Color: Green
	V	13	LED Bottom Right Display to source: Clock, Color: White
	W	201	LED Bottom Left Display to source: Round, Color: Red
	N	3	Time for user to get to mat.
----	L	10	Loops 10 times ----------
	z	15	#3 Down Timer set to 15 seconds
	G	23	Go Timers. Count up begins on #2.
	C	3	Commit and wait for #3 down timer to finish it's 15 seconds.
	S	23	Stop both timers to keep them in sync.
	H	1	Hammer Bell once.
	r	0	Set rounds value based on R, I & i commands above.
----	l	0	Loop Tail ----------
	e	8	Set Effects time for 8 seconds
	E	0	Victory Effect #0 Random
	Q	0	Quit and reset back to clock mode.

<u>Display LED display full screen effects.</u> Show 99 random LED display effects for 8 seconds each. (#10)

	e	8	Set Effects time to 8 seconds
	T	0	LCD display to clock
----	L	99	Loop 99 times ----------
	E	0	Full display Effect #0 Random
----	l	0	Loop Tail ----------
	Q	0	Quit and reset back to clock mode.

<u>Manual Value Entry Program</u> Used after number pad entry. (For reference, can't be changed)

	V	13	LED Bottom Right Display to source: Clock, Color: White
	W	208	LED Bottom Left Display to source: Round, Color: Blue
-----	L	1	Loop Head will execute at least 1 time. ----------
	U	114	LED Main Upper Display to: #1 down timer, Color: Rainbow
	A	0	Action Macro calculates values based on user entry via buttons.
	N	2	Do nothing for 2 seconds
	H	1	Hammer Bell single to Bow to partner.
	a	0	BEGIN timers and process until they expire.
	H	2	Fight time's up, Hammer Bell Double
	N	2	Do nothing for 2 seconds
	U	101	LED Main Upper Display to: #1 down timer, Color: Red
	M	0	Meditate / Rest for the period set by user via buttons.
	r	0	Set rounds value based on user entry values.
----	l	0	Loop Tail ----------
	Q	0	Quit and reset back to clock mode.

TABLE OF EFFECTS for command E

0	RANDOM OF ALL 93 EFFECTS
1	Confetti Pops
2	Confetti Clusters
3	City Light Cycles
4	Confetti Party
5	Chasing Rainbow Comet
6	Juggle Confetti
7	Push Pull w/ Rainbow Colors
8	Eiffel Sparkle w/ Random Colors
9	Eiffel Sparkle Max w/ Random Colors
10	Push Pull Colors w/ Random choices
11	Pulse w/ Random colors
----- Eiffel Sparkle Single Colors ------	
12	Eiffel Sparkle RED
13	Orange
14	Yellow
15	Green
16	Cyan
17	Blue
18	Purple
19	Pink
20	White
----- Eiffel Sparkle Max Single Colors ------	
21	Eiffel Sparkle Max RED
22	Orange
23	Yellow
24	Green
25	Cyan
26	Blue
27	Purple
28	Pink
29	White

----- Push Pull 2 Colors -----	
30	Red w/ Orange
31	Red w/ Yellow
32	Red w/ Green
33	Red w/ Cyan
34	Red w/ Blue
35	Red w/ Purple
36	Red w/ Pink
37	Red w/ White
38	Orange w/ Yellow
39	Orange w/ Green
40	Orange w/ Cyan
41	Orange w/ Blue
42	Orange w/ Purple
43	Orange w/ Pink
44	Orange w/ White
45	Yellow w/ Green
46	Yellow w/ Cyan
47	Yellow w/ Blue
48	Yellow w/ Purple
49	Yellow w/ Pink
50	Yellow w/ White
51	Green w/ Cyan
52	Green w/ Blue
53	Green w/ Purple
54	Green w/ Pink
55	Green w/ White
56	Cyan w/ Blue
57	Cyan w/ Purple
58	Cyan w/ Pink
59	Cyan w/ White
60	Blue w/ Purple
61	Blue w/ Pink
62	Blue w/ White
63	Purple w/ Pink
64	Purple w/ White
65	Pink w/ White

----- Pulse 2 Colors -----	
66	Red w/ Orange
67	Red w/ Yellow
68	Red w/ Green
69	Red w/ Blue
70	Red w/ Purple
71	Red w/ Pink
72	Red w/ White
73	Orange w/ Yellow
74	Orange w/ Green
75	Orange w/ Blue
76	Orange w/ Purple
77	Orange w/ Pink
78	Orange w/ White
79	Yellow w/ Green
80	Yellow w/ Blue
81	Yellow w/ Purple
82	Yellow w/ Pink
83	Yellow w/ White
84	Green w/ Blue
85	Green w/ Purple
86	Green w/ Pink
87	Green w/ White
88	Blue w/ Purple
89	Blue w/ Pink
90	Blue w/ White
91	Purple w/ Pink
92	Purple w/ White
93	Pink w/ White

HARDWARE DETAILS

- ESP32-S2 RWOVER Dev board (pinout below)
- I2C 2004 LCD Module 20x04 LCD Screen Module Display
- Matrix Membrane Switch, 4 x 4 Universal Array Keypad with 8 Pin 2.54mm Pitch Female Connector
- BH1750FVI Chip Light Intensity Light Module
- TXS0108E High Speed Full Duplex 8 Way 8 Channel Level Conversion Module 8-Bit 8 Logic Level Bi-Directional
  Used to 1) uplogic LED comms & Bell from 3.3v to 5v and 2) wire boost LED strip signal to display.
- LM2596 DC to DC High Efficiency Voltage Regulator 3.2-35V to 1.25-30V Buck Converter – in Display, Set 5V
- 18/4 Shielded Wire 30FT,18AWG 4 Conductor Shielded Cable Stranded Pure Copper CNC Wire
  Pinout: 5V (red) and ground(black) down from display, Data (yellow) LED strip (5V), Bell (blue) relay (5V)

BELL ----

- JF-Z05 DC 12V 2. 5A Magnetic Solenoid 45N 15 mm Push Open Frame Electromagnet - Relay For Bell
- 1 Channel High Level Driver Module Optocoupler Relay Module Isolated Drive Control Board – Bell Relay

DISPLAY-----

- W2815 LED strip 12 Volt, 576 individually programmable LEDs.
- 6 Way Fuse Block,12V Blade Fuse 6 Circuit ATC/ATO Waterproof Fuse Box Holder with LED Indicator

PSU ----

Waterproof IP67 LED Transformer - 250W 12V, 110V AC to 12V DC Low Voltage Output with 3-Prong Plug

ESP32 PINOUT # (name)

1(3V3) rail decoupled w/
22 µF electrolytic/tantalum
in parallel with a
0.1 µF ceramic capacitor.
4 (2) – Beeper
5(3) – I2C SDA
6(4) – I2C SCL
47 K 3.3 V pull-ups *
7(5) – Keypad C4 *
8(6) – C3 *
9(7)–C2 *
10(8) – C1 *
4.7 K Series Resistors **
11(9)- Keypad Row 4**
12(10)-R3**
13(11)-R2**
14(12)-R1**
15(13)- Bell
16(14) – LED Strip comms
20(5V) – Supply, ***21***(GND)

ESP32-S2-DevKitM-1

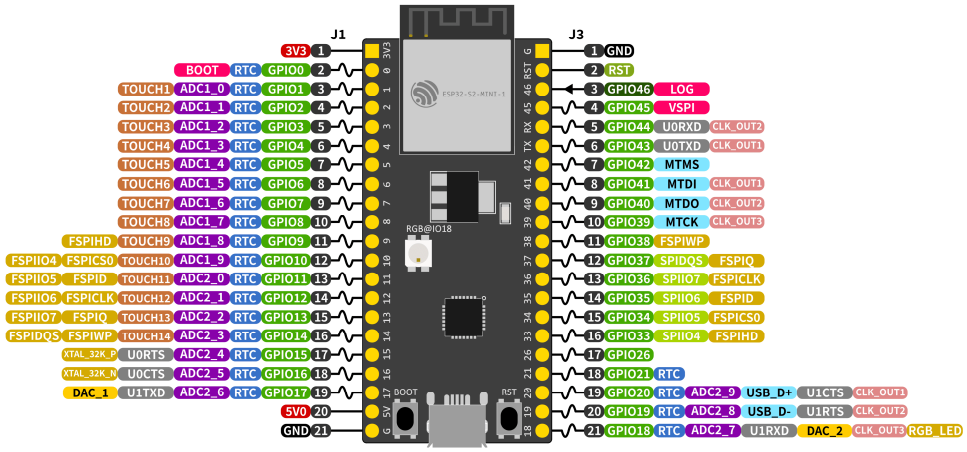

ESP32-S2 Specs
32-bit Xtensa® single-core @240MHz
Wi-Fi IEEE 802.11 b/g/n 2.4GHz
320 KB SRAM (16 KB SRAM in RTC)
128 KB ROM
43 GPIOs, 4x SPI, 2x UART, 2x I2C,
Touch, I2S, RMT, LED PWM, USB-OTG,
TWAI®, 2x 8-bit DAC, 12-bit ADC

WARNING!!! BEFORE YOU PROGRAM VIA USB, YOU MUST UNPLUG 5 VOLT SUPPLY INSIDE CONSOLE (MARKED WITH RED STICKER) AND MAIN PSU. USING BOTH 5 VOLT SUPPLIES WILL DESTROY THE BOARD !