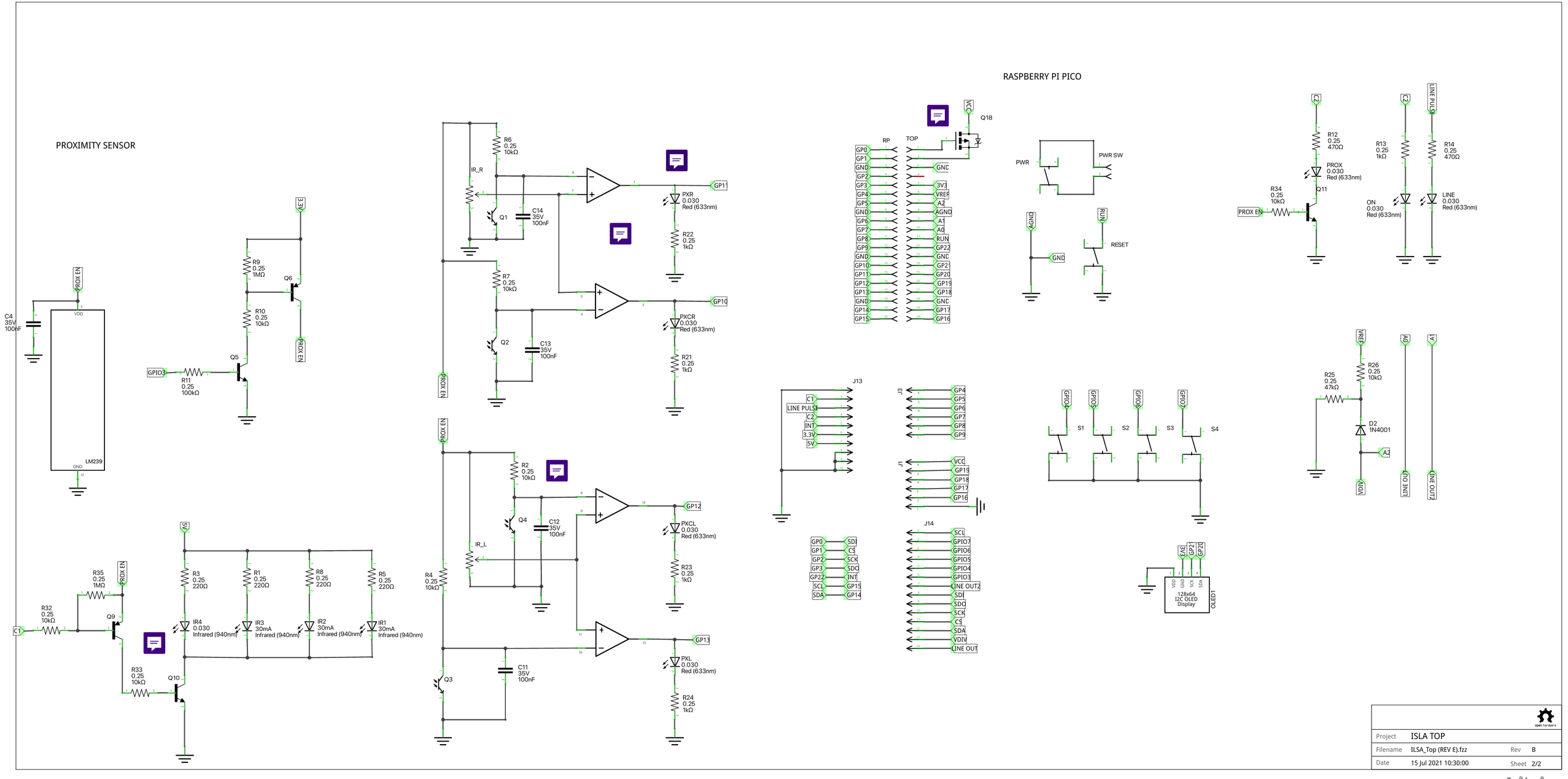
PROXIMITY SENSOR
RASPBERRY PI PICO
LM239
VDD
GND
C4
35V
100nF
PROX EN
3.3V
R9
0.25
1MΩ
Q6
R10
0.25
10kΩ
Q5
GPIO3
R11
0.25
100kΩ
R6
0.25
10kΩ
IR_R
Q1
C14
35V
100nF
R7
0.25
10kΩ
Q2
C13
35V
100nF
GP11
PXR
0.030
Red (633nm)
R22
0.25
1kΩ
GP10
PXCR
0.030
Red (633nm)
R21
0.25
1kΩ
R2
0.25
10kΩ
Q4
C12
35V
100nF
IR_L
R4
0.25
10kΩ
Q3
C11
35V
100nF
GP12
PXCL
0.030
Red (633nm)
R23
0.25
1kΩ
GP13
PXL
0.030
Red (633nm)
R24
0.25
1kΩ
5V
R35
0.25
1MΩ
Q9
R32
0.25
10kΩ
C1
R33
0.25
10kΩ
Q10
R3
0.25
220Ω
R1
0.25
220Ω
R8
0.25
220Ω
R5
0.25
220Ω
IR4
0.030
Infrared (940nm)
IR3
30mA
Infrared (940nm)
IR2
30mA
Infrared (940nm)
IR1
30mA
Infrared (940nm)
RP
TOP
Q18
VCC
GP0
GP1
GND
GP2
GP3
GP4
GP5
GND
GP6
GP7
GP8
GP9
GND
GP10
GP11
GP12
GP13
GND
GP14
GP15
GND
3V3
VREF
A2
AGND
A1
A0
RUN
GP22
GND
GP21
GP20
GP19
GP18
GND
GP17
GP16
PWR
PWR SW
AGND
GND
RUN
RESET
R12
0.25
470Ω
PROX
0.030
Red (633nm)
Q11
R34
0.25
10kΩ
PROX EN
R13
0.25
1kΩ
ON
0.030
Red (633nm)
R14
0.25
470Ω
LINE
0.030
Red (633nm)
LINE PULSE
J13
C1
LINE PULSE
C2
INT
3.3V
5V
J3
GP4
GP5
GP6
GP7
GP8
GP9
J1
VCC
GP19
GP18
GP17
GP16
GP0
GP1
GP2
GP3
GP22
SCL
SDA
SDI
CS
SCK
SDO
INT
GP15
GP14
J14
SCL
GPIO7
GPIO6
GPIO5
GPIO4
GPIO3
LINE OUT2
SDI
SDO
SCK
CS
SDA
VDIV
LINE OUT
S1
S2
S3
S4
GPIO4
GPIO5
GPIO6
GPIO7
3V3
GP21
GP20
VDD
GND
SCK
SDA
128x64
I2C OLED
Display
OLED1
R25
0.25
47kΩ
R26
0.25
10kΩ
D2
1N4001
VREF
A0
A1
A2
VDIV
LINE OUT
LINE OUT2
Project
ISLA TOP
Filename
ILSA_Top (REV E).fzz
Rev
B
Date
15 Jul 2021 10:30:00
Sheet
2/2
fritzing