02 Anatomy of an IoT Thing

1. What is an IoT Thing?

> ⓘ **Definition**
>
> An IoT "Thing" is a physical device embedded with electronics, such as sensors, actuators, and microcontrollers, designed to interact with its environment and communicate over the Internet . Unlike traditional computers, IoT Things prioritize energy efficiency, real-time responsiveness, and environmental interaction.

IoT Things, like smart watches, are computer-based but optimized for specific tasks with limited resources. They are built to handle diverse inputs/outputs (I/O) and operate reliably under constraints like battery power.

Example: Smart Watch

- **Sensors**: Heart rate, motion, temperature.
- **Actuators**: Vibration motor, display.
- **Microcontroller**: Processes data and manages I/O.
- **Connectivity**: Wi-Fi or Bluetooth for data exchange.

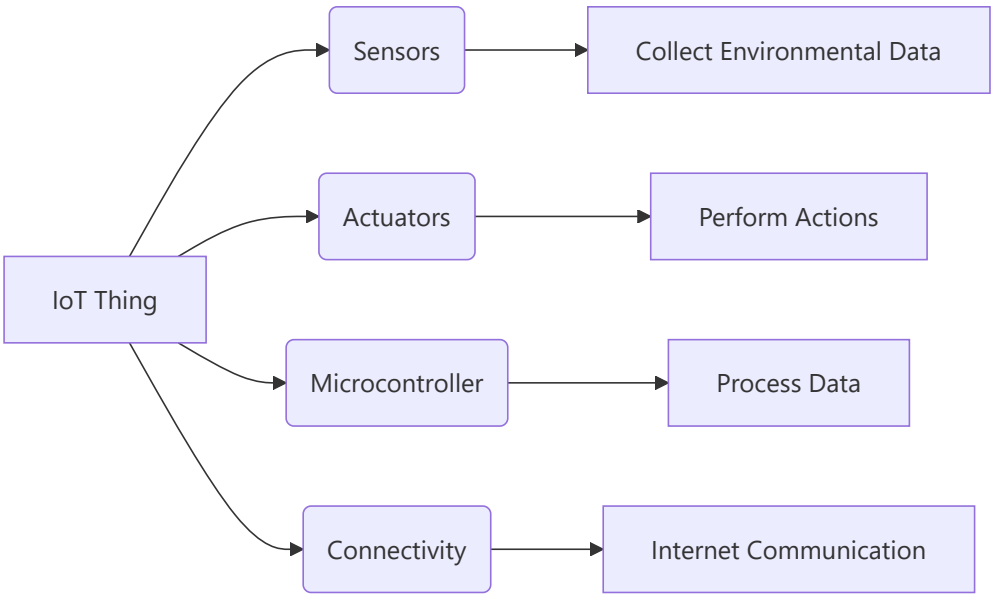

2. Why Are IoT Things Different from Traditional Computers?

IoT Things vs. Computers

IoT Things are designed for environmental interaction and resource efficiency, contrasting with traditional computers built for data-intensive tasks. This distinction drives their unique architecture and functionality.

Comparison

Feature	Traditional Computers	IoT Things
Purpose	Data-intensive computing	Environment interaction
Memory/Storage	Large, hierarchical	Limited, small
Processors	Powerful, general-purpose (CISC)	Specialized, low-power (RISC)
Network	Fast, reliable connections	Slow, less reliable connections
User Interface	Large screens, keyboards	Simple or headless
I/O Capabilities	Limited (USB, serial, etc.)	Diverse (analog, digital, noisy)
Power	Grid-powered, no issue	Battery-powered, energy-constrained
Reliability	Reliable, not failsafe	Failsafe, real-time response
Design Focus	Capacity, performance	Energy saving, minimal components

Architectural Differences

- **Computers**: Use multiple buses, large memory, and buffered I/O for high performance. Optimized for stored-program serial processing and expansion.
- **IoT Things**: Require minimal processing power, small fast memory, and real-time I/O responses. Focus on fail-safe operation and single-purpose functionality.

For further details, check TechTarget on IoT Devices.

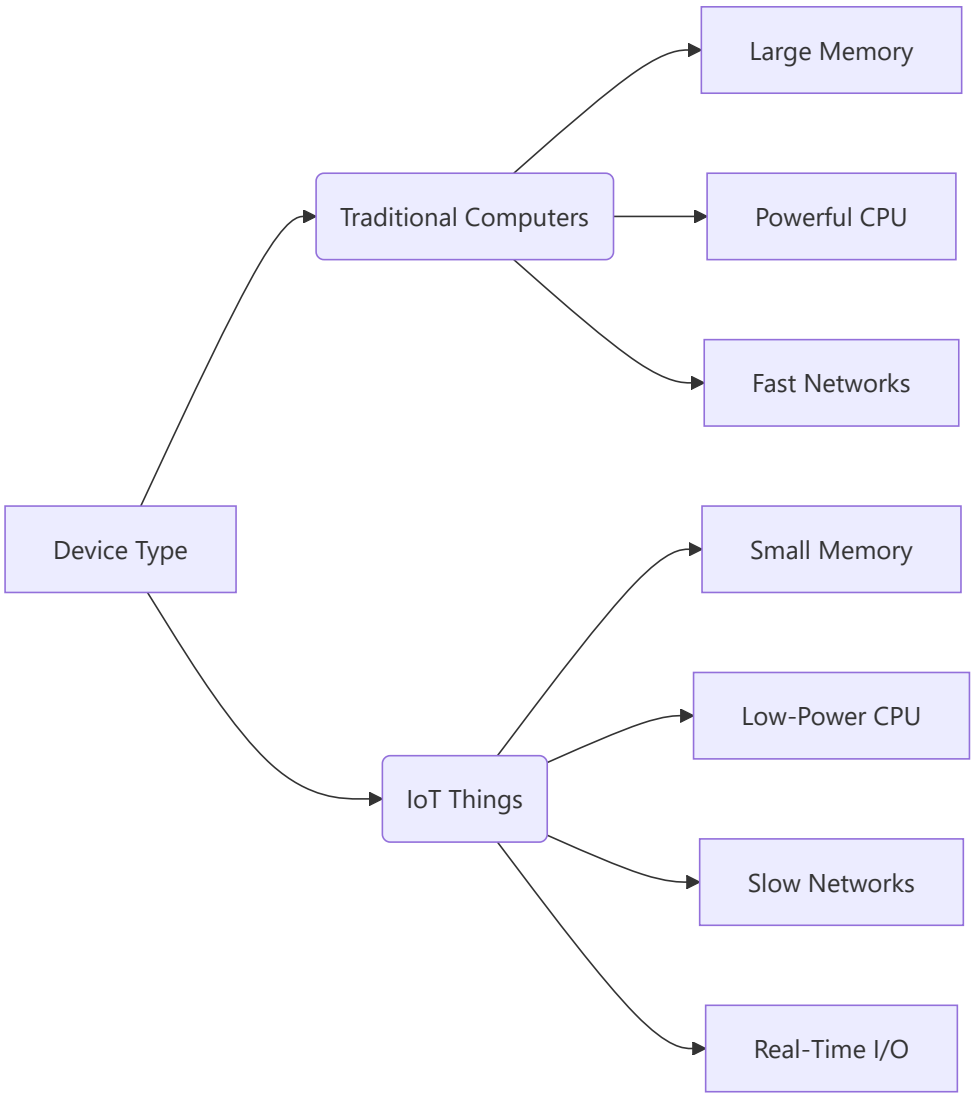

3. Examples of IoT Things

Real-World Examples

IoT Things span consumer, commercial, and industrial applications, each leveraging unique hardware and software to interact with their environments.

- **Smart Watch**: Monitors health metrics and syncs with smartphones (Fitbit).
- **Smart Thermostat**: Adjusts home temperature based on occupancy (e.g., Nest Thermostat).
- **Industrial Sensor**: Monitors machinery health in factories for predictive maintenance.
- **Connected Car Module**: Provides diagnostics and navigation (e.g., Tesla's IoT systems).

Smart Thermostat

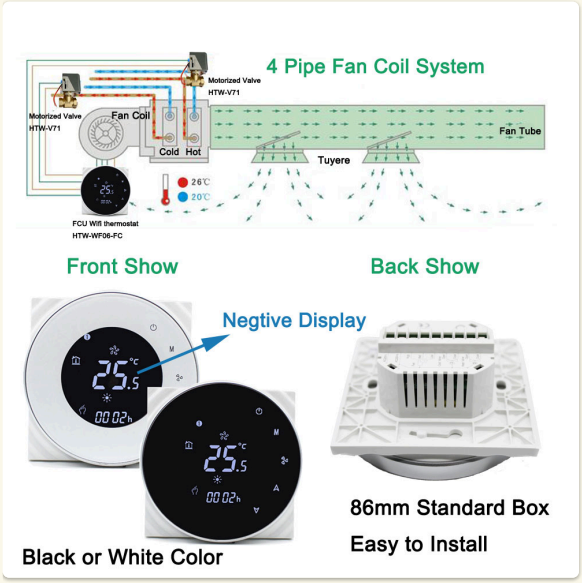

Explore more examples at [Popular IoT Devices in 2025]

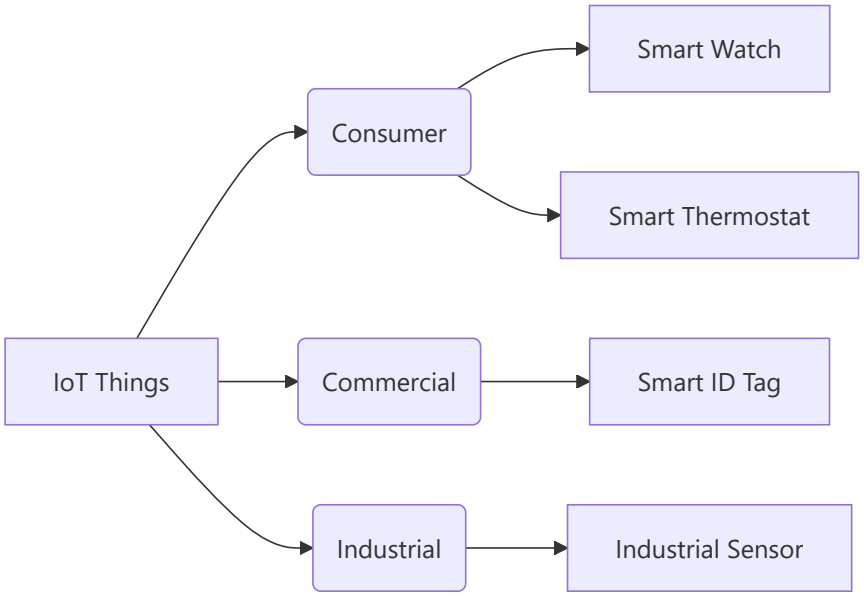

4. Issues and Challenges in Designing IoT Things

⚠ Design Challenges

Creating IoT Things involves overcoming constraints in power, processing, and reliability, which pose significant challenges.

- **Power Constraints**: Battery-powered devices must minimize energy use, limiting processing capabilities.
- **Limited Resources**: Small memory and low-power processors restrict complex computations.
- **Real-Time Requirements**: IoT Things must respond instantly to environmental changes, requiring efficient I/O handling.
- **Reliability**: Devices must operate in noisy or unstable environments with fail-safe mechanisms.
- **Cost and Scalability**: Minimizing components reduces costs but complicates design for large-scale deployment.

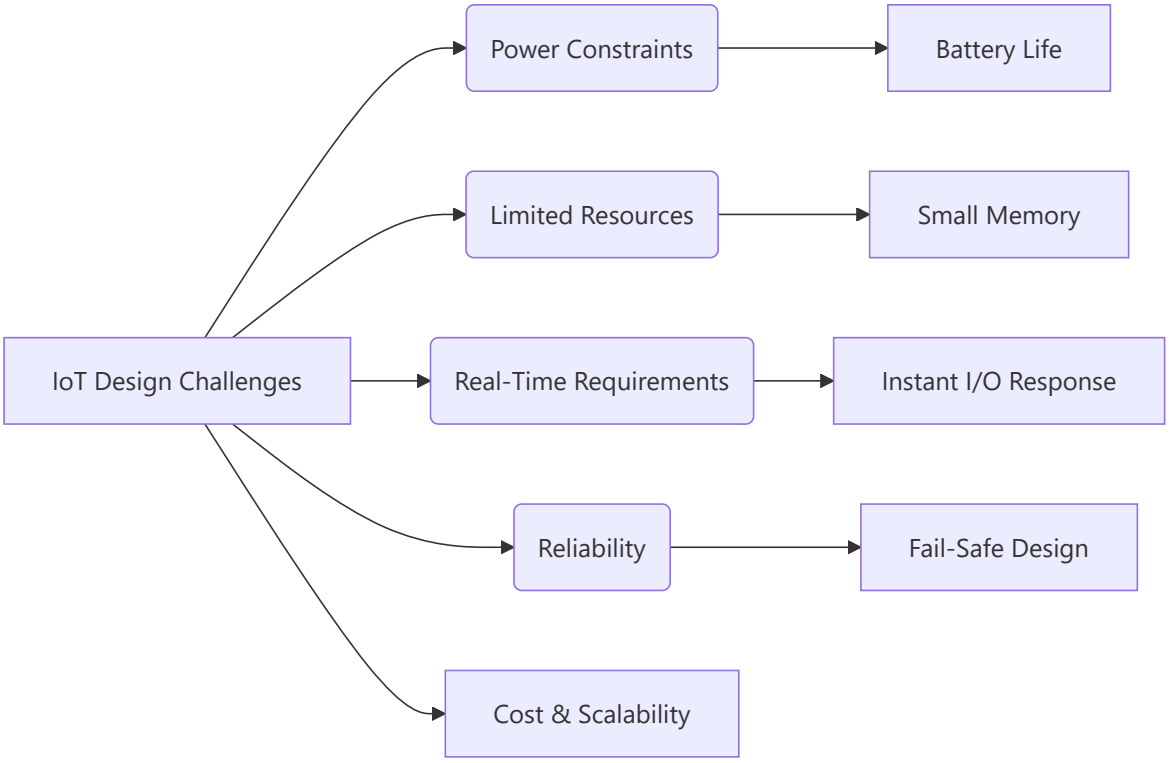

5. Components of an IoT Thing

Component Categories

IoT Things are built using hardware and software components optimized for low power, real-time interaction, and connectivity. These are categorized below.

Hardware Components

- **Microcontrollers**: System-on-Chip (SoC) units like AVR, ESP8266, or ESP32, with RISC processors for control tasks.
  - Example: ESP32 with Wi-Fi/Bluetooth (Espressif).
- **Sensors**: Collect environmental data (e.g., temperature, motion).
- **Actuators**: Execute actions (e.g., motors, LEDs).
- **I/O Modules**: Support analog and digital interfaces for diverse devices.
- **Power Management**: Includes batteries, resistors, and capacitors for energy efficiency.
- **Development Boards**: Platforms like Arduino or NodeMCU for prototyping.

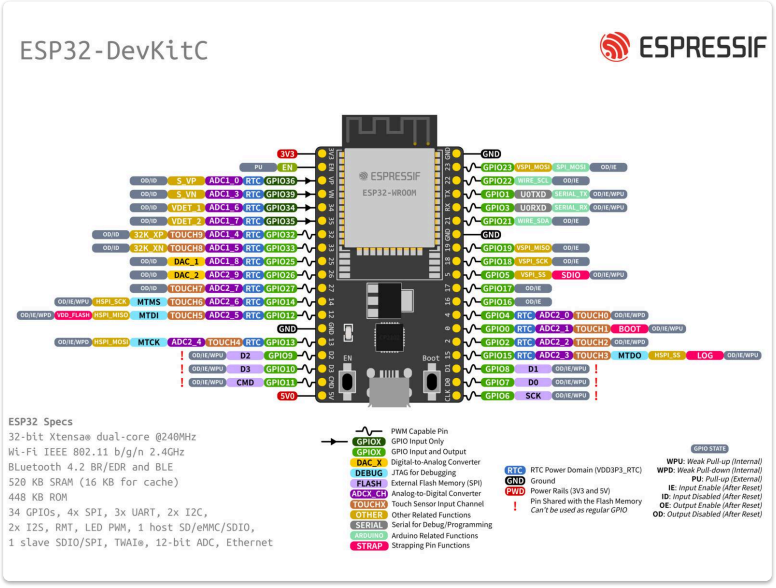

Software Components

- **Embedded Firmware**: Runs on microcontrollers for device control.
- **Development Framework**: Tools like Arduino IDE or PlatformIO.
- **Programming Languages**: C/C++ for embedded systems.
- **Libraries**: Interface libraries for sensors, peripherals, and communication (e.g., MQTT).
- **Compilers/Debuggers**: Tools for code compilation and error checking.
- **Embedded OS**: Optional for complex devices (e.g., FreeRTOS).

Communication Components

- **Protocols**: MQTT, CoAP for lightweight data exchange.
- **Interfaces**: Wi-Fi, Bluetooth, or serial for connectivity.

Development Tools

- **IDE**: Arduino IDE or VS Code with PlatformIO.
- **Programming Port**: USB for firmware uploads.
- **Debugging Tools**: In-circuit debuggers for troubleshooting.

For technical specifications, refer to Arduino Official Site.

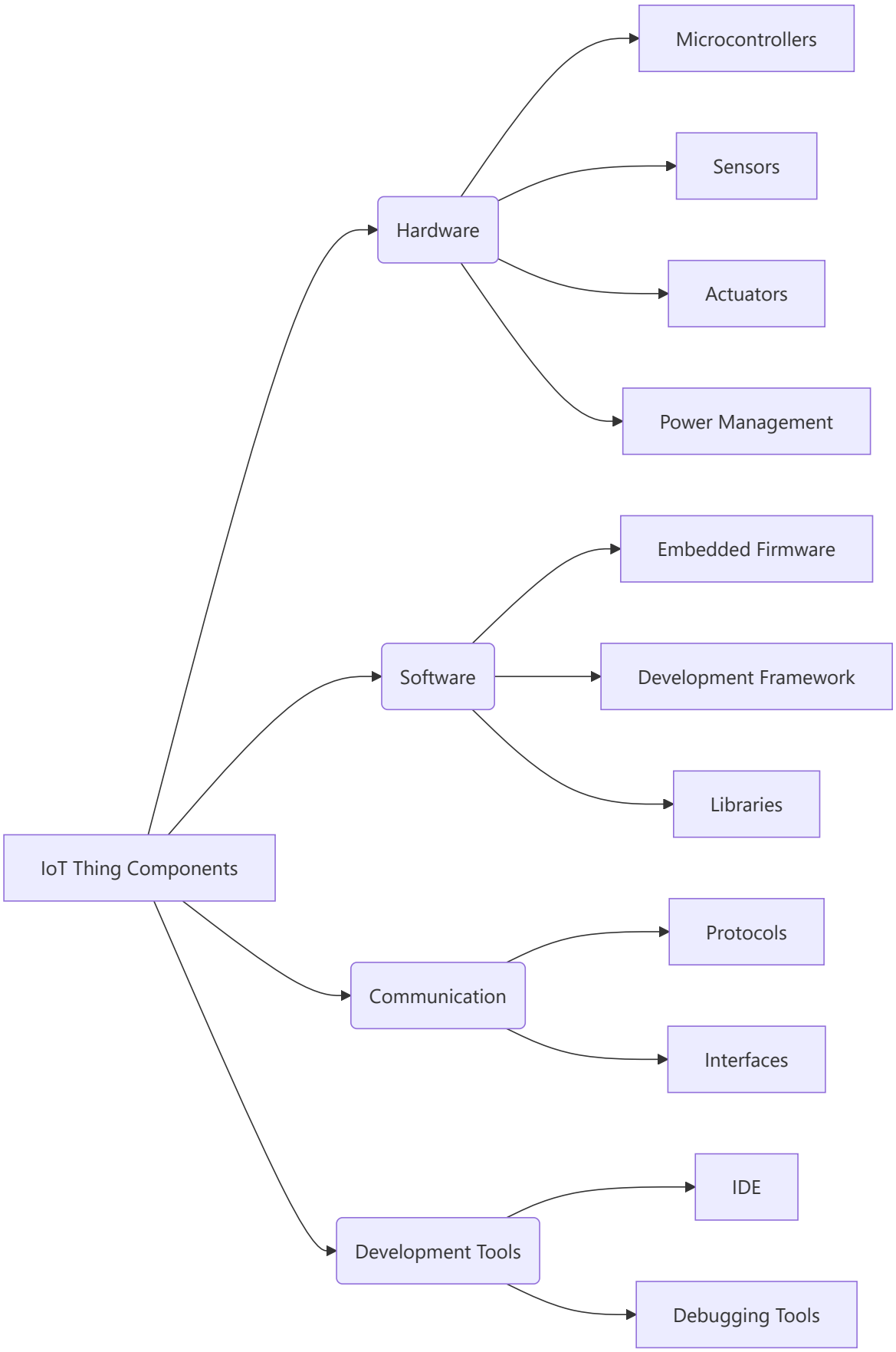

6. Microcontrollers: The Heart of IoT Things

ⓘ **Microcontrollers vs. Microprocessors**

Microcontrollers are optimized for control tasks in IoT Things, unlike microprocessors used in traditional computers.

Comparison

Feature	Microprocessors	Microcontrollers
Power Dissipation	High (e.g., 95W)	Low (e.g., 0.25W)
Clock Speed	High (e.g., 5.0 GHz)	Low (e.g., 4 MHz)
Instruction Set	Large, CISC (1000+ instructions)	Small, RISC (e.g., 35 instructions)
Memory	External, large	Built-in, small (e.g., 8K ROM)
Design	Requires external components	System-on-Chip (SoC)
Use Case	Data processing	Control applications

Popular Microcontrollers

- **AVR**: 8-bit, up to 20 MHz, used in Arduino boards.
- **ESP8266**: Wi-Fi-enabled, 32-bit RISC, ideal for IoT connectivity.
- **ESP32**: Dual-core, Wi-Fi/Bluetooth, supports complex applications.
- **Parallax Basic Stamp**: Early SoC with 50 MHz and limited I/O.

ESP32 SoC (System on Chip)

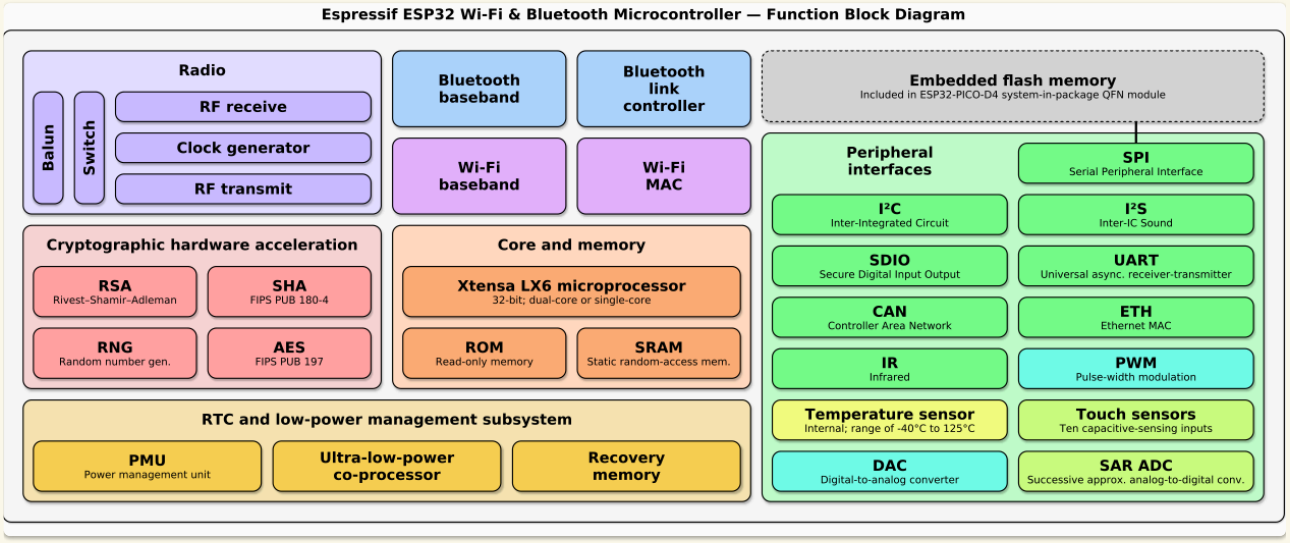

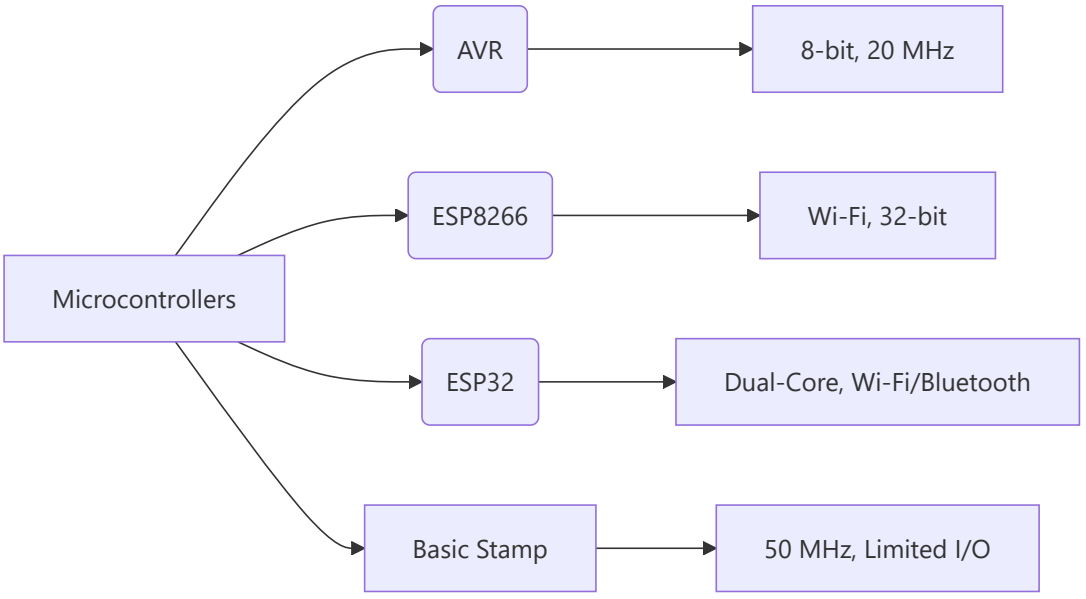

7. Software Design for IoT Things

Data-Driven vs. I/O-Driven

IoT Things rely on I/O-driven software, contrasting with data-driven software in traditional computers.

Comparison

Feature	Data-Driven (Computers)	I/O-Driven (IoT Things)
Data Source	Memory-loaded, synchronous	Environment, asynchronous
Memory Usage	Large, fast-access	Limited, less critical
Processing	Serial, number-crunching	Real-time, event-based
Event Handling	Internal events	Multiple external events
Response Time	Non-critical	Guaranteed, immediate

Implications

- IoT software must handle asynchronous data from sensors, process multiple events simultaneously, and ensure real-time responses.
- Example: A smart thermostat adjusts temperature based on sensor data, requiring instant processing.
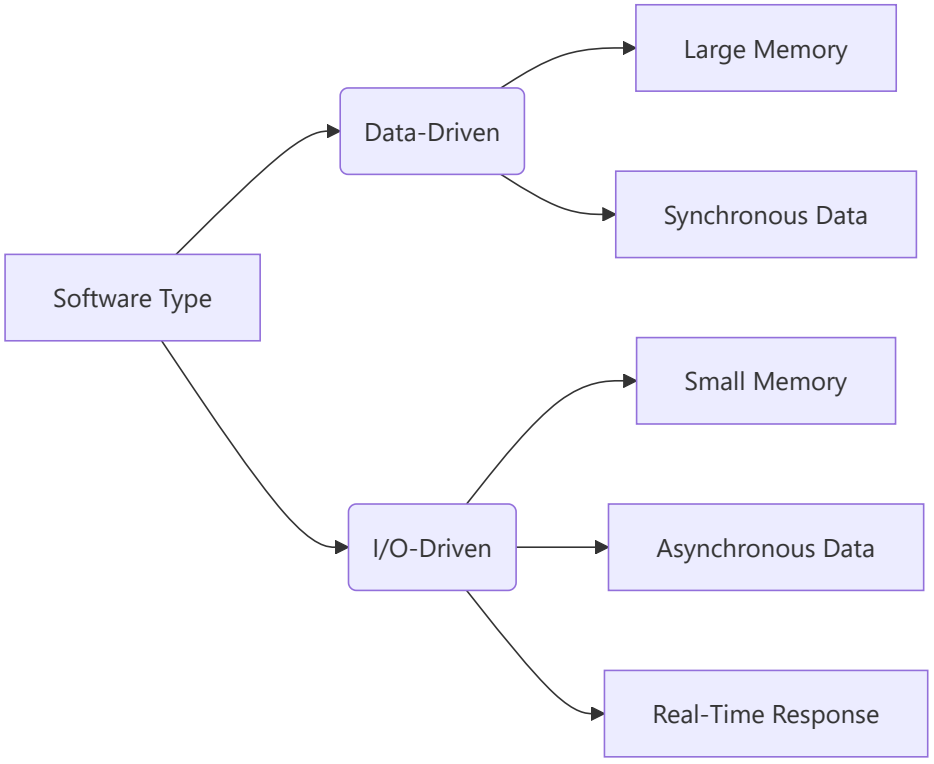
For software design tips, visit Embedded.com.