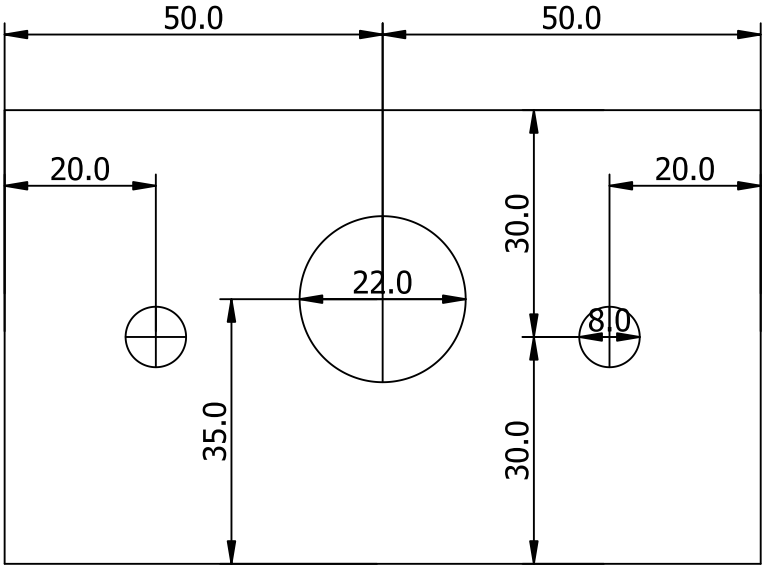
50.0
50.0
20.0
20.0
30.0
22.0
8.0
35.0
30.0

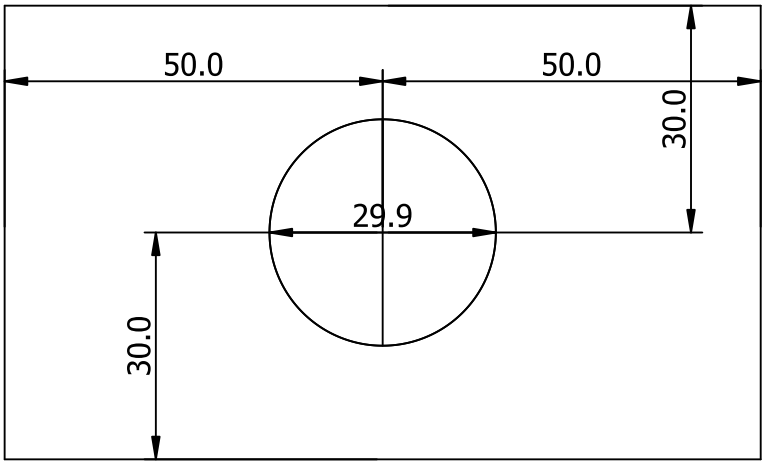
50.0
50.0
30.0
29.9
30.0

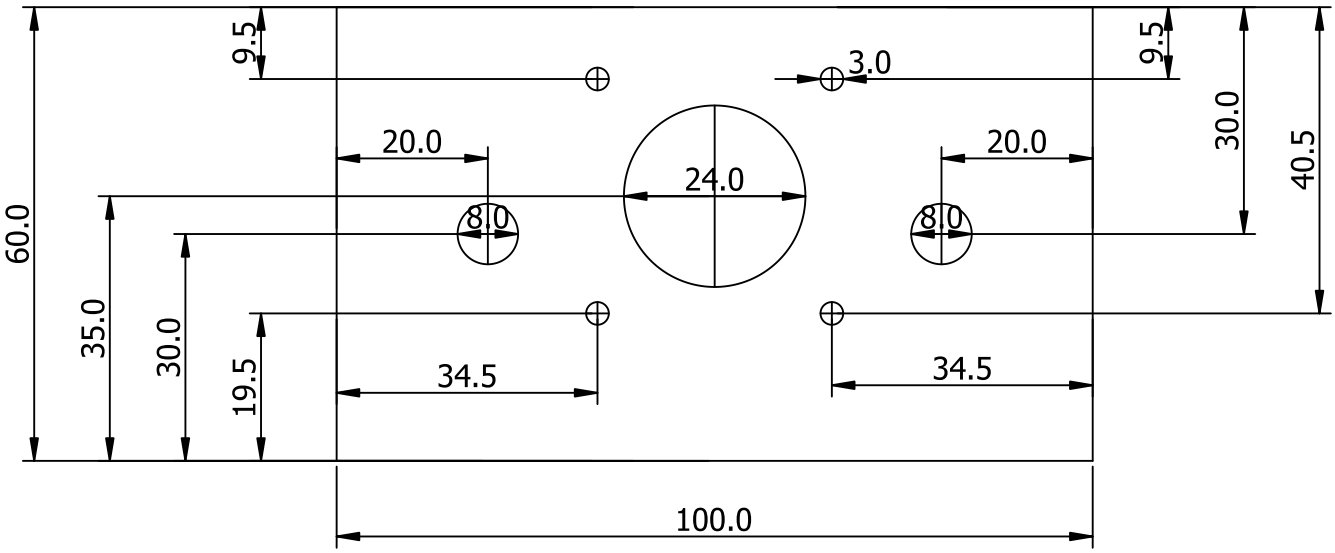
9.5
3.0
9.5
30.0
40.5
20.0
20.0
24.0
8.0
8.0
60.0
35.0
30.0
19.5
34.5
34.5
100.0