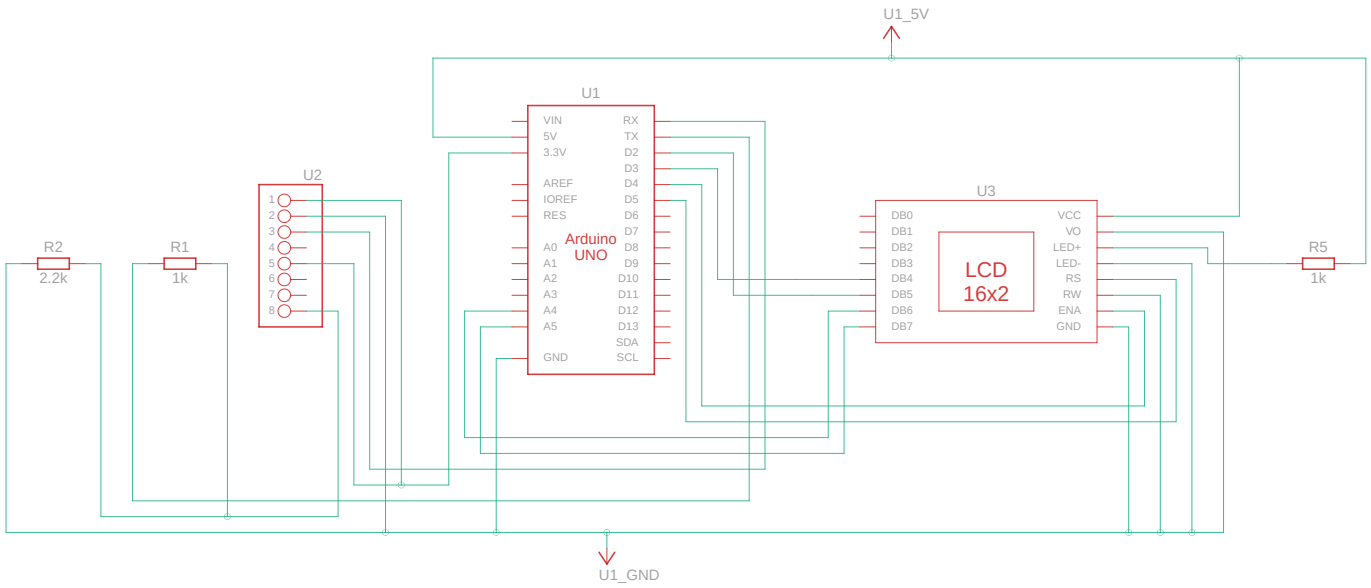

Made with Tinkercad®

Title: Smart Baggage Tracking System	
Date: 3/22/2024, 3:50:43 PM	Sheet: 1/1