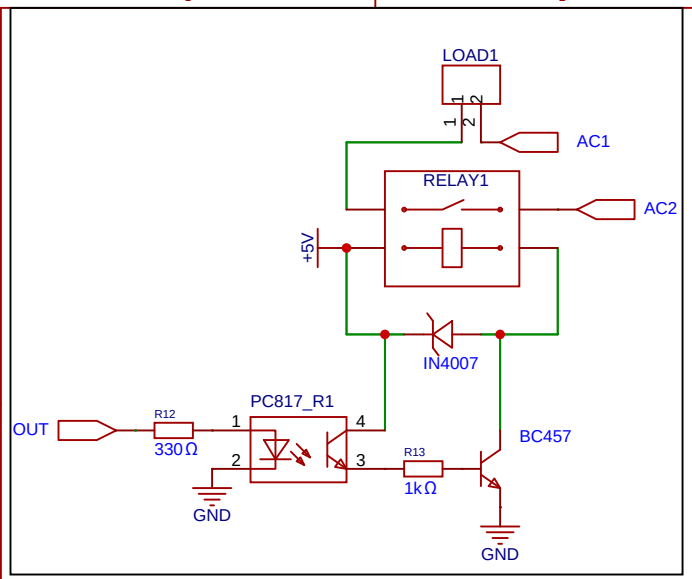

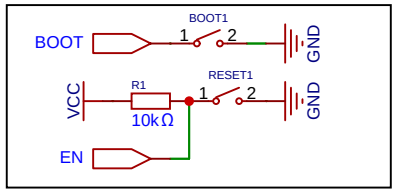

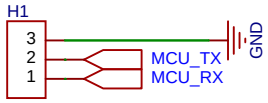

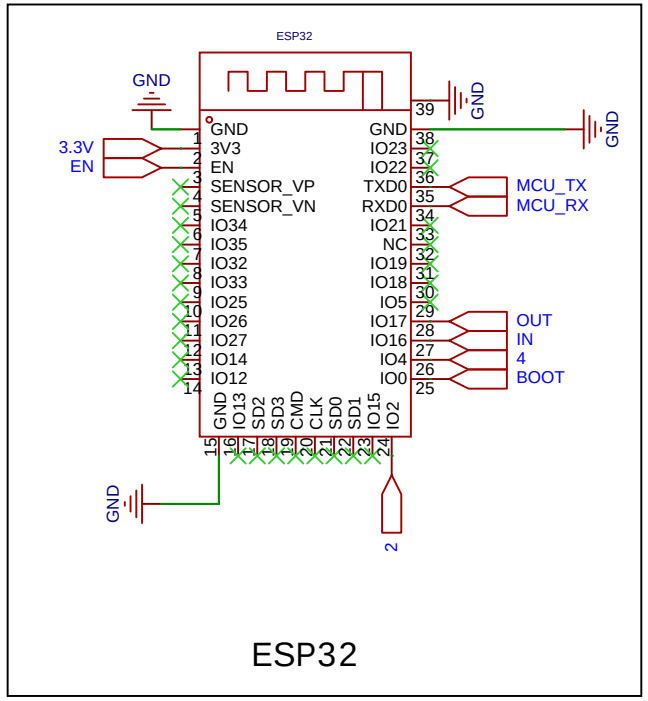

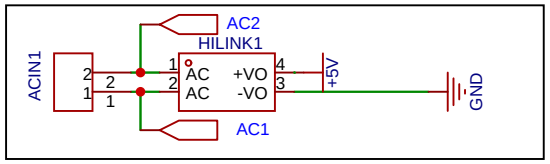

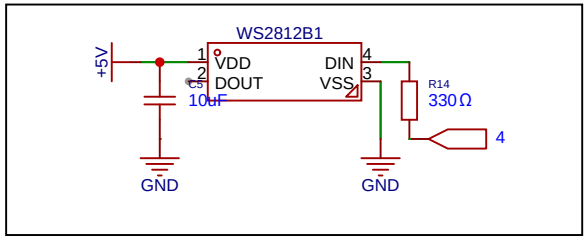

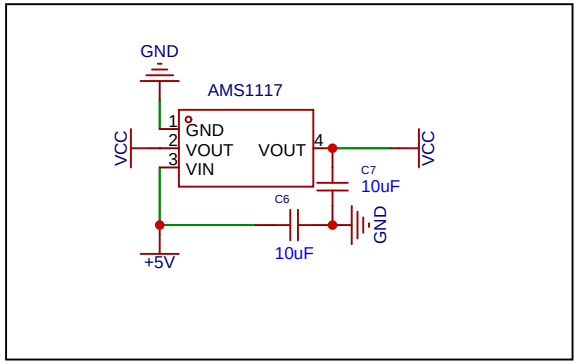

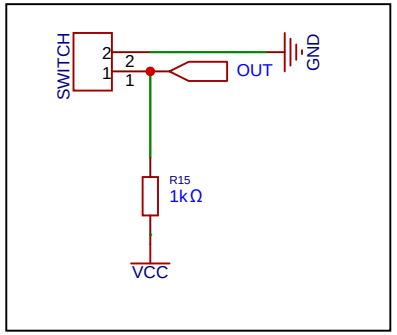

Schematic	Schematic2	Update Date	2024-08-05
		Create Date	2024-08-05
Page	P1	Part Number	JLCPCB-002
Drawn	EasyEDA	Home automation	
Reviewed	EasyEDA		
		VER	SIZE	PAGE 1 OF 1
EasyEDA		V0.1	A4	EasyEDA.com