FOR OFFICIAL USE ONLY

GENERAL MANAGER'S

ANNUAL REPORT

2010 - 2011

रेल कोच फैक्टरी, कपूरथला

RAIL COACH FACTORY,KAPURTHALA

Shri Sanjiv Handa, Member Mechanical, Railway Board inaugurating New Paint Shop

Czech Republic delegation visited RCF

रेल कोच फैक्टरी , कपूरथला

Rail Coach Factory, Kapurthala

मैं 31 मार्च 2011 को समाप्त हुए वर्ष के लिए रेल डिब्बा कारखाना, कपूरथला के कार्य की रिपोर्ट अग्रेषित कर रहा हूँ।

I, forward herewith, the report on the working of Rail Coach Factory, Kapurthala for the year ending 31st March,2011.

(के के सक्सेना)
महाप्रबंधक

(K.K.Saxena)
General Manager

सचिव,
रेलवे बोर्ड,
नई दिल्ली।

The Secretary,
Railway Board,
New Delhi.

THE RCF TEAM

Shri K.K.Saxena
General Manager

Alok Dave
CME

Kali Shankar
COS

Gurdev Singh
FA&CAO

C.L.Bharti
CPO

Dr.D.R.Bangotra
CMS

Dalbir Singh
CE

S.K.Agarwal
CEE

Rajiv Chandra
CME/IT

R.S.Kochak
CDE

Dinesh Kumar
CPM

S.K.Agarwal
CPLE

Virender Kumar
CWE/Shell

D.S.Jangpangi
CMM/HSQ

P.C.Sharma
CMM/TKJ

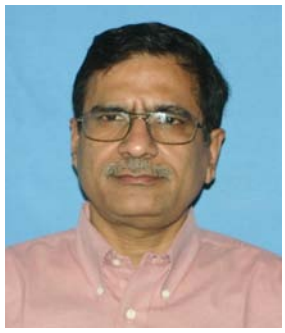
R.K.Mehta
CE/TKJ

Devendra Kumar
CPE

G.S.Hira
FA&CAO/Project

S.S.Kalsi
CWE/Furn.

Birendra Muduia
CQM

P.K.Sanghi
CESE

Rattan Lal
CEDE

Rajnish Bansal
Secy. to GM

D.R.Meena
Sr.Commandant

रेल कोच फैक्टरी, कपूरथला

Rail Coach Factory, Kapurthala

S.No.	Contents	Page	विषय सूची	पृष्ठ
1	Important Statistics	7		
2	General Administration	8	सामान्य प्रशासन	1
3	Public Relations & Publicity	10	जनसम्पर्क एवं प्रचार	4
4	Mechanical	12	यांत्रिक	6
5	Electrical	22	विद्युत	15
6	Electrical Services	23	विद्युत सेवाएं	17
7	Stores	25	भंडार	19
8	Accounts	28	लेखा	23
9	Civil Engineering	48	सिविल इंजीनियरिंग	38
10	Personnel	52	कार्मिक	42
11	Medical	59	चिकित्सा	49
12	Vigilance	64	सतर्कता	55
13	Security	65	सुरक्षा	56
14	Sports	66	खेल-कूद	58

IMPORTANT STATISTICS

1.		Laying of Foundation Stone of RCF Complex	17.08.1985
2.		Production commenced	19.09.1987
3.		First Coach turned-out	31.03.1988
4.		First AC Chair Car turned-out	11.01.1992
5.		First AC 3-tier Sleeper turned-out	06.10.1993
6.		First Garib Rath rolled-out	15.09.2006
7.		First Duronto Rake rolled-out	17.11.2009
8.		First Double Decker Rake rolled-out	16.10.2010
9.		First Day Duronto Rake rolled-out	30.03.2011
10.		Coaches Produced during 2010-11	1576 coaches
11.		Cumulative Coach Production up-to 2010-11	24140 coaches
12.		Cost of RCF Project	888.44 crores
13.		Total Area of Complex	1178 acres
	a)	Township	838 acres
	b)	Workshop including TTC	340 acres
14.		Covered Area of Workshop Structure	1.4 lac sqm
15.		No. of planted trees	1.75 lacs
16.		Hospital	60 beds
17.		Schools	05
	a)	Primary/Nursery	03
	b)	Secondary	02
18.		Community Facilities available in the Township	
	a)	Shopping Complex	
	b)	Community Cultural Centre	
	c)	Officers Club & Rest House	
	d)	Subordinate Club & Rest House	
	e)	Workers Club & Rest House	
	f)	Sports Facilities including 18 holes Golf Course, Stadium & Astroturf Hockey Ground, Swimming Pool etc.	
	g)	Post Office	
	h)	Two Banks & Five ATMs	
	i)	Kendriya Bhandar	

GENERAL ADMINSTRATION

1.0 GENERAL

We are fortunate to be part of this exciting time horizon, when Indian economy is growing at a fast pace. Buoyancy of transport sector is directly linked with the growth in economy and same phenomenon is visible on Indian Railways. Going by the trend, passenger traffic on IR has shown a significant growth of more than 6% in the period till March,2011 compared to the last year. As a result, pressure for increasing the passenger carrying capacity on the system is mounting day by day. To cater to this fast growing demand, Railway Board have envisaged many new projects to augment the capacity for manufacturing of rolling stock, but most of the projects are yet to take a shape. In this situation, it becomes imperative for the existing production units to meet the demand by exploiting their resources to the fullest extent.

Rail Coach Factory, Kapurthala, being the premier coach manufacturing unit of Indian Railways, has taken the lead and met the challenges set for it by the Railway Board. RCF has not only achieved newer heights in production volumes but it has also developed new products that can transform the way, people travel on the Indian Railways. It has come out with innovative and technologically sophisticated solutions that will have a far reaching impact on the deliverance standards of Indian Railways.

Since its inception in 1988, RCF has more than lived upto its expectations, and more than half of the passenger carriages being used by IR have been produced at RCF. For bringing international travel experience to the Indian populace, it started producing world class stainless steel coaches, few years back. These coaches have higher speed potential (up to 180 kmph), higher carrying capacity, aesthetically pleasing looks and above all superior safety features built into its design. Though, with selective indigenization, the costs of these coaches have been brought down to one third of their original cost, but still these are 50 to 80% costlier than the conventional coaches. Due to higher cost, these coaches were hitherto confined to only premium trains like Rajdhani and Shatabdi Express. So till 2009, RCF was manufacturing around 100 such coaches every year. But, to derive the benefits of this superior technology on a wider scale, a decision was taken in 2009-10 to completely switch over to stainless steel coach manufacturing.

To cut-down the cost, initially hybrid coaches were developed by RCF in which stainless steel shells were used with conventional ICF bogies. After producing 410 coaches, it was finally decided by Railway Board to stop the production of these hybrids, because the superior safety features of high speed FIAT bogie were not being exploited in this *avatar*. So RCF stopped producing the hybrids in the middle of 2010-11 and now only true technology version is being produced. Production of this design is demanding by any standards, but RCF made a quantum jump in increasing the production of stainless steel coaches to 458 coaches in 2010-11. This is all the more significant because it is being achieved together with the highest ever overall production of 1576 coaches during the year.

With ever increasing expectations from RCF, Railway Board threw up an another challenge on it, when Hon'ble Minister for Railways Ms. Mamta Banerjee announced a dream project of developing an air-conditioned double decker coach in the Rail Budget-2009. RCF along with RDSO took up the challenge and came out with a surprise when the prototype of a world class air-conditioned double decker coach was unveiled at New Delhi on 31-Mar-2010, making the dream a reality in just 9 months from its conceiving. After successful oscillation trials, the first rake of double-deckers was turned out in October-2010 to run between Howrah and Dhanbad.

The new air-conditioned double decker coaches have many superior technical features like stronger and lighter stainless steel body, high speed Y-Frame bogies with pneumatic suspension for superior ride quality, crash worthy shell design and many other safety related features. The chairs have been provided in a face to face format, so that passengers can enjoy traveling with their families. For better safety, fire retardant upholstery has been used in these chairs. These coaches have aesthetically pleasing interiors with FRP panelling, aluminium extruded luggage racks with toughened glass panels and many new features like, modular lavatories with controlled discharge taps.

GPS based electronic passenger information system, LED based programmable destination boards, automatic sliding doors (with press of a button) and Reverse Osmosis based water purification system have also been provided in each coach as further value additions.

Due to higher height and also use of space at platform level, some MMD issues cropped up, but now most of these issues have been resolved by intervention of RDSO and Railway Board. The clearance from Commissioner of Railway Safety is expected shortly as most of the validation trials have been completed successfully.

RCF also produced all the coaches required for Duronto train services, which have been furnished with high end interiors and eye catching vinyl wraps on their exteriors. Paintless stainless steel coaches with nano-coating were turned out on experimental

basis, which may change the look of the coaches besides reducing the maintenance effort and cost.
RCF also developed bio-digesters based on DRDE technology and first rake fitted with these digesters has been pressed into service in Jan'2011. These are zero-discharge toilets and uses bacteria to de-compose the waste. The field performance results will help in deciding further course of action.

To eliminate the problem of jerks in stainless steel coaches, new design of couplers has been developed in association with M/s Dellner of Sweden. First rake fitted with these couplers has already been turned out to run between Secunderabad and Mumbai. The new design is likely to eliminate this problem to a great extent.

Capacity expansion projects from 1000 to 1500 coaches per annum are almost complete, a consolidation phase has set in now at RCF, where the newly created assets are being integrated with the existing infrastructure. This will help RCF in increasing the production, especially that of stainless steel coaches.

Requirements of Indian Railways are of prime concern to RCF, but to remain abreast with the latest technological developments and to have an international exposure, it is simultaneously making forays into export market. Small orders for MG coaching stock are currently being executed to the developing African nations through RITES. Recently Bangladesh has also evinced interest in sourcing their rolling stock from RCF.

Maintaining its lead in Information Technology, RCF introduced many new vistas in lean and efficient management through a full blown LAN which connects each and every technical section besides providing full automation of the office working with every non-technical employee having access through LAN connected PC. E-procurement has totally set in and brought out efficiency and total transparency in the store procurement systems.

Safety during work is given due importance in RCF under OHSAS-18000 system. In order to provide an efficient and safe working environment, it has gone for 5-S certification which is Japanese concept to improve productivity with work place management techniques. Regular audits are conducted to maintain the standards.

With it commitment towards a comprehensive social development, RCF has broadened the horizons with significant achievements in various sports and cultural activities. Set in a milieu of serene surroundings with world class sports infra-structure, it's committed and well trained sportspersons, of international calibre. During 2010-11, 4 women players from RCF represented India in Commonwealth and Asian Games. Continuing with its traditions, it retained the top spots in many cultural activities too. RCF also developed a new Railway Heritage Park in order to preserve the rich heritage of rolling stock owned by Indian Railways. Coaches of different gauges having heritage value have been displayed for tourist interest.

Welfare of employees and their families has never taken a back seat in the organisation. The residents of RCF township are enjoying the best civic amenities. The medical infra-structure available at Railway Hospital, RCF has become a bench marking standard for the rest of Indian Railways, and the hospital is now being frequented by medical officers from various zones for replicating the systems elsewhere.
RCF Women Welfare Organisation, Scouts and Guides and the newly set-up St. John Ambulance Brigade together remained proactive in reaching the needy people, stuck in the natural calamities like floods and they were helped with medicines, food and clothes.

Environment protection and conservation of resources remained a priority for RCF. The wide-ranging efforts made by RCF towards sustainable development were given due recognition by independent agencies. In the recent past, it had been honoured by World Environment Foundation with prestigious Golden Peacock Award for Environment Management and also by an equally coveted Greentech Environment Excellence Award. These recognitions make RCF even more responsive to the global challenge and the resolve to reduce its carbon footprint is now enshrined in the management policy certified under ISO-14000 regime.

Not resting on its laurels, the organisation is determined for stretching the envelope to the next level by optimal use of its resources and efficient deployment of its human capital. It will not only live up to, but surpass the expectations of its stake holders. Creating a healthy environment which promotes creativity and zeal to excel in all its employees, RCF is all set for a bright future ahead.

PUBLIC RELATIONS & PUBLICITY

1.0 CELEBRATIONS

1.1 Railway Week

RCF celebrated 55th Railway Week on 16.04.2010 with great enthusiasm. On this occasion, 122 employees & officers were awarded for their meritorious performance and sheer dedication towards work during the year 2009-10. A colourful cultural programme was organized on this occasion.

1.2 Independence Day

RCF celebrated Independence Day with great patriotic fervour and a sense of pride. Thousands of RCF employees and their family members participated in the celebrations. Children got enthused by the events like edventure motor cycle rides and various types of cultural performances. Members of RCF WWO visited railway hospital and rendered empathy to the indoor patients and distributed fruits and sweets. On this occasion, Administrative Building and lake complex were illuminated decoratingly and view was full of a festive look.

1.3 Republic Day

RCF celebrated the Republic Day with great patriotic fervour and zeal. Thousands of RCF employees and their family members gathered for the function. Children enjoyed adventure sport events and dog show besides various dance performances presented by schools. On this occasion, members of RCF WWO visited RCF hospital and distributed fruits and gifts to the indoor patients.

2.0 VISITS

2.1 Member Mechanical visited RCF

Member Mechanical, Railway Board , Shri Sanjiv Handa visited RCF on 26th-27th May,2010. Member Mechanical inaugurated a new Paint Shop & expansion bays of Furnishing Shop constructed to augment the infrastructure for manufacturing 1500 coaches per annum. Member Mechanical inaugurated the series production of air-conditioned double decker coaches at RCF on 27th May,2011. He exhorted RCF personnel to gear-up for early switch over to LHB type stainless steel coaches which display superior safety performance and minimize casualties in case of accidents as demonstrated in two recent Rajdhani derailments.

2.2 Bangladesh Railway Delegation visited RCF

A high level team from Bangladesh visited RCF on 4th Sept,2010 in their search for low cost solutions to their rail travel service service requirements. Team took a round of the workshop and showed keen interest in the manufacturing capabilities of RCF. They were apprised about the design aspects and growing experience of RCF in stainless steel coaches. The delegation carried a highly positive outlook back to their country.

In their hunt for low cost solution to their rail service requirements, a delegation from Bangladesh again visited RCF on 12th January .The team took a round of the workshop and showed keen interest in the manufacturing capabilities of RCF. They were apprised about the design aspects , and growing experience of RCF in stainless steel coaches. The delegation carried a highly positive outlook back to their country.

2.3 Czech Republic Delegation visits RCF

Deputy Minister for Transport, Czech Republic, Mr. IVO Vykydal along with Ambassador of Czech Republic in India, Mr. Miloslav Stasek visited RCF on 27th Oct, 2010. They were accompanied by high level business delegation which was exploring business opportunities with Indian Railways. While appreciating the infrastructure and technology available with RCF, delegation showed keen interest in supplying various items to Indian Railways which are currently being procured through global tenders.

3.0 EXHIBITIONS

3.1 Participation In CII Steel Mart-2010

RCF participated in two day exposition CII Steel Mart-2010 at Chandigarh from 10th Sept, 2010 to 11th Sept, 2010. The conference on the theme "Emerging Opportunities & Challenges controlling steel industry" was presided by Hon'ble Minister of Steel Shri Virbhadra Singh. RCF's General Manager Shri Pardeep Kumar delivered a presentation on " Demand of Stainless Steel on Indian Railways". In the coinciding exposition, RCF's stall got overwhelming response.

Shri Virbhadra Singh, Union Minister of Micro, Small and Medium Enterprises Interacting with Shri Pradeep Kumar, General Manager,RCF in IITF-2010

3.2 RCF Participated In IITF-2010

RCF participated in India International Trade Fair held at Pragati Maidan, New Delhi from 14-27th Nov, 2010. RCF exhibited nicely in this exhibition and model of Double Decker was a point of attraction for visitors. Thousands of visitors

thronged the IR Exhibition Block to have a glimpse of latest development done by Indian Railways.

4.0 PUBLICITY

All new developments and activities were publicized and highlighted through publication and distribution of Quarterly News Bulletin called RCF Newsletter. Photographs of different products and publicity data were displayed through Flex Display Boards at different locations in RCF. To disseminate the information amongst RCF employees , one page In-house publication ' RCF Samachar' was published and when need arose. On the occasion of Rolling out of LHB AC Double Decker rake, a multi-colour publicity brochure was brought out.

All ceremonial functions, important rake roll out events, new developments, sports events were given due coverage by electronic and print media in their esteemed newspapers and TV channels.

Mode of Publicity	**2010-11**	**2009-10**
No. of Press Releases Issued	17	16
No.of Insertions (Press Release)	96	156
No. of Display Banners Prepared	25	03

5.0 CLASSIFIED ADVERTISEMENTS

Tender Notice Advertisements were issued regularly during the financial year 2010-11. The contents were regularly scrutinized for space wastage and editing of matter to be published before releasing to various newspapers.

	2010-11			2009-10		
	English	Vernaculars	Total	English	Vernaculars	Total
No. of Tender Notices Published	169	169	169	130	130	130
No. of Insertions	672	440	1112	608	355	963
Expenses Incurred (Rs.)	8016917	2151868	10168785	7738000	2097000	9835000

6.0 ASSISTANCE TO CITIZENS THROUGH RTI ACT, 2005

The Right to Information Act 2005 provides for setting out the practical regime of right to information for citizens to secure access to information under the control of public authorities in order to promote transparency and accountability in the working of public authority. Constitution of India has established a democratic Republic and democracy requires an informed citizenry and transparency of information which are vital to its functioning. RCF expedited to provide certain information to citizens of India who desired it.

Parameter	2010-11	2009-10
Total number of Applications Received	469	232
Total number of Applications Disposed –off	418	196
Total number of CIC Cases received	5	4
No. of cases where CIC penalized RCF Officer	Nil	Nil

Shri Sanjiv Handa, Member Mechanical, Railway Board visiting RCF workshops

Different Publications during the year

MECHANICAL

1.0 GENERAL

The foundation stone of Rail Coach Factory, Kapurthala, was laid by Late Rajiv Gandhi, the then Prime Minister of India, on 17th August, 1985. Production commenced in a record time of two years and the first coach was turned out in March 1988. From its humble beginning, the factory has gone from strength to strength and has so far manufactured more than 24000 coaches of more than 35 AC and non AC design variants which are more than 50% of the total coaches running on Indian Railways.

Production of LHB type coaches was started in the year 2001-02 and up to March, 2010, 1076 LHB + 411 SS Hybrid design coaches have been manufactured. Most of these coaches are running in prestigious Rajdhani, Shatabdi and Duronto Express Trains and giving immense passenger satisfaction.

During 2010-11, RCF achieved a record production of 1576 coaches. This is highest ever production achieved since its inception. There was also a quantum jump in production of SS coaches over last year's production.

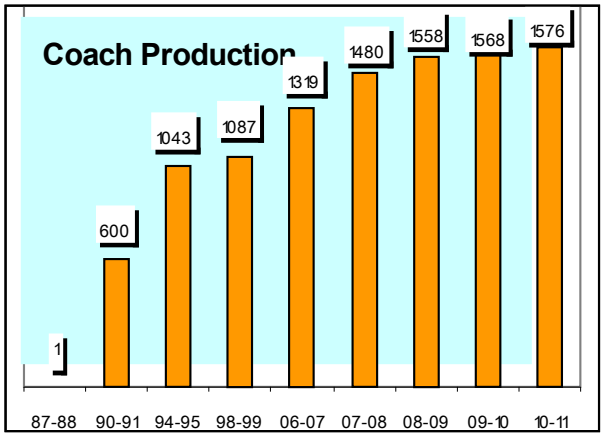

Highest ever production of 1576 coaches in 2010- 11

COACH PRODUCTION DURING 2010-11		
AC(Conventional)	190	12.1%
LHB	316	20.1%
Hybrid	140	8.9%
Exports & others	18	1.1%
Non AC	912	57.9%
Total	1576	

PRODUCTION PROGRAMME FOR 2011-12		
AC(Conventional)	231	14.44%
AC (LHB)	310	19.38%
Non AC (LHB)	116	7.25%
Exports	16	1.00%
Non AC & others	927	57.93%
Total	1600	

2.0 DESIGN AND DEVELOPMENT

2.1 Environment Friendly Green Toilets

Indian Railways are making endeavours for introducing environment friendly green toilet in passenger coaches. Ministry of Rural Development has announced a policy, which envisages total sanitation and elimination of open defecation all over the country. Green toilets aim at zero-defecation on the ground. Thus, not only making a clean sight at stations but also preventing damage to tracks by way of corrosion. Fecal matter on tracks is one of the biggest causes of corrosion. Green toilet will come as a succor from this nauseating problem.

IR and DRDE have signed an MoU for development of bacteria for Green toilets. This new toilet-technology also promises to keep up with not-so-disciplined Indian habits, separating non-degradable waste before disposal which passengers tend to flush in toilets. RCF has developed environmental friendly green toilets and turned out a rake of 23 coaches equipped with these toilets. These coaches are in service since 19th January 2011 in Bundelkhand Express running between Gwalior and Varanasi. The initial performance indicators are satisfactory. RCF will proliferate this technology over 5 more rakes in 2011-12.

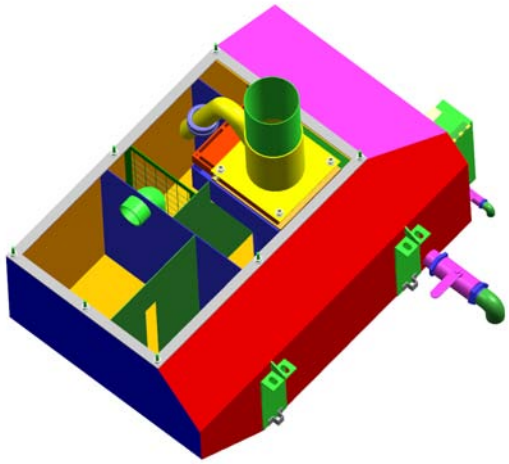
3-D View of Bio-digester tank

2.2 New Design Center Buffer Couplers in Passenger Coaches

In order to run longer trains and enhancing safety of traveling passengers and operational staff, Indian Railways has adopted AAR tight lock center buffer couplers in LHB coaches. In spite of good riding behavior and aesthetics of these coaches, jerks during run negate all the good features. Since then efforts are being made by Railways to address this problem but no significant gain was achieved. RCF in consultation with RDSO has now developed a balanced type draft gear, supplied by M/s Dellner, Sweden. RCF has turned out 15 coaches fitted with these types of couplers to SCR, on 3rd February 2011. The initial observations made by RDSO indicates that longitudinal behavior of these coaches at starting, braking, transition and normal run is almost jerk free,
thus can be endorsed as satisfactory.

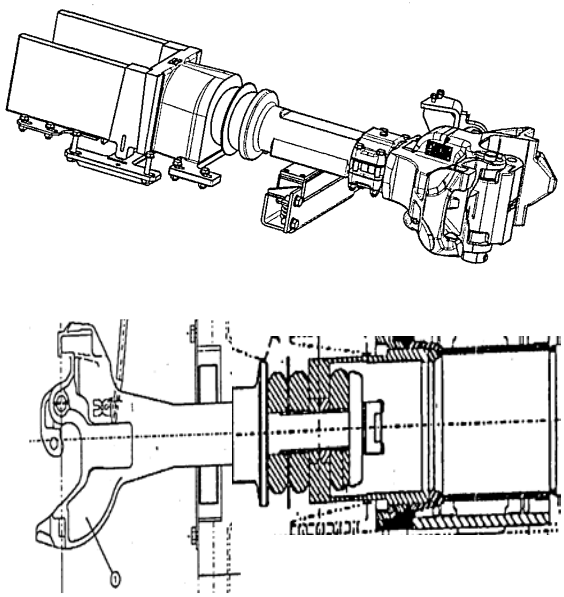

Schematic view Balanced Type Draft Gear

2.3 Stainless Steel High Speed Double Decker AC Coach

Hon'ble MR, in the Rail Budget-2009, announced introduction of Double Decker air-conditioned coaches. RCF, Kapurthala was entrusted with this challenging assignment to develop design and manufacture these caches in association with RDSO. The first prototype AC Double Decker coach was successfully developed in a record time of nine months; from the time it was first conceived. This coach has aesthetically pleasing interiors, stainless steel body, high-speed Eurofima design bogie with air springs. In this coach 128 passengers can be seated compared to 78 passengers in LHB type Shatabdi Chair Car, thus increasing the capacity by almost 70%. After oscillation trials, this coach has been given speed certificate for speeds up to 160 kmph. RCF has turned out eight such coaches in Oct'2010, which are intended to run in ER after CRS clearances are obtained. After initial feedback during trial runs, now this coach has been redesigned with reduced width of 3050mm (earlier 3135mm). It has more passenger friendly seating layout with a Seating capacity of 120. RCF will turn out 30 double decker coaches in the year 2011-12.

Stainless Steel High Speed AC Double Decker Coach

Seats Arrangement in Double Decker Coach

Stair Case area with handrails

2.4 Export of MG DEMU for PTB, Senegal

PTB Senegal, through RITES, has placed an order for four MG DEMUs with two air-conditioned driving power cars and two trailer cars each. MG air-conditioned DPC has been designed and manufactured for the first time by RCF. DPC has 38 seats whereas trailing car has 58 seats. As per customer specified requirements, snack bars have been provided in DPCs. Trailing cars have one toilet each for catering to day only services.

Exterior View of Memo TC Coach

Interior View of Memo TC Coach

Cushioned Chairs of DPC

2.5 Non AC Variants of LHB EOG Coaches

Presently LHB coaches are being run only in premium air-conditioned services such as Rajdhani, Shatabdi and Duronto trains owing to high cost of manufacture. To provide the comfort and safety of these modern coaches in low cost travel, now non-AC variants such as second class sleeper, general second class and non-AC char car for Duronto trains have been developed. While Duronto rake with Non-AC chair cars having seating capacity of 106 seats has already been turned out of RCF and dispatched to Northern Railway, other non-AC variants like LHB EOG General second classes and Sleeper coaches will be turned out in the year 2011-12.

2.6 Automatic Sliding Doors on Coaches

In order to provide better and modern amenitie to passengers, RCF has achieved another milestone by introduction of automatic sliding doors on coaches. In the five double decker coaches under manufacture at RCF, automatic sliding doors have been provided in lieu of manual doors. Following are the salient features of these doors:

a) Opening is actuated through opening handle. Only a slight push of handle is required to initiate auto opening movement of the door.
b) Door closes automatically after a time delay of 3 to 5 seconds.
c) Sensors have been provided to detect any obstruction while closing and causing the door to retract to open position.
d) In case of failure of pneumatic and electrical power supply, door operation switches to manual mode.
e) On curvatures, door does not open against centrifugal forces.

2.7 Air Suspension for Improved Ride

RCF have introduced air suspension in secondary suspension of FIAT design bogies. These bogies have been used on Double Deckers turned out during the year and also on stainless steel AC 3 Tier coaches.

The spring consists of an air bellow fitted between two plates. The rubber bellow is fed with air from the feed pipe of air brake system. Air pressure creates an air gap between the plates which provides cushioning. The air pressure inside the air bellows varies based on load and ride conditions so as to provide a variable stiffness. The height of the air-spring remains constant over a wide loading spectrum. As a result, coaches fitted with air suspension provide a smoother ride as compared to steel springs.

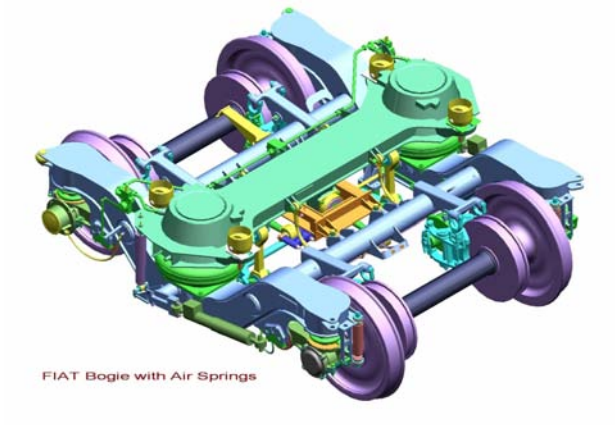
FIAT Bogie with Air Springs

3.0 PLANT MAINTENANCE

3.1 Assets

CNC Machines	:	74
Non CNC Machines	:	211
CO2 Welding Sets	:	436
Arc Welding Sets	:	150

Availability of Vital Assets 2010-11

Machinery & Plant

CNC Machines	:	96.27%
Non CNC machines	:	98.27%
Welding Sets	:	98.07%

Material Handling Equipment

EOT Cranes	:	99.80%
Traversors	:	98.22%

Transport Shop

Fork Lifters	:	98. 08%
Consumption of LPG	:	98812 Kg.
Consumption of CO2	:	843630 Kg.

4.0 FUND UTILISATION UNDER PH- 4100 (2010-11)

(Figures in Crores of Rs.)

Pink Book no.	Description	Outlay 2010-11	Funds allotted in FM	Expenditure during 10-11	%age utilization w.r.t. funds allotted in FM
22.3.2	M&P under CAP	1051	319	281	88.09
22.3.2	M&P under DRF	1089	548	524	95.62
TOTAL		**2104**	**867**	**805**	**92.85**

5.0 ACHIEVEMENTS- *Major in-house repairs*

5.1 LVD Laser Cutting Machine (II)

A major accident occurred on machine causing damage to X-axis drive assly. Damaged parts were repaired successfully within 48 hours and machine was handed over to production department.

5.2 Garnet Blasting Machine

There was a frequent problem of disengagement of 33 meter long blasting hose from rollers of Robot-I. The problem was analyzed critically. Special type of spacers were designed and fitted along with rollers to have perfect alignment of all the rollers. As a result of this the problem was completely solved.

5.3 Laser Bystronic Machine

CNC Laser Bystronic machine came under breakdown on 21.05.10 due to jamming of blower. The repair of this blower was not feasible and no spare blower was available. Finally, the blower of CNC LPP machine, which was out-of-use, was identified and used as replacement. Although the flow rate, H.P., frequency and rpm of this blower was different from the original mounted on Bystronic machine. Team took the initiative and fixed the blower of CNC LPP machine on CNC Laser Bystronic machine. The blower of LPP machine is running successfully at 50 Hz frequency with desired output comparable with the original blower. This helped in saving Rs. 22 lakhs, besides unavoidable long breakdown of the machine.

Laser Bystronic Cutting Machine

Underwater Plasma Cutting Machine (SUAG)

5.4 Underwater Plasma Cutting Machine (SUAG)

Chiller unit of machine was defective. No pump was available. A three plunger pump has been modified (repaired) to suit the chiller unit and it is now functioning satisfactorily.

5.5 Commissioning of new CNC Shearing Machine

A new sheet rotating device and heavy duty ball transfer assemblies was designed & manufactured in-house for commissioning of CNC Shearing machine- 16x4000. This was done so that feeding of sheets for cutting can be made feasible.

CNC Shearing Machine 16X4000 mm.

Sheet Rotating Device

5.6 Laser Cutting & Welding Machine (Balliu)

Adaptor of cutting head of the machine got damaged in an accident on date 28/06/10. The spares were not available. It was indigenously developed in MW Shop of RCF & commissioned

successfully on machine in a day's time. The performance is as good as the original.

Damaged Adopter of Cutting Head

Indigenously Developed Adopter of Cutting Head in Mill Wright Shop

6.0 FOREIGN EXCHANGE SAVINGS

The foreign exchange savings on account of in-house repair of PCB's of various CNC and Non-CNC machines from April, 2010 to March, 2011 has been assessed at **Rs.1,64,50,800**/-.

7.0 QUAILTY

7.1 Quality Assurance in Production Shops

Under ISO-9001 regime, a solid foundation for quality assurance of the products has been laid down by proper process control through working instructions, self inspections, regular calibration of jigs, fixtures and gauges besides training of staff and effective maintenance of machinery and plant.

Quality Control staff undertake inspections during coach manufacturing only at the nominated check points like final clearance of shell, bogie, painted shell and furnished coaches. Few other intermediate stages have also been incorporated in quality assurance system. At all the other stages, the concept of self inspection by production staff is practised, wherein after completion of the stage work, production staff carry out inspection of the work done and record results on a Self Inspection Performa (SIP). SIPs are available for each stage of manufacturing for all types of coaches (barring only prototypes).

The Quality Control section, however, carries out audit checks on the self inspected stages to ensure that self inspection is being effectively carried out. Suitable corrective action is initiated, wherever considered necessary. To reinforce quality of coaches Quality Wing staff developed following gauges;

Hole matching of I.V. coupler fittings of MEMUs

1. Gap gauge for easy placement of water tanks in hybrid coaches
2. Gauge for diagonal checking of LHB hatch doors
3. Gauge for checking door grazing of MEMUs
4. Gauge for checking lavatory size for easy fitment of SS inlay
5. Distance gauge for checking position of longitudinal upper berth in SSCN hybrid coaches
6. Gauge for checking compartment cabin width of SSCN hybrid coaches

In addition to above, to arrest roof leakages in LHB shells special efforts were made by introducing dye penetration test for complete checking of roof welded joints to reduce rework during shower testing. Major efforts of Quality Department are directed towards ensuring effective implementation of the laid down Quality Systems.

7.2 Metrology Laboratory

All jigs & fixtures, templates & measuring equipment are calibrated periodically to specified Standards by Metrology lab, Electronic lab and MH section of Plant Wing. During the year 2010-11, Metrology lab carried out calibration of 155 jigs & fixtures (including 111 LHB jigs), 890 measuring instruments & 916 insp. equipment & gauges. Frequent calibration assistance was also given to other Railway units. 208 equipments of other Railways were also calibrated. A total of Rs. 1,60,182/- approx) was received as test charges during this year from other Railways.

7.3 Quality Assurance of Bought Out Items

Critical items are being bought only from approved sources. Sources of critical/ safety items are approved as per laid down procedure based on the suppliers past performance in terms of delivery and quality. All purchase data is available on our Mainframe and suitable software has been developed for calculation of vendor rating. For all other items also, vendor rating is taken as a guidelines during placement of orders.

For all critical items, quality assurance plans have been drawn out and given to suppliers and inspecting agencies. Vendors are counseled from time to time for improvement in their products. Process audit at vendors premises are also being conducted for improving quality of the end product.

Vendors are also being encouraged to adopt ISO-9000 certification for their factories. Guidance and assistance in this regard are extended to the vendors, whenever required. So far, more than 330 RCF vendors have obtained ISO-9001 Certification. Most of the bought out items are received after RITES inspection. Regular interactions take place with RITES in connection with the quality of bought-outs.

Our M&C Lab. is a full-fledged NABL accredited lab, with facilities for mechanical testing, chemical testing, microstructure analysis, testing of paints, radiography, testing of rubbers and plastics, gases and environmental testing. Inspection is carried out by highly educated and qualified staff. A total of Rs. 5,82,106/- (approx) were received as test charges during this year for third party testing. RITES inspectors frequently use our lab for their inspection work. 3629 items including 1258 LHB items were inspected by M&C lab in 2010-11.

7.4 Customer Service Cell

Each of our coaches is accompanied by a Warranty Certificate valid for 24 months. In addition, RCF also has an active 'Customer Service Cell' to maintain close liaison with the Zonal Railways. They can lodge coach related complaints/ warranty claims at RCF website, www.rcf.indianrailways.gov.in. Railways are encouraged to report even minor warranty claims and prompt action is taken.

Staff from Customer Service Cell goes to Zonal Railways as per fixed programme to collect feedback about RCF coaches. The feedback received through these visits or received directly from Zonal Railways is analyzed in details and corrective/preventive actions are taken promptly.

Summary of Customer Complaints

Equipment	2009-10	2010-11
DV	11	15
AIR SPRING	-	09
BRAKE CYLINDER	-	06
DISC BRAKE	-	02
DAMPERS	04	12
BEARINGS	04	06
BOGIE FRAME	01	-
CDTS	09	38
DOORS	04	-
WATER TANK	06	04
SEATS & BERTH	01	05
CBC	01	06
BUFFER	04	09
MISC.	21	29
TOTAL	**66**	**141**

8.0 SYSTEM IMPROVEMENTS

8.1 '5S' Certification

RCF created history on 24.07.2008 by acquiring '5S' certificate from Quality Circle Forum of India(QCFI) – a premier '5S' Certification body in India, RCF is the first unit in Indian Railways to acquire '5S' Certification. Third & Fourth Surveillance audit was conducted by M/s QCFI on 22-25 Apr'2010 & 22-25 Nov'2010.

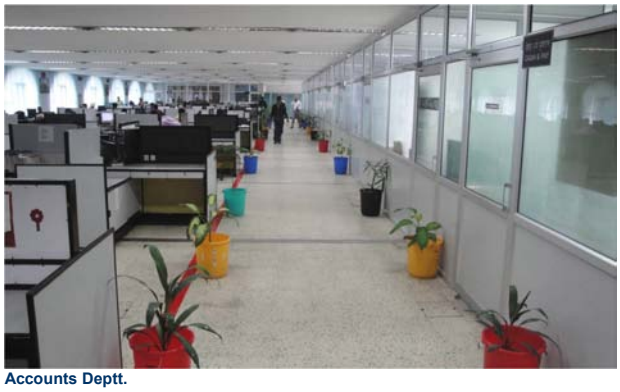

Accounts Deptt.

Sheet Metal Shop

8.2 Formation of Quality Circles

Thirty nine quality circles have been formed in the various departments/shops/sections of RCF for mutually solving their work related problems. Some quality circles are performing extremely well in solving day to day shop problems related to their job. One Quality Circle "Samanta" participated in

Glimpses of NCQC2010 at Vishakhapatnam

National Convention for Quality Circles, organized by QCFI Hyderabad at Vishakhapatnam in Dec 2010. This Quality Circle was adjudged 'excellent' in this convention. Samanta quality circle presented case study on reduction of scrap by better management and planning of components from sheet metal shop of fabrication section.

These Quality Circles are run by people working at bottom of the hierarchical pyramid which include technicians. Quality Circles benefit both, the management and the workforce.

8.3 Integrated Management System (IMS)

RCF has been an ISO-9001 certificate holder since 1995. In July 1999, RCF became the first

organization in the country to be awarded ISO-14001 certification, for workshop as well as its residential complex.In July 2009, RCF became the first unit in the Indian Railways to obtain Integrated Management System (IMS) certification, encompassing ISO:9001:2008, ISO:14001:2004& OHSAS :18001:2007,valid till Jul'12. 1st surveillance audit was conducted in May'2010 by M/s DNV, Mumbai recommending continuation of the certification.

8.4 NABL Certification

RCF received NABL Certification for Metallurgical & Chemical Laboratory (Spectro) on 02.12.2008 and for Calibration Laboratory (Mechanical) on 11.02.2009. Recertification audit was conducted by certifying body on 10th &11th Feb'11 for both these Labs. The current certification is valid till 23/3/2013.

9.0 PROJECT DEPARTMENT

9.1 Wheel Shop Project

The contract for Wheel Shop project was awarded to IRCON on turn key basis to manufacture various types of wheel-sets so that dependence on other ZR workshops can be reduced while saving cost incurred on transportation of wheel sets. All the Civil and Electrical works have been completed. Commissioning of M&P items has been done and proving out is in progress.

9.2 Enhancement of Coach Production Capacity from 1000 to 1400 coaches per annum

This contract was also awarded to IRCON on turn key basis. This project includes additional bays in

Wheel Shop

Sheet Metal Shop, Shell Assembly Shop, Furnishing Shop, setting up of New Paint Shop and additional storage facilities. The physical progress of work is 97 %. All the new bays /shops have been handed over to concerned shops for production. This project is at closing stage.

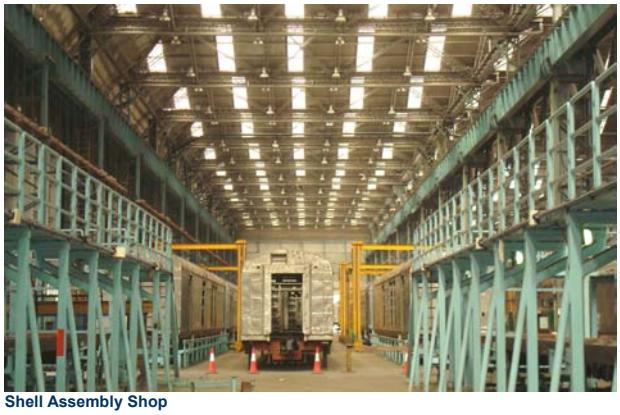

Shell Assembly Shop

Bogie Shop

9.3 Switchover to LHB Stainless Steel Coach Production and Enhancement of Capacity from 1400 To 1500 coaches per annum

This contract has been awarded to RITES on turn key basis. All the M&P, Civil, Electrical works have been completed. The physical progress of work is 97%. This project is at the closing stage.

9.4 Bogie Frame Factory at Budge-Budge

This project is a material modification of the earlier sanctioned project "Switchover to LHB Stainless Steel Coaches Production and Enhancement of Capacity from 1400 to 1500 coaches per annum". The project is also being executed by RITES on turn key basis. Work of land development and boundary wall has commenced on 13.05.11.

9.5 Switchover to LHB SS Coach Production and Enhancement of Capacity from 1400 to 1500 coaches per annum – Phase-II

Railway Board has sanctioned this project as a new work in Pink Book 2011-12 at an estimated cost of Rs. 130.24 Crore. The main objective of the project is to finish remnant works on the road to cent percent switchover to stainless steel coach production. Detailed estimates have been prepared and sent to Railway board for sanction.

The sanctioned cost and revised estimate of all projects are as under :

SNo	Project	Sanction Cost	Revised Estimated Cost	Status of Completion
1	Wheel shop project	68.29 Cr	65.24 Cr	At closing stage
2	Enhancement of coach production capacity from 1000 to 1400 coaches per annum	74.97 Cr	98.36 Cr	At closing stage
3 A	Switchover to LHB SS coach production and enhancement of capacity from 1400 to 1500 coaches per annum	37.97 Cr	55.66 Cr	At closing stage
3 B	Bogie frame manufacturing factory at Budge-Budge	59.3 Cr	59.3 Cr	Initial stage
4	Switchover to LHB stainless steel coach production and enhancement of capacity from 1400 to 1500 coaches per annum – phase-II	130.24 Cr	130.24 Cr	Initial stage

10.0 TECHNICAL TRAINING CENTER

Technical Training Centre (TTC) was established in the year 1987. One Regional Welding Training Institute (RWTI) is functioning in the same campus. RWTI caters to the need of NWR, NR, DMW and RCF.

10.1 Training Courses for Group C & D employees

Induction course, Promotional course, Refresher course, Pre-selection training, Act Apprentices course and special courses are organized in TTC periodically.

10.2 Extra Curricular Activities

Cultural programmes on the occasion of Lohri, Holi, Baisakhi etc. are being organized regularly in TTC multipurpose hall. Intra-TTC Sports Meet with games such as Football, Volleyball & Badminton are also organized at regular intervals.

11.0 INFORMATION TECHNOLOGY

11.1 Development of MIS Dashboard

An MIS-Dashboard has been developed for the Top Management of RCF, to view and monitor the vital parameters of the organization in a single window on any given time. This shows Coach Production Summary, Inventory Position, Purchase Officer-wise Procurement cases under finalization, Scrap Sale Data, Belt holding critical items for Coach Production, Plan-Head wise expenditure extracted from various Applications like - MMIS, SDS, CMMS, EICS and FACT. Buttons have been provided to view summary and drill down reports. Graphical display of data of all these vital parameters has also been provided for better comprehension. This facilitates monitoring of production, material availability and inventory control in an effective manner.

11.2 Module for Generation of I-Cards

For employees

The process for generation and issue of I-Cards for RCF employees has been fully computerized. All the activities like application preparation, verification, authentication and printing of new ID–Cards is being done on-line now with the help of the new module.

For family members

Further, similar facility to generate I-Cards for family members of RCF employees residing with them in the township has also been provided in SEE Application. This eases up the work of preparation of family Identity cards (I-cards) for all the family members/dependents of RCF employees. The system fetches information from PINS database and fills-up relevant columns in the Family I-Card. The Module provides for an employee to himself print the filled-up I-Cards of his/her family members and submit it to I-Card section after pasting the photograph and putting the signature of family member at relevant position.

The above two functionalities dramatically ease-up/speed-up manual task of preparing I-Cards and minimize the cost.

11.3 Implementation of Revised Pass Rules in PINS Application

Following revision in travel entitlement by Railway Board, Pass Module of PINS Application has been suitably modified to facilitate grant and issuance of passes as per the revised provisions. Further, for the first time in Indian Railways, the *pass class entitlement* for privilege & duty has been differentiated for certain category of staff. A new **pass class**, referred as 'IIA' (**Yellow Pass**), has been introduced. Subtle nuances introduced as per revised provisions for grant and issuance of passes had to be built, using some intricate programming logic.

11.4 Standardization of RCF Website

As per Railway Board's directives, all Indian Railways' websites were required to be standardized as per the template designed by CRIS, New Delhi. Further, it was required that railway organizations migrate their website on to a new JAVA based platform that is supposed to be more secure and user friendly compared to earlier platforms. Accordingly, necessary changes/migration efforts have been undertaken and the site has been suitably modified/ migrated onto the new platform. In the process, the website has also been made more robust, user-friendly and aesthetic pleasing. With this, the URL of the RCF

Website has also been changed from 'rcfkapurthala.com' to 'rcf.indianrailways.gov.in', following the naming convention suggested by the Railway Board. Further, in consonance with the guidelines issued by the Central Vigilance Commission (CVC), the Hindi/Rajbhasha version of the RCF website had already been suitably augmented. Training has, subsequently, been imparted to more than 40 users of RCF Website, for using the new features.

11.5 Computerization of Night Duty Roster

The Night duty roster of officers for workshop duty was earlier being prepared manually consuming a lot of manual effort. The whole task has now been computerized and the monthly night duty roster is being prepared automatically. After generation of the roster, appropriate SMSs are sent automatically to concerned officers. Reminder is also sent on duty date to the concerned officers through s*ystem generated* **SMSs**. The complete monthly roster can now be viewed in the **SEE** Application. Further, officers performing night duty can now submit their night duty report electronically through the **SEE** Application**.** With the implementation of this module, significant savings in man-days involved in preparation/circulation of Night Duty Roster and in printing paper could be achieved every month - a welcome step towards making a *paper-less* or *less-paper* office.

11.6 Modification in DAK Module

To avoid duplication of dak dispatch and receipt entries in the Dak Module of MMIS application, a unique or primary "Dispatch Number" has been given to each letter/file of dak. With this, substantial data entry effort could be saved resulting in greater efficiency in day to day working in Dak Dispatch & Receipt Sections of all Departments in RCF.

11.7 Miscellaneous Enhancements

Apart from above developments, numerous enhancements in existing applications have been carried out during the year. Some notable ones are listed below.

11.8 Enhancements in MMIS

11.8.1 Modification in Quality Module of MMIS Application

Quality Module of MMIS Application has been enhanced to incorporate the changes as proposed in ISP 04 version 02 dated 10.08.2010 of ISO-9001 Document by Quality department. With coming up of this module, the greater efficiency will be achieved in development, registration, evaluation and Quality rating of vendors.

11.8.2 Module for releasing the scrap lot lifted partially by Scrap Vendor

A new Module has been developed for taking into account already sold but partially lifted stock by a scrap vendor during the free delivery period. The lot, thus released, is made available for re-auction, thereby increasing the revenue on re-sale of scrap.

11.8.3 Provision of automatic updating of inactive status of stock items

A new programme now automatically updates the inactive item Check-Flag on items, not issued for an year or more to prevent activities like indenting, tendering, PO Placement etc. in respect of such items.

11.8.4 Development of various MIS Reports in MMIS Application

Various MIS reports have been provided in the MMIS Application, viz**.**

- Statement of Scrap sold - Monthly & Quarterly,
- Summary of DRR and RO Generation in stipulated Time,
- Coverage as per Desired Production Plan

11.8.5 Provision of additional reports in MMIS

Following additional reports apart from the above listed MIS reports have been provided additionally:

- Summary of pending tenders (section- wise).
- Report on Production Meeting Position.
- Consecutive rejection of a trade supplied item.
- Net procurement quantity against demand of any year
- Report on uncommon items of coaches.
- Report listing PLs provided with additional report/ search options – PL No/Description/Drawing.

11.9 Enhancements in FACT

11.9.1 Enhancements in Civil Works Application

The latest Schedule of Rates–2010 (SOR-2010) have been loaded in the Civil Works Application, with the result that the estimates, tenders, agreements and other related task of Civil Department can be done by using the latest SOR-2010 as well as old SOR. The tender document can be uploaded on the RCF website accordingly for the information of contractors.

11.9.2 Module for Withdrawal of Money from Provident Fund A/c

A new module has been developed for the withdrawal of money from Provident Fund account by the staff. The module provides all the required information in an on-line **Single Page Form**, while the manually filled form hither to used ran into five pages and is required to be submitted in two copies (Total 10 pages). Therefore, by resorting to this facility, not only time and efforts required to fill the form will be saved, but there would also be an 80% saving in the stationery.

Apart from above, a new Module providing Information on **contribution to PF made under the New Pension Scheme** has also been developed. A link has also been provided in the '***RCFInternal'*** website where one can view this information as available on the National Securities Depository Limited website (https://www.cra-nsdl.com/CRA/).

11.10 Enhancements in PINS/SEE

11.10.1 Computerization of Officers' Club recoveries

A new module has been developed to computerize the break-up of club recoveries for Officers' Club. This module enables an officer to view the break-up of club recoveries, such as deductions done under membership charges, diet & other charges for each club evening, swimming pool charges, hobby classes charges etc. It reduces the data entry work

to a large extent by requiring one time entry in respect of most items of deduction.

12.0 SAFETY

Industrial Safety Management aims at minimizing the chances of risks, injuries and accidents by implementing risk management techniques and safety management operations, improving the standard of health of the employees, monitoring the operating systems and bolstering the safety measures on the shop floor.

(i) Sustained efforts have been made at RCF to keep the safety standards very high and make the staff to accept the same and also to make these standards a part of the work culture.

(ii) Safety week was celebrated from 4th March-11 to 11th March-11 by putting safety badges to each staff & officers, taking safety pledge from Occupier.

(iii) Regular safety seminars/meetings have been organized as per schedule for creating the sustaining safety awareness amongst the staff.

(iv) Regular industrial safety awareness courses have been conducted at Technical Training Center, RCF for trainees staff, technicians staff and supervisors staff covering the following safety points:

a) General guidelines regarding safety.
b) Use of personal protective equipments at Workshop.
c) Role of supervisors in maintaining safe environment of working.
d) Common causes of accidents at RCF with special emphasis on preventive measures.
e) How to improve productivity by maintaining the safety culture at Workshop.
f) Electrical safety/ safety in welding processes.
g) Hazardous Waste Management.
h) Safety in material handlings.

(v) To ensure availability and usage of personal protective equipments and good house keeping, regular safety inspection have been carried out.

(vi) To ensure the proper disposal of hazardous wastes as per norms laid down concerned regulatory authorities, regular monitoring/co-ordination have been carried out. As per the guidelines by PPCB, 407 MT of paint Sludge have been shifted to the cement plant of M/s. Ambuja Cements Ltd. Co-processing in their cement Kiln.

(vii) Number of Safety inspections were carried out to identify the hazards & with suggestions to control the hazards.

(viii) All unsafe incidents/ Shop accidents have been investigated and analyzed with emphasis on remedial action.

(ix) These measures have further strengthened documentation and improved overall awareness on safety, health and environmental aspects amongst all our staff.

ELECTRICAL

1.0 DESIGN OF NEW COACHES

1.1 Double Decker AC coach

Specifications for all the coach electrics like Switchboard Cabinets, Feeder Junction Boxes, ZS coupling, Pantry Equipments, Light Fittings etc. were prepared and frozen. One rake of 8 coaches has already been dispatched to Eastern railway for service trial with 7 Ton RMPUs. However, on the instructions of RDSO/Railway Board service of this rake shall be commenced with 10T RMPU only owing to larger passenger capacity of this coach. 10 Ton RMPU has already been developed and dispatched to Eastern railway for replacement. Further to this specifications for Switchboard Cabinet and RMPU has been modified in accordance to latest Railway Baord approved layout with reduced width and provision of these shall be made in the Double Decker coaches planned in 2011-12

1.2 Non-AC SCN cum Pantry coach (LHB shell)

Power and Schematics, coach drawings and specification for pantry equipment for non-AC coaches were successfully finalized and coaches have been turned out for service in Duronto express. Mini Pantry contain one 230 Ltrs Deep Freezer, one 90 Ltr. Bottle Cooler, one Hot case suitable for 140 meals and 30 Ltrs Water Heater. Coach has been provided with LPG based cooking arrangement.

1.3 DEMU rakes for export to Senegal

Power and Schematics, coach drawings and specification for all equipment for DEMU rakes for export to Senegal have been successfully finalized and frozen. Special feature of these coaches is development of smaller size 25KVA inverter which would be suitable for mounting on underframe for meter gauge rolling stock. .

1.4 Design of EOG type non-AC coaches

Design of following variants of LHB type EOG non-AC coaches have been finalized :-

a. SCN
b. Non-AC chair car
c. GS

Salient features of above coaches are as under :

a) Provision of Night light in each cabin
b) Provision of four Accident Emergency lights
c) Provision of modular type uniform Switchboard Cabinet for all variants
d) Provision of electron-beam irradiated cables
e) Provision of PA system
f) Provision of mini-pantry in non-AC chair car for Jan Shatabdi

2.0 IMPROVEMENT IN DESIGN OF COACHES

2.1 Modifications in Pre-cooling circuit in SG AC coaches

As per the decision taken during 24th MSG and modification sheet issued by RDSO (RDSO/PE/MS/AC/0050-2010, Rev-0), the pre-cooling circuit has been modified by providing a rotary switch in the power panel to avoid reverse operation of scroll compressor by change in phase sequence and provide feed directly to battery charger in place of existing system of providing direct feed to AC panel.

2.2 Provision of Flap door in Switchboard Cabinet for LHB Hot Buffet car

Switchboard Cabinet is provided in the doorway area and to avoid misuse by any unauthorized person, arrangement of door has been modified with individual flap doors /covers for MCB's and other switchgears provided on the doors with push type locks.

2.3 Provision of 110V, 120AH VRLA batteries in non-AC coaches

Decision was taken in the 23rd MSG (TL&AC) meeting to use 110V, 120AH VRLA Battery in 30% of the Non-AC coaches. In this regard, RCF has successfully commissioned VRLA batteries in non-AC coaches. 18 modules of 6V each have been kept in two battery boxes (9 each). Same battery box can be used for LMLA or VRLA batteries. 30% coaches have been turned out in production year 2010-11 with this type of batteries.

2.4 Provision of High HP Motors

Earlier 167 KW traction motors were being used in MEMU coaches. However, to cater to the requirement of high acceleration with fully loaded MEMU rake, the power output of the traction motor was envisaged to be enhanced. High horse power motor of Fuji design with Power output of 205 KW was provided in one MEMU rake for performance trial over Northern Railway. The development has been regularly cut-in from 2010-11.

2.5 Standardization of Light Fittings

The existing SLR coaches are provided with filament lamp based Tail Light. Provision of LED based Tail Light as is being used in LHB type power car has been made in SLR coaches. Similarly, LHB type Passenger Alarm Coach Indication Light has been fitted successfully in GS and SLR coaches and Passenger Alarm cum Reservation Chart Light have been provided in SCN coaches. This has resulted in elimination of two lights and subsequent reduction in inventory.

2.6 Provision of Toilet in MEMU coaches

Passengers of MEMU trains were demanding Toilet facilities in these coaches for quite a long time. RCF has introduced Toilet facilities in Trailer coaches turned out from April 2010 onwards. End Wall terminal board has been integrated on one side only. These coaches are in service over Northern Railway.

ELECTRICAL SERVICES

1.0 GENERAL

Electric Power supply of 132 KV is received at Main Receiving Station (MRS) through two dedicated transmission lines running between PSEB Grid Sub-Station at Kapurthala (about 9 Km) and at Khera Mandir (about 4 Km) from Rail Coach Factory complex at Hussainpur. At MRS, 132 KV supply is further stepped down to 11 KV with the help of two power transformers of 12.5 MVA each (viz TR-I & TR-II). At any instance, supply from one of the feeder is taken and another acts as an alternate supply and stand by.

Stepped-down supply from transformers is fed to 11 KV panel at MRS. It has double bus bar arrangement (one bus bar is connected to PSEB supply and other is for DG set supply). 4 Nos. DG sets of 1000 KVA capacity are installed at MRS as backup in case of supply failure/ maintenance work of switch yard etc. at MRS.

11 KV supply is further distributed to 14 Sub-Stations through 5 Ring main systems. The Sub-Stations are numbered from Sub-Station No.1 to Sub-Station No. 12 ,14 &15 (10 nos. in Workshop and 4 nos. in Colony).At Sub-Stations, it is further stepped-down to

415 V through 750 KVA, 11 KV/415 V transformers for feeding to various Shops, RCF Colony, Administrative Building, Service Buildings, Pumps etc. through LT panels at Sub-Stations.

2.0 ENERGY STATISTICS

a)	Total connected load at RCF (Workshop – 25,467 kW) (Colony – 10,416 kW)	35,883 KW
b)	Highest maximum demand recorded during the year 2010-11	6.99 MVA
c)	Standby DG Sets capacity	4.44 MVA
d)	Units Consumed during the year 2010-11	2,70,97,250 Units
e)	Payment made to PSEB	Rs 13,39,69,280/-
f)	Average cost of electricity per unit purchased from PSPCL.	Rs 4.94/-
g)	Average power factor	0.95

3.0 ELECTRICITY CONSUMPTION

Sr. No	Description	Cumulative Energy Consumption		% Variation
		2009-10	2010-11	
1.	Workshop	1,50,06378	1,58,57,227	(+) 5.67
2.	Recoverable Units	57,93,578	86,52,757	(+) 49.35
3.	Pumps	11,31,177	14,33,563	(+) 2.67
4.	**Admn. Bldg.**			
	AC	17,67,900	12,36,242	(-) 30.07
	Lighting	3,18,522	7,75,555	(+) 143.48
	Total	20,86,422	20,11,797	(-) 3.59
5.	**Hospital**			
	AC	94,135	94,005	(-) 0.13
	Lighting	1,68,125	1,48,987	(-) 11.38
	Total	2,62,260	2,42,992	(-) 7.34
6.	*Colony Street Light*	2,82,000	2,80,000	(-) 0.70
7.	Others	4,48,769	3,72,922	(-) 16.90
8.	Total (1 to 7)	2,50,10,584	2,68,51,307	(+) 7.3
9.	Total Energy Consumed for Coach Production (8 - 2)	1,92,17,006	2,01,98,550	(+) 5.10
10.	No. of ECU Turned out	2207.3	2,453.2	(+) 11.14
11.	Energy Consumed per ECU	8706.11	8,233.55	(-) 5.40
12.	Specific Energy	11,330.84	10,945.42	(-) 3.40

4.0 ENERGY CONSERVATION MEASURES

RCF has taken several steps for energy conservation during the year as under:

i) As a part of CDM project initiated by Railway Board, 10,529 Nos. of 20 W and 14 W CFL's have been distributed in RCF quarters as a replacement of incandescent bulbs of 100 W and 60 W.

ii) Occupancy sensors are being provided for officer's chambers in Admn. Building.

iii) Total rebate of Rs.17.34 Lac has been availed in 2010-11 by maintaining Power factor above 0.95.

5.0 MAJOR ACHIEVEMENTS

- Electrification of new CAD-CAM Halls in Admn Bldg. has been completed.
- Electrification and Air-conditioning of Modern Gymnasium in Maharaja Ranjit Singh Stadium has been completed also, rewiring work of Maharaja Ranjit Singh Stadium has been completed.
- Two nos. 17 Ton and 7 Nos. 8.5 Ton split air conditioning units at Waris shah hall have been commissioned.
- Electrification of Hall, kitchen, Ladies gym hall and open shed in Worker's club has been completed.
- Electrification of newly built TT hall, Gymnasium hall and Stage area including augmentation of power supply in SBSI has been completed.
- Electrification work of 4 units of Type-III (D/S) quarters for KV-I Staff has been completed.
- Electrification work of 81 units of Type-I (D/S) quarters in West colony has been completed.
- Electrification of computer lab in KV-I has been completed.
- Six nos. old MFP's and 23 Nos. SFP's in Township area have been replaced for reliable power supply in Township area.

Illuminated Administrative Building

Inauguration of Substation no. 15 on 13th Nov,2010

STORES

1.0 GENERAL

1.1 The Stores Department of RCF encompasses two Purchase offices (TKJ and HSQ) and two stocking Depots (Shell & Furnishing) at HSQ with its headquarter at Tilak Bridge/ New Delhi. The team is headed by COS and presently consists of 23 other officers : 2 CMMs (SAG), 8 Dy. CMMs (JAG/SG), 8 SMMs (SS) and 3 AMMs (JS) along with battery of 381 staff (242 Group C and 139 Group .D).

1.2 The main objectives of this department are:

- To ensure availability of *right* material (Quality & Quantity) in *right* time at *right* place from *right* source at *right* price. It has a focus on;
- Transparency in Procurement
- Inventory management
- Material handling
- Vendor development.
- Scrap disposal

1.3 To fulfill its basic objectives, the activities carried out by department are :

- Coverage of Demands by placement of Purchase Orders
- Contract management
- Regular follow-up with suppliers for ensuring timely supply of material
- Receipt, Inspection and Accountal of incoming consignments.
- Stocking , Storage, Preservation and Custody of stores
- Issue & distribution of material
- Registration / Approval of vendors
- Continuous review of requirement to avoid situations of flood (over- stock) and drought (Out of stock)
- Introduction of new Stock items and Planning of Non-stock items (Allotment of PL Number and Decision on Cut-in point)
- Coordination with various departments of RCF (Planning, Design, Quality, Finance).
- Coordination with various units of Railways and Inspection agencies of RCF (Railway Board, ICF/RWF/RSK, Workshops of Zonal Railways, RITES/RDSO/DGS&D)
- Sale of Scrap through Public auction / tender

1.4 It handles material needs for a dynamic product mix. In-spite of frequent changes in Monthly Production plans, design changes and introduction of new variants demands generated at short-notices, Stores department was able to arrange required material in time for manufacture of various variants of coaches (especially Hybrid / Stainless steel coaches – Duronto, Double-decker) and has indirectly contributed in achievement of production of 1576 Coaches in financial year 2010-11.

2.0 PROCUREMENT

2.1 There are mainly 3 categories of items purchased in RCF.

i) **Material Schedule items**

Coach components / assemblies - the demands (Procurement memo) for which are generated by Planning Department based on QPC (quantity per coach) and Coach Production Plan.

ii) **SRM (Stock Recoupment Memo) items**

Consumable and items (other than coach components/ assemblies) of regular requirement by user / shop - the Demands of which are generated by Stores Depot, on the basis of vetted EAR (Estimated Annual Requirement) and trend of consumption.

iii) **Non-stock items**

Items of non-regular nature & adhoc requirement (Such as M& P / Spares / Furniture / Computers etc.) for which requisitions are prepared by indentors of consuming department based on their need.

2.2 Purchasing is done in consonance with the Policy of Railway Board and canons of Public Procurement, through competitive bidding obtained in tenders for achieving economy and efficiency in purchase. Local purchase is resorted to meet urgent requirement and for purchase of low value items. High value tenders are examined and evaluated by Tender Committees (consisting of 3 officers-Stores, Finance & Technical) for effectiveness & better quality of decision.

2.3 Various types of tenders are:

- AT (Advertised Tender) above Rs.10 lakhs
- LT (Limited Tender) below Rs.10 lakhs
- Single Tender : for Proprietary articles/ Urgent requirements.
- GT (Global Tender) : for imported items

AT and GT are published in leading newspapers and are also available on web-sites of RCF/IREPS. Special counter is available in Purchase Offices for sale of manual advertised tenders.

2.4 Procurement of some safety and staff amenity items (such as Safety Shoes, Helmet, Protective Clothing, Hand gloves, Respiratory masks, Safety spectacles, Leg guard, Turban etc) are being made through SPC (Spot Purchase committee) for getting timely supplies of good quality / brands. Apart from these, SPC is resorted for meeting the urgent requirements of items where it is not possible to formulate exact specification and those are readily available in market (such as Furniture , Furnishing items of Rest Houses etc.). Stores department also enters into annual Road Transport Contracts and Fabrication Contracts for manufacture / work of Coach components.

2.5 RCF have placed Purchase Orders worth Rs1619.16 Crore during 2010-11, out of which24.82% accounted for the vendors of Punjab and 37.17% for those of near-by states (Haryana,Chandigarh, HP & Delhi).

3.0 DEPOT

3.1 Stores depots of RCF are one of the most efficient depots of Indian Railways with almost all their transactions done on-line as a part of integrated material management system. Real time position of inventory is available just at

click of mouse. Modern stocking facilities (such as palletization, High-rise stackers & ASRS : Automatic Storage & Retrieval System) and necessary equipments for mechanized handling of material (such as forklifts, Cranes, Trucks etc.) are available for safe & proper warehousing.

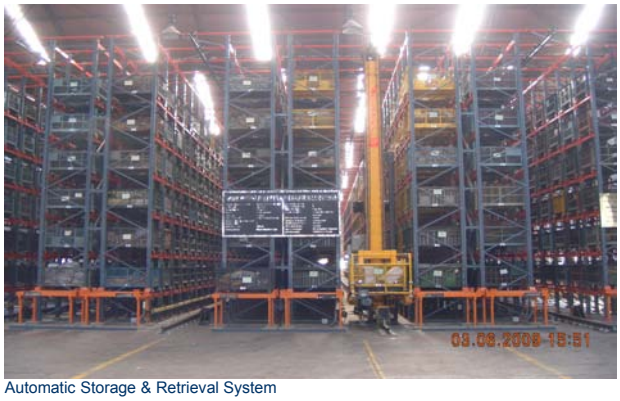

Automatic Storage & Retrieval System

3.2 Continuous monitoring of Critical items is done through Daily Morning Shop-floor meetings and weekly Production meetings so as to ensure uninterrupted flow of material for production of coaches as per dynamic production plan and target.

3.3 Inventory management is done through continuous watch on transactions (receipt and issues), High value items, ABC analysis, FSN method, regulation of Delivery period / delivery schedules and Budgetary control of Purchase Grant.

3.4 69 Railway wagons & 13081 Road trucks were handled by hardworking staff of depots upto March.2011, without any serious accident to men or loss to the property. Total issues were to the tune of Rs.1358.38 Crores and Closing Balance (on 31.03.2011) was Rs. 226.24 Crores, thereby resulting in TOR (Turn-Over Ratio) of 16.65%. Effective control on receipts was ensured through less buffer for high value items and deferment of deliveries for the item where sufficient stock was available upto March 2011

4.0 SCRAP DISPOSAL

Collection of process scrap generated on Shop floor is done on regular basis through Scrap collection and transportation contract, Homogeneous lots are formed after segregation / classification of similar type of material. Other source of scrap is that of obsolete and unserviceable stores. These lots are put up to Survey committee (SC) for close examination regarding alternate use and reclamation. Only after due approval on the recommendations of SC, by competent authority (COS/GM), Sale of scrap is done normally through competitive bidding obtained in Public auction. If required, scrap is also sold through tendering. All activities related to accountal of receipts and disposal of scrap are computerized. Electronic Weighbridge is available in depot for correct measurement and delivery of sold scrap. In-spite of less generation/ arising of scrap, due to out- sourcing of sheet metal items, RCF has achieved sale of Rs.15.01 crores against target of Rs.14 crores.

5.0 COMPUTERIZATION

5.1 Most of the activities of Purchase and Depot working are done on integrated modules of MMIS (Material Management Information system) with on-line connectivity between various users and locations (TKJ / HSQ). The system is quite user-friendly and menu-driven exception reports are available for all critical stages of process for quick and effective decision-making by concerned officials. Security of data is ensured through privileged access and double- layer passwords. Internal customers have been given controlled access to system for knowing the position regarding coverage of demands and availability of stock

5.2 An interactive and comprehensive real-time system, with display on LCD Projector and immediate updating of remarks by various departments/ officers, is available for discussion of Critical items in Production meeting. .

5.3 Adequate numbers of PC & Printers have been provided at work-stations and to officers / staff. On-line availability of all relevant information (such as Complete status : Stock & dues position , Performance of the firm, Vendor rating etc) facilitate in speedy and efficient settlement of tenders. Drawings/ Specifications are sent to firms on CD-ROM.

5.4 Web-site for Stores

A web site containing major activities of Stores dept. has been developed. Following details are available on RCF web site: www.rcf.indianrailways.gov.in

- All Advertised Tender notices.
- Complete tender document for Advertised Tenders (Facility has also been developed to down load tender documents from internet and prospective bidder's can participate in Advertised tenders by down loading tender documents from internet).
- IRS Conditions of Contract.
- Procedure & application form for registration.
- Details of P.O. valuing Rs.5 lakhs to 20 lakhs and 20 lakhs & above placed during the month.
- Status of applications of vendors (New Registration & Renewal)
- E-tender/IREPS link
- Directory of RCF Approved Vendors
- Customer feedback.

5.5 Availability of following information is given to Vendors through e-mail / SMS alerts

- Call attention notice of AT
- Intimation of LT
- intimation of
- Reminder of expiry of DP (Delivery Period) intimation of Received consignments and Receipt Note.
- Intimation of Rejected material.
- Information of EFT (Electronic Fund Transfer) Payment

5.6 IREPS (Indian Railway Electronic Procurement System) : www.ireps.gov.in

RCF has completely switched over to e-tendering for regular Purchase of Stock items and has been front- runner amongst all Zonal Railways/ PU for implementation of IREPS. Regular training sessions have been conducted to make the vendor aware of new system of tendering and full support has been provided through nominated officers for responding to queries and problems encountered by them regarding submission of Bids in e-tenders. This new system of electronic tendering has following advantages:

- Increased transparency
- Shorter procurement cycle
- Anytime & Anywhere bidding
- Reduction in cost of bidding
- Easier evaluation and comparison of bids.
- Better security of data
- Standardization of bids & tender formats

As a step towards better connectivity, web-site of EPS has been made accessible at RCF via FOIS network by providing 2 Mbps RailTel leased line from Jalandhar.

During the financial year 2010-11, RCF hosted 3668 tenders on web-site of IREPS, out of which 268 were opened and 1937 were decided.

6.0 VENDOR DEVELOPMENT

6.1 Registration of Vendors is done after thorough assessment by technical officer of Design department by inspection of Vendor's premises for verification of their Technical capability and Financial capacity. Renewal of registration is based on past performance of vendor. System of Vendor rating is available for screening and weeding out poor performers. Application forms for Registration are available on sale from special counter of Purchase Office and also can be downloaded by Vendors from Website of RCF. Up to 31.03.2011, there are 225 Registered vendors.

6.2 Interaction with vendors for identification of potential vendors and to guide the on new systems & procedures (e-tendering / IREPS). Regular meetings are also conducted with vendors of Critical items (such as Seat & Berths, Partition Frames etc) to understand and plan the deliveries from suppliers . Representatives of COS office also participated in the Exhibition-cum-Buyer/seller meet, held by MSME : Micro Small & Medium Enterprises : at Jammu (Nov-2005), Saharanpur (Dec-2009) Faridabad (Feb-2010) and Saharanpur (Feb-2011).

6.3 Approved list of Vendors are prepared for Critical items, through committee of PHOD and approval by CME/GM, for ensuring quality procurement from reliable / capable vendors

7.0 TRAINING AND SYSTEMS

7.1 One permanent trainer of Stores department (DMS) is posted in TTC : Technical Training Centre. Working employees are sent to attend the courses (Induction / Refresher) for upgrading their knowledge and skills. Officers are nominated for various courses conducted by Railway Staff College/ Vadodara and IRILLM/New Delhi

7.2 All units of Stores department have got 5-S and IMS certification (ISO : 9001, ISO : 14001 & OHSAS : 18001) for their quality system, Work-environment and Record-keeping, with utmost thrust on cleanliness/ continual improvement/ customer-satisfaction. On the basis of assessment by external auditor, during surveillance audit for the period October 2010 to March 2011, the office of CMM/HSQ was selected for par excellence certificate.

8.0 Comparative statistics for vital performance parameters are

#	Year	Unit	2001-2002	2002-2003	2003-2004	2004-2005	2005-2006	2006-2007	2007-2008	2008-2009	2009-2010	2010-2011
1	Demands	Nos.	5069	5114	9534	8519	8129	9138	9900	11374	10269	9224
2	Consignment received	Nos.	9476	9741	12722	14993	13139	12995	16630	15067	14448	17460
3	Wagons Handled	Nos.	542	323	487	251	226	163	NA	162	67	96
4	Trucks Handled	Nos.	7534	8235	10591	11061	10929	12170	NA	12440	12028	13990
5	Stock items	Nos.	5200	5114	6382	6779	7199	7825	6625	6637	6467	7415
6	Issue	Cr.	389	337	494	584	748	865	1015	1128	1091	1365
7	Closing Balance	Cr	49	46	54	72	97	127	148	223	216	222
8	Turnover ratio	%	12.64	13.53	10.93	12.15	13.03	14.74	14.60	19.75	19.82	16.27
9	Purchase Orders	No.	5164	4255	5221	4539	5051	4726	5557	5404	4736	5428
10	PO (Stock)	Nos.	3985	3087	4344	3698	4136	3661	4272	4255	3781	4535
11	PO(Non-Stock)	Nos.	1179	1168	877	895	879	1065	1285	1149	955	893
12	Value of PO	Cr.	207	353	439	593	710	969	1205	711	894	1619
13	Sale of Scrap	Cr.	5.61	7.56	10.44	3.02	15.72	14.00	15.60	13.70	15.36	15.01

ACCOUNTS

1.0 PROJECT

The project estimate was originally sanctioned under Capital 4200 (Workshop including Production Units) at the cost of Rs. 296.04 crore which has been revised to Rs. 451.06 crore vide letter no. 2001/M(W)/964/4 Dt. 21-5-2001 under Material Modification to the existing project.

The total expenditure under final heads for fixed assets and M&P is Rs. 888.44 crore up to March **2011**. This includes expenditure incurred on project cost of RCF both from Capital and DRF under all the Plan Heads like 1700 (Computerisation), Other Elect. Works (3600), Machinery & Plant (4100), Staff Quarters (5100), Amenities for Staff (5200) and Other Specified Works (6400).

The closing balance of floating assets (Inventories Cap -7100, Cap -7200 and Cap -7300) is Rs 315.67.00 crore. The break-up of fixed and floating assets is as under: -

Outlay to end of 31st March' 2011

(Figures in crores of Rs.)

I. Fixed Assets	
a) Project Township	111.41
b) W/s. & Offices	777.03
Total Fixed Assets (a+b)	**888.44**
II. Floating Assets	
a) Stores Suspense	228.90
b) W/s. Mfg. Suspense	68.84
c) Misc. Adv. Cap.	17.93
Total Floating Assets [a+b+c]	315.67
Total Assets (Fixed & Floating)	**1204.11**

Break up of Fixed Assets by important categories	
Fixed Assets	**Amount**
Land	8.98
Road & Permanent Way	5.38
Buildings and Other Structural Engg. Works	260.07
Machinery and Plant	544.49
Electrical Installation	43.42
General Charges	26.10
Total Fixed Assets	**888.44**

3.0 STATEMENT OF 39-B

Stores Transactions during the year 2010-11

(Figures in Crores of Rs.)

Item	Description	Amount
1	**OPENING BALANCE AT THE BEGINNING OF THE YEAR**	
a)	Physical balance without adjustment	224.12
b)	Adjustment (7170 to 7190)	3.29
c)	Balance under (7110 to 7150)	9.08
2	**TRANSACTION OF PHYSICAL STOCK DURING THE YEAR**	
a)	Receipts	1356.96
b)	Issues	1364.6
3	**CLOSING BALANCE AT THE END OF THE YEAR**	
a)	Physical balance without adjustment	222.30
b)	Adjustment (7170 to 7190)	2.65
c)	Balance under (7110 to 7150)	3.94
d)	Total balance as per Appropriation Account(P 7100)	228.89
4	**CLOSING BALANCE BY TYPES OF STORES**	
a)	Ordinary	216.47
b)	Surplus	
i)	Movable	9.54
ii)	Dead	0
c)	Emergency	
d)	Stores obtained for special works	
e)	Scrap	2.88
	TOTAL	228.89

2.0 STATEMENT SHOWING CALCULATION OF INTEREST ON APPROPRIATION TO PENSION FUND FOR AND TO END OF THE YEAR 2010- 11

(Figures in units of Rs.)

S.No.	Particulars	Amount
1	Balance as on 31.03.10	3067470333
2	TWFA	0
3	Balance as on 01.04.2010	3067470333
4	Less : Reduction of interest for 2009-10	-28344440
5	Balance as on 01.04.2010 for purpose of interest calcluation for 2010-11(3+4)	3039125893
6	Appropriation during the year 2010-2011	295772000
7	Withdrawal during the year 2010-2011	108185320
8	Net Accrual during the year 2010-2011 (Col.6-7)	187586680
9	Half of the Net Accrual(Half of item 8)	93793340
10	Total Amount on which interst is worked out for 2010-11(item5+9)	3132919233
11	Interest @6% on item No.10	187975154
12	Adjustment of previous year 2009-10	-28344440
13	Closing Balance as on 31.03.2011 (Col. 3+8+11+12)	3414687727

5.0 STATEMENT SHOWING CALCULATION OF INTEREST ON APPROPRIATION TO DRF FOR AND TO END OF THE YEAR 2010 - 2011

(Figures in units of Rs.)

S.No	Particulars	Amount
1	Balance as on 31.03.2010	5870906839
2	TWFA	0
3	Balance of DRF as on 01.04.2010	5870906839
4	Less : Reduction of interest for 2009-10	-54313096
5	Balance as on 01.04.2010 for purpose of interest calcluation for 2010-11 (3-4)	5816593743
6	Appropriation during the year 2010-2011	273900000
7	Withdrawal during the year 2010-2011	152920683

S.No.	Particulars	Amount
8	Net Accrual during the year 2010-2011 (Col.6-7)	120979317
9	Half of the Net Accrual(Half of item 8)	60489659
10	Total Amount on which interst is worked out for 2010-11(item5+9)	5877083402
11	Interest @**6**% on item No.10	352625004
12	Adjustment of previous year 2009-10	-54313096
13	Closing Balance as on 31.03.2011 (Col. 3+8+11+12)	6290198064

MANUFACTURING SUSPENSE ACCOUNT FOR THE YEAR 2010-2011

(fig.in units of Rs)

PARTICULARS	DEBITS	PARTICULARS	CREDITS	D.S. CREDITS
TO OPENING BAL.		Trf. to Railway	**16707614676**	NIL
WORK-IN-PROG	724228291	Supply of Coaches		
TO LABOUR				
DIRECT LAB. (W.SHOP)	853102920			
INDIRECT LAB(W.SHOP)	1057629243			
WORKS CONTRACT	3259999			
SALARY &ALLOW(ADM)	677426350			
SALARY & ALLOW(SOH)	76713698			
SALARY &ALLOW(TOH)	78081595			
TOTAL(B)	**2746213805**			
TO STORE				
STORE DIR from STOCK	12850519830			
INDIRECT STORE-(FOH)	202397626			
INDIRECT STORE-(AOH)	7478406			
INDRICT STORE-(SOH)	0			
INDIRECT STORE-(TOH)	0			
TOTAL (C)	**13060395862**			
TO DDO				
DDO STORE	52978871			
DDO -(FOH)	122879950			
DDO-(AOH)	185154152			
DDO (SOH)	36870979			
DDO-(TOH)	48847250			
TOTAL (D)	**446731202**			
MISC.CHARGES				
ADJUSTMENT(FOH)	40156257			
ADJUSTMENT(AOH)	12283150			
ADJUSTMENT (SOH)	-6509253			
ADJUSTMENT (TOH)	-139133			
MISC ADJUSTMENT	-40446010			
APPN. TO PENSION	295772000			
APPN. TO DRF.	273900000			
APPN. TO SBF	3857612			
ELECTRICITY (POWER)	135098320			
STOCK ADJUSTMENT	0			
LD/PROFIT	-10429284			
REC. ON RENT/WATER	-6764686			
REC. ON ELECT	-29491770			
TOTAL (E)	**667287203**			
RETURNMENT STORE				
BOGGI	-115736451			
OFF CUTS	-133072898			
TOTAL (F)	**-248809349**			
OUTLAY TO WMS (G)	0			
TOTAL (B+C+D+E+F+G)	**16671818723**	**BY CLOSING BAL**		
WORK-IN-PROG	**724228291**	WORK-IN-PROG	**688432338**	NIL
TOTAL WMS	**17396047014**		**17396047014**	
DS	NIL	DS	NIL	
GRAND TOTAL	**17396047014**	**GRAND TOTAL**	**17396047014**	NIL

STATEMENT No. 38
STORES PURCHASED DURING THE YEAR 2010-11

(Figs. in thousands of Rs.)

Sr. No.	Description	Groups covered under the head	Value of Imported Stores Direct.	Value of Imported Stores purchased in India.	Value of Stores manufactured in India or of Indigenous Origin
1	Steam loco parts & fittings	00-19	0	0	0
2	Diesel loco parts & fittings	10-19	0	0	0
3	Elect.loco parts & fittings	20-29	0	0	114
4	Carriage & wagons,EMU parts&fittings	30-39	128708	0	9919483
5	Electric stores	40-49	0	0	1673384
6	Signals & telecommunication stores	50-59	0	0	0
7	P.way material tracttools & bridge work	60	0	0	0
8	Engineering stores covering building	61-69	0	0	65986
9	Abresives,tools hardware etc.	70,72,73,74	0	0	32709
10	Brushes,brushware etc.	71	0	0	66
11	India rubber leather canves	75	0	0	149279
12	Electrodes and welding accessories	76	0	0	37608
13	Paints,enamels and varnishes	77	0	0	110099
14	Crockery,sutlery & nappery	78	0	0	0
15	Cloth,clothing & personal equipment	79	0	0	40406
16	Petrolium products other than fuel	80	0	0	5254
17	Refractories packing material etc.	84	0	0	65674
18	Ball and roller bearings	85	0	0	103590
19	Genral stores covering acids chemical, drugs,pharmaceauticals,other misc. store as fire fighting equipment	81,82-86	0	0	43722
20	stationery forms etc.	83	0	0	3570
21	Metal ferrous	90	0	0	1004999
22	Metal nonferrous	91	0	0	10481
23	Fuel-coal/coke etc.	92	0	0	0
24	Fuel-oil	92	0	0	0
25	Timber	93	0	0	96666
26	Scrap	97	0	0	132881
27	Rolling stock complete unit		0	0	29
28	M&P Stores		3284	0	74996
29	Other non stock items		2177	0	444554
	TOTAL		134169	0	14015550

STATEMENT No. 39-A
STORE TRANSACTIONS DURING THE YEAR 2010-11

(figs. In thousands of Rs.)

Sr. No.	Description	Groups covered under the head	Opening Balance in the beginning of the year	Receipt during the year	Issues during the year	Closing Balance at the end of the year.
1	Steam loco parts & fittings	3	0	0	0	0
2	Diesel loco parts & fittings	10-19	0	0	0	0
3	Elect.loco parts & fittings	20-29	2190	114	607	1697
4	Carriage & wagons,EMU parts & fittings	30-39	1533048	10050807	10154272	1429583
5	Electric stores	40-49	183533	1673384	1558806	298111
6	Signals & telecommunication stores	50-59	0	0	0	0
7	P.way material tracttools & bridge work	60	139	0	0	139
8	Engineering stores covering building	61-69	46275	65986	69617	42644
9	Abresives,tools hardware etc.	70,72,73,74	43588	32709	36789	39508
10	Brushes,brushware etc.	71	748	66	596	218
11	India rubber leather canves	75	23303	149279	148295	24287
12	Electrodes and welding accessories	76	3210	37608	48551	-7733
13	Paints,enamels and varnishes	77	16193	110099	112297	13995
14	Crockery,sutlery & nappery	78	107	0	37	70
15	Cloth,clothing & personal equipment	79	14309	40406	42635	12080
16	Petrolium products other than fuel	80	14854	5254	10224	9884
17	Refractories packing material etc.	84	3911	65674	63091	6494
18	Ball and roller bearings	85	25804	103590	113139	16255
19	Genral stores covering acids chemical, drugs, pharmaceauticals, other misc. store as fire fighting equipment	81,82-86	3320	43722	43835	3207
20	stationery forms etc.	83	2821	3570	4603	1788
21	Metal ferrous	90	234755	1004999	978339	261415
22	Metal nonferrous	91	23652	10481	14897	19236
23	Fuel-coal/coke etc.	92	0	0	0	0
24	Fuel-oil	92	0	0	0	0
25	Timber	93	50181	96666	90136	56711
26	Scrap	98	14063	132881	154648	-7704
27	others stores		1183	29	90	1122
	SUB TOTAL		2241187	13627324	13645504	2223007
	ADJUSTMENTS		0	0		
	GRAND TOTAL		2241187	13627324	13645504	2223007

BREAK UP OF UNIT COST & ACTUAL PRODUCTION OF ROLLING STOCK
UNIT COST OF PRODUCT

(Figures in lacs of Rs)

	DIRECT COST			OVERHEADS								
TYPE OF COACHES	YEAR	LAB.	MAT.	FOH	AOH	TOH	SOH	TOTAL O/Heads	PROF. CHAR.	TOTA L COST	TOTAL COST (Without proforma charges)	ACTUAL OUT TURN
1	2	3	4	5	6	7	8	9	10	11	12	13
SCN/AB	2008-09	3.37	37.97	5.85	4.16	0.97	0.22	11.20	2.17	54.71	52.54	91
	2009-10	4.11	46.15	6.20	5.49	1.10	0.18	12.97	2.91	66.14	63.23	244
	2010-11	4.38	45.7	7.33	5.8	1.17	0.37	14.69	1.63	66.4	64.77	300
SCN/AB (CBC)	2008-09	3.37	53.85	5.85	4.16	0.97	0.31	11.29	2.83	71.34	68.51	62
	2009-10	4.27	62.28	6.75	5.09	1.11	0.59	13.54	3.69	83.78	80.09	25
	2010-11	NM	NM	NM	NM	NM	NM	NM	NM	NM	NM	NM
SLR/AB	2008-09	3.12	36.48	5.43	3.87	0.90	0.21	10.41	2.07	52.08	50.01	53
	2009-10	3.82	39.95	5.76	5.10	1.02	0.15	12.03	2.57	58.37	55.80	90
	2010-11	4.07	41.99	6.81	5.39	1.09	0.34	13.63	1.89	61.58	59.69	183
SLR/AB (CBC)	2008-09	3.12	40.10	5.43	3.87	0.90	0.23	10.43	2.22	55.87	53.65	26
	2009-10	3.98	38.03	6.28	4.74	1.04	0.36	12.42	2.51	56.94	54.43	12
	2010-11	NM	NM	NM	NM	NM	NM	NM	NM	NM	NM	NM
GS/AB	2008-09	3.09	38.16	5.38	3.83	0.89	0.22	10.32	2.13	53.70	51.57	160
	2009-10	3.78	41.28	5.70	5.05	1.01	0.16	11.92	2.63	59.61	56.98	417
	2010-11	4.04	44.49	6.77	5.35	1.08	0.36	13.57	2.37	64.47	62.10	295
GS/AB (CBC)	2008-09	3.09	48.66	5.38	3.83	0.89	0.28	10.38	2.57	64.70	62.13	128
	2009-10	3.92	56.65	6.20	4.67	1.02	0.54	12.43	3.37	76.37	73.00	17
	2010-11	NM	NM	NM	NM	NM	NM	NM	NM	NM	NM	NM
GSRD	2008-09	3.11	35.87	5.41	3.85	0.89	0.21	10.36	2.04	51.38	49.34	118
	2009-10	NM	NM	NM	NM	NM	NM	NM	NM	NM	NM	NM
	2010-11	NM	NM	NM	NM	NM	NM	NM	NM	NM	NM	NM
MEMU/ MC	2008-09	7.67	169.35	13.34	9.49	2.20	0.98	26.01	8.40	211.43	203.03	16
	2009-10	9.33	205.01	14.13	12.51	2.49	0.78	29.91	11.26	255.51	244.25	15
	2010-11	9.88	211.93	16.55	13.09	2.65	1.74	34.04	8.27	264.12	255.85	14
MEMU/ TC	2008-09	3.18	38.70	5.52	3.93	0.91	0.22	10.58	2.17	54.63	52.46	48
	2009-10	3.88	45.77	5.85	5.18	1.03	0.17	12.23	2.85	64.73	61.88	40
	2010-11	4.10	49.13	6.87	5.43	1.10	0.40	13.80	2.13	69.17	67.04	35
ACCN/SG	2008-09	5.70	87.91	9.91	7.05	1.64	0.51	19.11	4.66	117.38	112.72	127
	2009-10	7.11	103.36	11.24	8.48	1.86	0.96	22.54	6.13	139.14	133.01	85
	2010-11	7.38	94.06	12.36	9.78	1.98	0.77	24.89	4.14	130.48	126.34	175

1	2	3	4	5	6	7	8	9	10	11	12	13
ACCN/ SG(CBC)	2008-09	5.70	101.22	9.91	7.05	1.64	0.59	19.19	5.22	131.33	126.11	38
	2009-10	7.11	116.88	11.24	8.48	1.86	1.11	22.69	6.76	153.44	146.68	10
	2010-11	NM	NM	NM	NM	NM	NM	NM	NM	NM	NM	NM
WACCNH	2008-09	5.88	63.32	10.22	7.27	1.69	0.37	19.55	3.67	92.42	88.75	216
	2009-10	5.91	63.32	10.22	7.27	1.69	0.37	19.55	4.09	92.87	88.78	80
	2010-11	NM	NM	NM	NM	NM	NM	NM	NM	NM	NM	NM
WACCNH (H.HEIGHT)	2008-09	NM	NM	NM	NM	NM	NM	NM	NM	NM	NM	NM
	2009-10	5.91	63.32	10.22	7.27	1.69	0.37	19.55	4.09	92.87	88.78	1
	2010-11	NM	NM	NM	NM	NM	NM	NM	NM	NM	NM	NM
WGFCNAC	2008-09	5.69	76.84	9.90	7.05	1.64	0.45	19.04	4.20	105.77	101.57	20
	2009-10	NM	NM	NM	NM	NM	NM	NM	NM	NM	NM	NM
	2010-11	NM	NM	NM	NM	NM	NM	NM	NM	NM	NM	NM
WRRMDAC	2008-09	5.50	178.75	9.56	6.80	1.58	1.04	18.98	8.40	211.63	203.23	36
	2009-10	6.70	179.46	10.13	8.97	1.79	0.68	21.57	9.58	217.31	207.73	10
	2010-11	NM	NM	NM	NM	NM	NM	NM	NM	NM	NM	NM
WGCWNAC	2008-09	5.58	88.03	9.70	6.90	1.60	0.51	18.71	4.65	116.97	112.32	55
	2009-10	NM	NM	NM	NM	NM	NM	NM	NM	NM	NM	NM
	2010-11	7.22	93.76	13.17	8.39	2.16	0.64	24.35	4.07	129.41	125.34	15
SG Non AC/ RA AB	2008-09	4.01	48.30	6.98	4.97	1.15	0.28	13.38	2.72	68.41	65.69	30
	2009-10	NM	NM	NM	NM	NM	NM	NM	NM	NM	NM	NM
	2010-11	NM	NM	NM	NM	NM	NM	NM	NM	NM	NM	NM
RDSO COACH LHB	2008-09	7.11	156.63	12.36	8.8	2.04	0.91	24.11	7.77	195.62	187.85	3
	2009-10	NM	NM	NM	NM	NM	NM	NM	NM	NM	NM	NM
	2010-11	NM	NM	NM	NM	NM	NM	NM	NM	NM	NM	NM
VPH	2008-09	2.41	29.58	4.20	2.99	0.69	0.17	8.05	1.66	41.70	40.04	100
	2009-10	2.96	34.16	4.45	3.94	0.79	0.13	9.31	2.14	48.57	46.43	16
	2010-11	NM	NM	NM	NM	NM	NM	NM	NM	NM	NM	NM
VPH/CBC	2008-09	2.41	29.58	4.20	2.99	0.69	0.17	8.05	1.66	41.70	40.04	25
	2009-10	NM	NM	NM	NM	NM	NM	NM	NM	NM	NM	NM
	2010-11	NM	NM	NM	NM	NM	NM	NM	NM	NM	NM	NM
VPU	2008-09	2.42	29.81	4.20	2.99	0.69	0.17	8.05	1.67	41.95	40.28	25
	2009-10	2.99	34.22	4.73	3.57	0.78	0.33	9.41	2.15	48.77	46.62	25
	2010-11	NM	NM	NM	NM	NM	NM	NM	NM	NM	NM	NM
EOG/LHB/ ACCB	2008-09	7.87	172.36	13.69	9.74	2.26	1.00	26.69	8.56	215.48	206.92	5
	2009-10	9.82	178.21	15.13	11.41	2.50	1.69	30.73	8.57	227.33	218.76	9
	2010-11	10.38	184.34	16.98	13.43	2.72	1.51	34.64	7.17	236.53	229.36	22

1	2	3	4	5	6	7	8	9	10	11	12	13
EOG/LHB/ WLRRM	2008-09	8.09	270.00	14.07	10.01	2.33	1.57	27.98	12.66	318.73	306.07	8
	2009-10	9.94	285.52	17.82	12.05	2.68	1.73	34.28	12.92	342.66	329.74	14
	2010-11	10.51	246.6	17.19	13.59	2.75	2.02	35.56	9.42	302.08	292.66	36
EOG/LHB/ ACCW	2008-09	8.49	156.75	14.77	10.51	2.44	0.91	28.63	8.02	201.89	193.87	22
	2009-10	10.63	177.81	16.41	12.37	2.71	1.69	33.18	8.68	230.30	221.62	14
	2010-11	11.24	178.25	18.42	14.57	2.95	1.46	37.39	7.12	234.01	226.89	58
EOG/LHB/ ACCN	2008-09	8.77	160.63	15.26	10.86	2.52	0.93	29.57	8.23	207.20	198.97	42
	2009-10	10.73	205.56	16.17	14.32	2.85	0.78	34.12	8.58	258.99	250.41	48
	2010-11	11.57	179.28	18.97	15.01	3.04	1.47	38.49	7.20	236.54	229.34	99
LGS(LC)	2008-09	4.82	72.48	8.39	5.97	1.39	0.42	16.17	3.86	97.33	93.47	22
	2009-10	4.82	62.2	8.39	5.97	1.39	0.42	16.17	3.83	87.02	83.19	20
	2010-11	7.79	81.84	12.86	10.17	2.06	0.67	25.76	3.74	119.13	115.39	14
LGSCNH (LC)	2008-09	5.07	77.79	8.81	6.27	1.46	0.45	16.99	4.13	103.98	99.85	20
	2009-10	5.07	66.81	8.81	6.27	1.46	0.45	16.99	4.01	92.88	88.87	72
	2010-11	8.15	83.3	13.55	10.72	2.17	0.68	27.13	3.49	122.06	118.57	52
LSLRD (LC)	2008-09	4.69	55.99	8.15	5.8	1.35	0.32	15.62	3.15	79.45	76.3	6
	2009-10	4.69	47.59	8.15	5.8	1.35	0.32	15.62	3.13	71.03	67.90	4
	2010-11	7.48	84.90	12.34	9.76	1.98	0.70	24.77	3.80	120.95	117.15	6
LGACNH (LC)	2008-09	7.36	121.37	12.81	9.11	2.12	0.7	24.74	6.35	159.82	153.47	4
	2009-10	8.89	158.98	13.97	10.54	2.31	1.51	28.33	8.05	204.25	196.20	40
	2010-11	9.55	154.7	15.81	12.5	2.53	1.27	32.11	6.08	202.44	196.36	30
LGSLR	2008-09	5.40	60.83	9.39	6.68	1.55	0.35	17.97	3.49	87.69	84.2	3
	2009-10	5.59	86.71	8.75	6.6	1.44	0.82	17.61	4.51	114.42	109.91	24
	2010-11	5.91	70.13	9.70	7.67	1.55	0.58	19.49	3.14	98.67	95.53	10
LGACW NAC (LC)	2008-09	7.44	67.86	12.95	9.21	2.14	0.39	24.69	4.13	104.12	99.99	4
	2009-10	9.02	159.08	13.85	10.44	2.29	1.51	28.09	8.05	204.24	196.19	1
	2010-11	NM	NM	NM	NM	NM	NM	NM	NM	NM	NM	NM
EOG/LHB/ FAC	2008-09	8.78	155.53	15.26	10.86	2.52	0.90	29.54	8.02	201.87	193.85	3
	2009-10	10.95	178.07	16.92	12.76	2.79	1.69	34.16	8.74	231.92	223.18	8
	2010-11	11.58	176.74	18.98	15.02	3.04	1.45	38.49	7.28	234.09	226.81	17
EOG/LHB/ FACCZ	2008-09	7.74	184.64	13.46	9.57	2.22	1.07	26.32	9.05	227.75	218.70	4
	2009-10	9.65	183.03	14.87	11.21	2.45	1.74	30.27	8.74	231.69	222.95	4
	2010-11	10.21	188.39	16.68	13.20	2.67	1.54	34.10	6.14	238.84	232.7	3
EOG/LHB/ SCZAC	2008-09	7.74	181.95	13.46	9.57	2.22	1.06	26.31	8.93	224.93	216	25
	2009-10	9.65	182.26	14.87	11.21	2.45	1.73	30.26	8.71	230.88	222.17	46
	2010-11	10.21	186.94	16.68	13.20	2.67	1.53	34.09	7.05	238.29	231.24	17

1	2	3	4	5	6	7	8	9	10	11	12	13
EOG/LHB/ WLRRMU	2008-09	7.97	299.98	13.86	9.86	2.29	1.74	27.75	13.88	349.58	335.7	6
	2009-10	NM	NM	NM	NM	NM	NM	NM	NM	NM	NM	NM
	2010-11	NM	NM	NM	NM	NM	NM	NM	NM	NM	NM	NM
WGCB (LC)	2008-09	NM	NM	NM	NM	NM	NM	NM	NM	NM	NM	NM
	2009-10	5.75	86.77	9	6.79	1.49	0.82	18.10	4.54	115.16	110.62	8
	2010-11	6.38	110.86	10.59	8.38	1.70	0.91	21.58	3.35	142.17	138.82	8
ACCW (LC)	2008-09	NM	NM	NM	NM	NM	NM	NM	NM	NM	NM	NM
	2009-10	10.12	130.97	15.81	11.92	2.61	1.24	31.58	7.08	179.75	172.67	13
	2010-11	10.70	153.98	17.84	14.11	2.86	1.26	36.07	5.99	206.74	200.75	21
FAC (LC)	2008-09	NM	NM	NM	NM	NM	NM	NM	NM	NM	NM	NM
	2009-10	8.8	151.62	13.5	10.18	2.23	1.44	27.35	7.70	195.47	187.77	10
	2010-11	9.18	156.57	15.27	12.08	2.45	1.28	31.09	5.96	202.79	196.83	16
VPHX	2008-09	NM	NM	NM	NM	NM	NM	NM	NM	NM	NM	NM
	2009-10	2.96	34.16	4.45	3.94	0.79	0.13	9.31	2.14	48.57	46.43	84
	2010-11	3.05	37.29	5.55	3.54	0.91	0.25	10.26	1.57	52.16	50.59	100
LWSCZDAC	2008-09	NM	NM	NM	NM	NM	NM	NM	NM	NM	NM	NM
	2009-10	NM	NM	NM	NM	NM	NM	NM	NM	NM	NM	NM
	2010-11	14.81	190.08	24.4	19.3	3.91	1.56	49.16	8.23	262.29	254.06	9
LWSCZ	2008-09	NM	NM	NM	NM	NM	NM	NM	NM	NM	NM	NM
	2009-10	NM	NM	NM	NM	NM	NM	NM	NM	NM	NM	NM
	2010-11	8.11	124.32	14.35	9.14	2.35	0.85	26.68	5	164.11	159.11	14
RA SHELL	2008-09	NM	NM	NM	NM	NM	NM	NM	NM	NM	NM	NM
	2009-10	NM	NM	NM	NM	NM	NM	NM	NM	NM	NM	NM
	2010-11	2.5	33.62	4.58	2.91	0.75	0.23	8.47	1.44	46.03	44.59	1

TOTAL NO. OF COACHES AND TRANSFER PRICE OF COACHES MANUFACTURED DURING THE YEAR 2009-2010 AND 2010-2011

Sr. No.	TYPE OF COACHES	PRODUCTION OF COACHES FOR 09-10	TRANSFER PRICE FOR 09-10	PRODUCTION OF COACHES FOR 10-11	TRANSFER PRICE FOR 10-11 (In lacs of Rs.)
(A)	NON AC COACHES				
1	SG SCN	244	66.14	300	64.76
	SG SCN (CBC)	25	83.78	0	0
2	SG SLR	0	0	0	0
	SG SLR (CBC)	0	0	0	0
3	SLRD	90	58.37	183	59.69
4	SLRD (CBC)	12	56.93	0	0
5	SG GS	417	59.6	295	62.09
	SG GS (CBC)	17	76.36	0	0
6	SG RA N AC	0	0	0	0
7	SG VPU	0	0	0	0
8	SG VPH	0	0	0	0
	SG VPH (CBC)	0	0	0	0
9	VPHX SG	84	48.55	100	50.59
10	VPUX SG	25	48.76	0	0
11	VPH SG	16	48.55	0	0
12	MEMU MC	15	255.52	14	255.85
13	MEMU TC	40	64.74	35	67.04
14	MB IU	0	0	0	0
15	RA SHELL	0	0	1	44.58
	TOTAL(A)	**985**		**928**	
(B)	AC COACHES				
15	SG ACCN	85	139.13	175	126.34
	WG ACCN (CBC)	10	153.43	0	
16	AC SLEEPING COACH(Garib Rath)	80	92.87	0	
17	ACCNH (GR) (H.HEIGHT)	1	92.87	0	
18	POWER CARS WITH AC COMPARTMENT	10	217.29	0	
19	WGFCNAC	0	0	0	
20	WGCWNAC	0	0	15	125.34
	TOTAL - (B)	**186**		**190**	
(C)	LHB COACHES				
21	EOG ACCB LHB	9	194.51	22	229.36
22	EOG WLRRM LHB	14	293.20	36	292.66
23	EOG WLRRMU LHB	0	0.00	0	0.00
24	EOG ACCW LHB	14	197.06	58	226.89
25	EOG ACCN LHB	48	194.50	99	229.34
26	EOG FAC LHB	8	198.44	17	226.8
27	EOG FCZAC LHB	4	198.25	3	232.7
28	EOG SCZAC LHB	46	197.55	17	231.24
29	LWCZDAC	0	0.00	9	254.06
30	LWSCZ	0	0.00	14	159.11
	TOTAL (C)	**143**		**275**	
(D)	HYBRID COACHES				
30	LGS (LC)	20	87.01	14	115.39
31	LGSCNH(LC)	72	92.96	52	118.57
32	LSLRD(LC)	4	71.03	6	117.15
34	LGSLR	24	102.33	10	95.53
35	LGACWNAC(LC)	1	182.65	0	

Sr. No.	TYPE OF COACHES	PRODUCTION OF COACHES FOR 09-10	TRANSFER PRICE FOR 09-10	PRODUCTION OF COACHES FOR 10-11	TRANSFER PRICE FOR 10-11 (In lacs of Rs.)
36	FAC (LC)	10	174.81	16	196.83
37	ACCN (LC)	40	182.67	30	196.36
38	ACCW (LC)	13	160.76	21	200.75
39	WCB (LC)	8	102.97	8	138.82
	TOTAL -(D)	**192**		**157**	
	TOTAL -(A+B +C+D)	**1506**		**1550**	**0**
(E)	**NON RAILWAY CUSTOMERS**				
35	TRC FOR RDSO	0	0	0	0
36	STAFF CAR FOR RDSO	0	0	0	0
	Senegal Railways				
37	MG Non AC Coaches	0	0	0	0
	Senegal & Mali Railways				
38	Ordinary Chair Car(SG)	0	0	0	0
39	Ordinary Chair Car(EOG)	0	0	0	0
40	MG-AC Chair car (EOG)(w/o Bogie)	0	0	0	0
41	MG-NAC Chair car (EOG)(w/o Bogie)	0	0	0	0
42	SLR (SG) (w/o Bogie)	0	0	0	0
43	SLR (EOG) (w/o Bogie)	0	0	0	0
44	MG Upper day Coach	0	0	0	0
45	MG Ordinary Coach	0	0	0	0
46	Guard cum Break van(EOG)	0	0	0	0
47	Guard cum Break van(SG)	0	0	0	0
48	Power Cars with AC Compartment	0	0	0	0
49	AC SLEEPING COACH(EOG)	0	0	0	0
50	AC RESTAURANT CUM BAR/EOG	0	0	0	0
51	MGDPC AC	0	0	8	117.50
52	MG TC NON AC	0	0	6	77.50
	Science & Technology				
53	BG AC ICF without Fur.	0	0	0	0
54	BG AC 3 T(EOG)(ICF)	0	0	0	0
55	BG Power Car (ICF)	0	0	0	0
	TOTAL -(E)	0		14	
	LOREM				
56	BG SCN (CW)	0	0	2	67.00
	Grand Total	**1506**		**1580**	

YEAR WISE PRODUCTION OF COACHES

COACH TYPE	87-88	88-89	89-90	90-91	91-92	92-93	93-94	94-95	95-96	96-97	97-98	98-99	99-00	00-01	01-02	02-03	03-04	04-05	05-06	06-07	07-08	08-09	09-10	10-11	Total
GS VB	1	119	30	0	190	824	31	0	0	0	0	0	0	0	0	0	0	0	0	0	0	0	0		1195
SCN VB	0	1	145	600	724	13	313	0	0	0	0	0	0	0	0	0	0	0	0	0	0	0	0		1796
SCZAC EOG	0	0	0	0	1	5	40	0	0	0	0	10	0	0	0	0	0	0	0	0	0	0	0		56
GS AB	0	0	0	0	0	21	0	124	86	102	138	300	180	243	150	173	212	186	176	294	310	160	417	295	3567
GS AB (CBC)	0	0	0	0	0	0	0	0	0	0	0	0	0	0	0	0	0	0	0	24	75	128	17		244
SCN AB	0	0	0	0	0	81	138	220	404	564	380	437	431	252	235	190	286	226	290	64	124	91	244	300	4957
SCN AB (CBC)	0	0	0	0	0	0	0	0	0	0	0	0	0	0	0	0	0	0	0	78	55	62	25		220
SLR VB	0	0	0	0	0	158	150	0	0	0	0	0	0	0	0	0	0	0	0	0	0	0	0		308
VPH	0	0	0	0	0	0	0	0	0	0	0	0	0	0	0	0	0	0	0	0	0	100	0		100
VPH(CBC)	0	0	0	0	0	0	0	0	0	0	0	0	0	0	0	0	0	0	0	0	0	25	0		25
VPU	0	0	0	0	0	0	0	0	0	0	0	0	0	0	0	0	0	0	41	25	25	25	0		116
VPHX SG	0	0	0	0	0	0	0	0	0	0	0	0	0	0	0	0	0	0	0	0	0	0	84	100	184
VPUX SG	0	0	0	0	0	0	0	0	0	0	0	0	0	0	0	0	0	0	0	0	0	0	25		25
VPH SG	0	0	0	0	0	0	0	0	0	0	0	0	0	0	0	0	0	0	0	0	0	0	16		16
ACCW EOG	0	0	0	0	0	10	0	5	11	12	11	6	8	12	8	0	0	0	0	0	0	0	0		83
GS DAY VB	0	0	0	0	0	0	260	0	0	0	0	0	0	0	0	0	0	0	0	0	0	0	0		260
GS DAY AB	0	0	0	0	0	0	41	147	0	0	150	0	0	0	0	0	0	0	0	0	0	0	0		338
SRD	0	0	0	0	0	0	0	0	0	0	0	0	0	0	0	0	0	0	0	30	100	118	0		248
SLR AB	0	0	0	0	0	0	31	135	50	80	144	85	101	232	220	100	134	135	218	98	96	53	90	183	2185
SLR AB (CBC)	0	0	0	0	0	0	0	0	0	0	0	0	0	0	0	0	0	0	0	22	13	26	12		73
ACCN EOG	0	0	0	0	0	0	15	0	0	0	0	0	18	18	20	0	10	0	0	0	0	0	0		81
AC IST SHAT	0	0	0	0	0	0	0	9	6	10	0	0	0	0	0	0	0	0	0	0	0	0	0		25
ACCN RAJ	0	0	0	0	0	0	0	69	23	18	14	22	0	0	0	0	0	0	0	0	0	0	0		146
SCZAC SHAT	0	0	0	0	0	0	0	5	1	0	0	0	0	0	0	0	0	0	0	0	0	0	0		6
ACCN SG	0	0	0	0	0	0	0	22	67	77	119	124	178	190	220	196	171	257	253	214	165	127	85	175	2640
ACCN SG (CBC)	0	0	0	0	0	0	0	0	0	0	0	0	0	0	0	0	0	0	0	40	30	38	10		118
ACCW SG INV	0	0	0	0	0	3	6	34	40	50	40	40	26	0	0	0	0	0	0	0	0	0	0		239
WGACCNH	0	0	0	0	0	0	0	0	0	0	0	0	0	0	0	0	0	0	0	57	109	216	80		462
WGACCNH (H.GEIGHT)	0	0	0	0	0	0	0	0	0	0	0	0	0	0	0	0	0	0	0	0	0	0	1		1
WGFCNAC	0	0	0	0	0	0	0	0	0	0	0	0	0	0	0	0	0	0	0	0	0	20	0		20
WRRMDAC	0	0	0	0	0	0	0	0	0	0	0	0	0	0	0	0	0	0	0	12	24	36	10		82
WGCWNAC	0	0	0	0	0	0	0	0	0	0	0	0	0	0	0	0	0	0	0	30	50	55	0	15	150
FAC RAJ	0	0	0	0	0	0	0	3	2	3	4	4	0	0	0	0	0	0	0	0	0	0	0		16
SCZAC RAJ	0	0	0	0	0	0	0	2	0	0	0	0	0	0	0	0	0	0	0	0	0	0	0		2
SCZAC EOG HS IRY	0	0	0	0	0	0	0	0	0	3	3	13	0	0	0	0	0	0	0	0	0	0	0		19
WLRRM EOG	0	0	0	0	0	0	0	0	0	1	2	0	0	0	0	0	0	0	0	0	0	0	0		3
RA SG	0	0	0	0	0	0	0	0	0	0	6	2	20	10	0	10	5	20	2	37	15	30	0		157
RA SG AC	0	0	0	0	0	0	0	0	0	0	0	0	0	0	0	0	5	5	4	5	5	0	0		24
RA SG(UNFURNISH	0	0	0	0	0	0	0	0	0	0	0	10	0	0	0	0	0	0	0	0	0	0	0		10
HTRC	0	0	0	0	0	0	0	0	0	0	1	0	0	0	0	0	0	0	0	0	0	0	0		1
MEMU MC	0	0	0	0	0	0	0	0	0	0	3	1	15	10	12	0	18	22	22	16	8	16	15	14	172
MEMU TC	0	0	0	0	0	0	0	0	0	0	9	6	60	30	36	0	54	66	66	48	25	48	40	35	523
MBIU	0	0	0	0	0	0	0	0	0	0	0	0	0	0	0	0	0	0	0	0	2	0	0		2

COACH TYPE	87-88	88-89	89-90	90-91	91-92	92-93	93-94	94-95	95-96	96-97	97-98	98-99	99-00	00-01	01-02	02-03	03-04	04-05	05-06	06-07	07-08	08-09	09-10	10-11	Total
RA SHELL	0	0	0	0	0	0	0	0	0	0	0	0	0	0	0	0	0	0	0	0	0	0	0	1	1
FCZAC EOG HS IRY	0	0	0	0	0	0	0	0	0	0	1	4	0	0	0	0	0	0	0	0	0	0	0		5
SCZACLR EOG HS IRY	0	0	0	0	0	0	0	0	0	0	2	0	0	0	0	0	0	0	0	0	0	0	0		2
WLRRM EOG HS IRY	0	0	0	0	0	0	0	0	0	0	1	2	2	0	0	0	0	0	0	0	0	0	0		5
OSCL GRAPH CAR	0	0	0	0	0	0	0	0	0	0	2	0	0	0	0	2	0	0	0	0	0	0	0		4
OHECAR	0	0	0	0	0	0	0	0	0	0	1	0	0	0	0	0	0	0	0	0	0	0	0		1
ART DTC	0	0	0	0	0	0	0	0	0	0	0	5	5	3	0	0	0	0	0	0	0	0	0		13
ART DPC	0	0	0	0	0	0	0	0	0	0	0	5	5	3	0	0	0	0	0	0	0	0	0		13
FAZAC EOG	0	0	0	0	0	0	0	0	0	0	0	2	0	0	0	0	0	0	0	0	0	0	0		2
HSTRC RDSO	0	0	0	0	0	0	0	0	0	0	0	1	0	0	0	0	0	0	0	0	0	0	0		1
STAFF CUM OFFICER	0	0	0	0	0	0	0	0	0	0	0	2	0	0	0	0	0	0	0	0	0	0	0		2
CAR FOR RDSO	0	0	0	0	0	0	0	0	0	0	0		0	0	0	1	0	0	0	0	0	0	0		1
PARCEL VAN (VPH)	0	0	0	0	0	0	0	0	0	0	0	0	105	100	100	99	115	120	50	55	110	0	0		854
PARCEL VAN (VPH)(CBC)	0	0	0	0	0	0	0	0	0	0	0	0	0	0	0	0	0	0	0	5	0	0	0		5
PARCEL VAN Refrigerated (VPR)	0	0	0	0	0	0	0	0	0	0	0	0	0	0	0	1	9	0	0	0	0	0	0		10
MG DMU MC	0	0	0	0	0	0	0	0	0	0	0	0	0	0	0	4	4	0	0	0	0	0	0		8
MG DMU TC	0	0	0	0	0	0	0	0	0	0	0	0	0	0	0	8	8	0	0	0	0	0	0		16
MG FC	0	0	0	0	0	0	0	0	0	0	0	0	0	15	20	0	0	0	0	0	0	0	0		35
MG GS	0	0	0	0	0	0	0	0	0	0	0	0	0	70	60	100	68	30	0	0	0	0	0		328
MG ACCW SG	0	0	0	0	0	0	0	0	0	0	0	0	0	0	0	0	0	1	0	0	0	0	0		1
MG AACZ SG	0	0	0	0	0	0	0	0	0	0	0	0	0	0	0	0	0	1	0	0	0	0	0		1
CONTAINER FLATS	0	0	0	0	0	0	0	0	0	0	0	0	0	1	0	0	0	0	0	0	0	0	0		1
RDSO COACH	0	0	0	0	0	0	0	0	0	0	0	0	0	1	0	0	0	0	0	0	0	0	0		1
SG GSD/DD	0	0	0	0	0	0	0	0	0	0	0	0	0	0	30	0	0	0	0	0	0	0	0		30
MG SLR	0	0	0	0	0	0	0	0	0	0	0	0	0	0	50	30	26	24	20	0	0	0	0		150
EOG FACCZ LHB	0	0	0	0	0	0	0	0	0	0	0	0	0	0	0	0	0	1	0	0	0	0	0		1
EOG ACCZ LHB	0	0	0	0	0	0	0	0	0	0	0	0	0	0	0	0	0	7	0	0	0	0	0		7
EOG SCZAC LHB	0	0	0	0	0	0	0	0	0	0	0	0	0	0	1	0	0	0	0	41	0	25	46	17	130
EOG FCZAC LHB	0	0	0	0	0	0	0	0	0	0	0	0	0	0	1	0	0	0	0	7	0	4	4	3	19
EOG ACCB LHB	0	0	0	0	0	0	0	0	0	0	0	0	0	0	3	3	6	7	5	6	11	5	9	22	77
EOG WLRRM LHB	0	0	0	0	0	0	0	0	0	0	0	0	0	0	5	5	6	6	5	14	11	8	14	36	110
EOG WLRRMU LHB	0	0	0	0	0	0	0	0	0	0	0	0	0	0	0	0	0	0	0	0	0	6	0		6
EOG FACCW LHB	0	0	0	0	0	0	0	0	0	0	0	0	0	0	2	3	0	0	0	0	0	0	0		5
EOG ACCW LHB	0	0	0	0	0	0	0	0	0	0	0	0	0	0	6	7	15	6	14	11	17	0	14	58	148
EOG ACCN LHB	0	0	0	0	0	0	0	0	0	0	0	0	0	0	8	9	29	14	20	35	49	42	48	99	353
EOG ACCN LHB (Low Cost)	0	0	0	0	0	0	0	0	0	0	0	0	0	0	0	0	0	0	0	0	1	0	0		1
SG ACCN LHB (Low Cost)	0	0	0	0	0	0	0	0	0	0	0	0	0	0	0	0	0	0	0	0	1	0	0		1
EOG FAC LHB	0	0	0	0	0	0	0	0	0	0	0	0	0	0	0	0	6	0	7	5	6	3	8	17	52
SG ACCN LHB	0	0	0	0	0	0	0	0	0	0	0	0	0	0	1	0	0	5	0	0	0	0	0		6
SG GS LHB	0	0	0	0	0	0	0	0	0	0	0	0	0	0	0	0	4	6	0	0	0	0	0		10
SG SCN LHB	0	0	0	0	0	0	0	0	0	0	0	0	0	0	0	0	8	15	0	0	0	0	0		23
SG SLR LHB	0	0	0	0	0	0	0	0	0	0	0	0	0	0	0	0	2	4	0	0	0	0	0		6
SG FA LHB	0	0	0	0	0	0	0	0	0	0	0	0	0	0	0	0	0	3	0	0	0	0	0		3
SG ACCW LHB	0	0	0	0	0	0	0	0	0	0	0	0	0	0	0	0	0	3	0	0	0	22	0		25
LWCZDAC LHB	0	0	0	0	0	0	0	0	0	0	0	0	0	0	0	0	0	0	0	0	0	0	0	9	9

COACH TYPE	87-88	88-89	89-90	90-91	91-92	92-93	93-94	94-95	95-96	96-97	97-98	98-99	99-00	00-01	01-02	02-03	03-04	04-05	05-06	06-07	07-08	08-09	09-10	10-11	Total
LWSCZ	0	0	0	0	0	0	0	0	0	0	0	0	0	0	0	0	0	0	0	0	0	0	0	14	14
LGS (LC)	0	0	0	0	0	0	0	0	0	0	0	0	0	0	0	0	0	0	0	0	0	22	20	14	56
LGSCNH (LC)	0	0	0	0	0	0	0	0	0	0	0	0	0	0	0	0	0	0	0	0	0	20	72	52	144
LSLRD(LC)	0	0	0	0	0	0	0	0	0	0	0	0	0	0	0	0	0	0	0	0	0	6	4	6	16
LGACNH (LC)	0	0	0	0	0	0	0	0	0	0	0	0	0	0	0	0	0	0	0	0	0	4	0	0	4
LGSLR	0	0	0	0	0	0	0	0	0	0	0	0	0	0	0	0	0	0	0	0	0	3	24	10	37
LGACWNAC(LC)	0	0	0	0	0	0	0	0	0	0	0	0	0	0	0	0	0	0	0	0	0	4	1	0	5
FAC (LC)	0	0	0	0	0	0	0	0	0	0	0	0	0	0	0	0	0	0	0	0	0	0	10	16	26
ACCN (LC)	0	0	0	0	0	0	0	0	0	0	0	0	0	0	0	0	0	0	0	0	0	0	40	30	70
ACCW (LC)	0	0	0	0	0	0	0	0	0	0	0	0	0	0	0	0	0	0	0	0	0	0	13	21	34
WCB (LC)	0	0	0	0	0	0	0	0	0	0	0	0	0	0	0	0	0	0	0	0	0	0	8	8	16
RDSO	0	0	0	0	0	0	0	0	0	0	0	0	0	0	0	0	0	0	0	0	0	3	0	0	3
RDSO TRC	0	0	0	0	0	0	0	0	0	0	0	0	0	0	0	3	0	0	0	0	0	**0**	**0**	**0**	3
RDSO GS CW	0	0	0	0	0	0	0	0	0	0	0	0	0	0	0	0	0	0	1	0	0	0	0	0	1
RDSO SLR CW	0	0	0	0	0	0	0	0	0	0	0	0	0	0	0	0	0	0	1	0	0	0	0	0	1
RDSO Track Rrecording Car	0	0	0	0	0	0	0	0	0	0	0	0	0	0	0	0	0	0	0	0	2	0	0	0	2
RDSO Staff Car	0	0	0	0	0	0	0	0	0	0	0	0	0	0	0	0	0	0	0	0	1	0	0	0	1
SG ACCN MOD	0	0	0	0	0	0	0	0	0	0	0	0	0	0	12	0	0	0	0	0	0	0	0	0	12
SG ACCW /MOD	0	0	0	0	0	0	0	0	0	0	0	0	0	0	4	0	0	0	0	0	0	0	0	0	4
CONT. CONCOR	0	0	0	0	0	0	0	268	62	201	0	0	0	0	0	0	0	0	0	0	0	0	0	0	531
VNR BOGIE	0	0	0	0	0	0	0	0	0	0	0	0	0	72	0	0	0	0	0	0	0	0	0	0	72
DRDO LCC	0	0	0	0	0	0	0	0	0	0	0	2	0	0	0	0	0	2	0	0	0	0	0	0	4
DRDO SSC	0	0	0	0	0	0	0	0	0	0	0	2	0	0	0	0	0	2	0	0	0	0	0	0	4
DRDO PSC	0	0	0	0	0	0	0	0	0	0	0	2	0	0	0	0	0	2	0	0	0	0	0	0	4
POSTAL VAN	0	0	0	0	0	0	0	0	0	0	0	0	28	0	0	0	0	25	0	0	0	0	0	0	53
MG UPPER DAY (MYANMAR)	0	0	0	0	0	0	0	0	0	0	0	0	0	0	0	0	0	0	12	0	0	0	0	0	12
MG ORD. DAY (MYANMAR)	0	0	0	0	0	0	0	0	0	0	0	0	0	0	0	0	0	0	22	0	0	0	0	0	22
MG GUARD CUM BREAK VAN (MYANMAR)	0	0	0	0	0	0	0	0	0	0	0	0	0	0	0	0	0	0	2	0	0	0	0	0	2
AC 2T DEFENCE	0	0	0	0	0	0	0	0	0	0	0	0	0	0	0	0	0	0	11	0	0	0	0	0	11
AC 3T DEFENCE	0	0	0	0	0	0	0	0	0	0	0	0	0	0	0	0	0	0	21	0	0	0	0	0	21
MG PTB SENEGAL	0	0	0	0	0	0	0	0	0	0	0	0	0	0	0	0	0	0	0	20	0	0	0	0	20
MG ORD. CHAIR CAR/SG (SENEGAL & MALI)	0	0	0	0	0	0	0	0	0	0	0	0	0	0	0	0	0	0	0	10	0	0	0	0	10
MG ORD. CC/EOG (SENEGAL & MALI)	0	0	0	0	0	0	0	0	0	0	0	0	0	0	0	0	0	0	0	16	0	0	0	0	16
First AC Chair Car (Senegal & Mali)	0	0	0	0	0	0	0	0	0	0	0	0	0	0	0	0	0	0	0	0	5	0	0	0	5
AC Sleeper/EOG (Senegal & Mali)	0	0	0	0	0	0	0	0	0	0	0	0	0	0	0	0	0	0	0	0	3	0	0	0	3
AC Restaurant Cum Bar/EOG(Senegal & Mali)	0	0	0	0	0	0	0	0	0	0	0	0	0	0	0	0	0	0	0	0	3	0	0	0	3
Power Car(Senegal & Mali)	0	0	0	0	0	0	0	0	0	0	0	0	0	0	0	0	0	0	0	0	3	0	0	0	3
Luggage guard Brake Van/SG(Senegal & Mali)	0	0	0	0	0	0	0	0	0	0	0	0	0	0	0	0	0	0	0	0	4	0	0	0	4

COACH TYPE	87-88	88-89	89-90	90-91	91-92	92-93	93-94	94-95	95-96	96-97	97-98	98-99	99-00	00-01	01-02	02-03	03-04	04-05	05-06	06-07	07-08	08-09	09-10	10-11	Total
Luggage Guard Brake Van/EOG(Senegal & Mali)	0	0	0	0	0	0	0	0	0	0	0	0	0	0	0	0	0	0	0	0	6	0	0	0	6
BG AC (ICF W/o FUR) (Deptt. Of Sc. & Tech.)	0	0	0	0	0	0	0	0	0	0	0	0	0	0	0	0	0	0	0	0	13	0	0	0	13
BG AC 3T (ICF/EOG) (Deptt. Of Sc. & Tech.)	0	0	0	0	0	0	0	0	0	0	0	0	0	0	0	0	0	0	0	0	1	0	0	0	1
BG Power Car(ICF) (Deptt. Of Sc. & Tech.)	0	0	0	0	0	0	0	0	0	0	0	0	0	0	0	0	0	0	0	0	2	0	0	0	2
MG-AC Chair car (EOG)(w/o Bogie)	0	0	0	0	0	0	0	0	0	0	0	0	0	0	0	0	0	0	0	0	0	2	0	0	2
MG-NAC Chair car (EOG)(w/o Bogie)	0	0	0	0	0	0	0	0	0	0	0	0	0	0	0	0	0	0	0	0	0	3	0	0	3
SLR (SG) (w/o Bogie)	0	0	0	0	0	0	0	0	0	0	0	0	0	0	0	0	0	0	0	0	0	1	0	0	1
SLR (EOG) (w/o Bogie)	0	0	0	0	0	0	0	0	0	0	0	0	0	0	0	0	0	0	0	0	0	1	0	0	1
MGDPC AC	0	0	0	0	0	0	0	0	0	0	0	0	0	0	0	0	0	0	0	0	0	0	0	6	6
MG TC NON AC	0	0	0	0	0	0	0	0	0	0	0	0	0	0	0	0	0	0	0	0	0	0	0	8	8
BG SCN (CW)	0	0	0	0	0	0	0	0	0	0	0	0	0	0	0	0	0	0	0	0	0	0	0	2	2
G.TOTAL	**1**	**120**	**175**	**600**	**915**	**1115**	**1025**	**1043**	**752**	**1121**	**1031**	**1087**	**1182**	**1262**	**1204**	**944**	**1201**	**1201**	**1263**	**1319**	**1480**	**1558**	**1506**	**1566**	**24671**

BALANCE SHEET

(Figures in unit of Rs.)

LIABILITIES						ASSETS					
PARTICULARS		BALANCE				PARTICULARS		BALANCE			
		As on 31st March 2010		As on 31st March 2011				As on 31st March 2010		As on 31st March 2011	
		DETAILS	TOTAL	DETAILS	TOTAL			DETAILS	TOTAL	DETAILS	TOTAL
1		2	3	4	5	6		7	8	9	10
1	Total Investment as in the Statement of Block Account	0	11718516639	0	12041145895	1	Fixed & Floating Assets as in the Statement of Block Account	0	11718516639	0	12041145895
2	Sundry Creditors :-					2	Cash in hand (Imprest)	0	1819600	0	1846500
A.	Provident & Other Funds :-					3	Sundry Debtors :-				
I)	General Provident Fund	0		0		A					
ii)	State Rly. Provident Fund Contb. (New Pension Scheme)	0		0		I)	F- Loans & Advances to Rly. Employees & Passage Advances	0	86760444	0	83437534
iii)	State Rly. Provident fund Non-contributory	1557985927		1858970630		ii)	Other Departmental Advances	0	121970	0	4730
iv)	Indian Rly. Conference Association Employees Provident Fund	0		0		iii)	Advance to Port & Coustoms Authorities	0	0	0	
v)	Contributory (Transferred) Rly. Personnel Provident Fund	0		0		iv)	Advances to Railwaymen's Consumers Co-op Societies	0	0	0	
vi)	Non - Contributory (Transferred) Rly. Personnel Provident Fund	0		0		v)	Advances to the Family of the Deceased who died in service	0	0	0	

1		2	3	4	5	6		7	8	9	10
vii)	Savings Provident Fund Railways	0		0		B.	Traffic A/c & Other Rlys.	0	0	0	
viii)	Staff Benefit Fund.	533752		271827		C.	Misc. Advance/Revenue.	0	0	0	
ix)	Misc. Provident Fund contributory	0		0		D.	Sundry Deposits with Central				
x)	Misc. Provident Fund non-contributory	0		0			Govt. (vide Item 2(b) Per contra).	0	439842349	0	647674686
	Sub Total		**1558519681**		**1859242461**	4	Investments :-				
B.	Misc. Deposits :-					a)	Indian Railways Conference Association Provident Fund	0	0	0	
I)	Security Deposits of Subordinates	0		0		b)	Staff Benefit Fund.	0	0	0	
ii)	Security Deposits of Contractors & Others	260693601		418463813		5	Savings Bank Account with Govt. (Vide item 2(a), 3 & 4(I) per contra less item 4 above.	0	10496896853	0	11564128252
iii)	Contribution for works done for Private persons and Public Bodies	0		0		6	Reserve Fund Investment Account (Vide item 4(ii)per Contra)	0	0	0	0
iv)	Unpaid Wages	285736		323105		7 a)	Accounts with states.	0	0	0	
v)	Sums Due to Contractors.	0		0		b)	Accounts with central Govt./ Civil	0	0	0	
vi)	Net earning of working lines.	0		0		8	Account with the Govt.of Pakistan Railways.	0	0	0	
vii)	Misc.	0		0		9	Account with the Govt.of Pakistan/Civil.	0	0	0	

1		2	3	4	5	6		7	8	9	10
viii)	Capital Deposited by Branchline companies	0		0		10	Adjusting Account with Posts & Telegraphs.	0	0	0	
ix)	Trust Interest Account.	0		0		11	Adjusting Account with Defence.	0	0	0	
x)	Accounts with Reserve Bank	0		0		12	Account with the Govt.of Bangladesh.	0	0	0	
xi)	Remittance into Bank.	-5326546		-6530745		13	Balance in transfer.	0	0	0	
xii)	Cheques & Bills.	124683994		175516076		14	Loss	0	0	0	
xiii)	Other Deposits-Company's Outstanding liabilities of F.Rly.	0		0							
xiv)	P.A.O.Suspense.	0		0							
	P.S.B. Suspense.	59505564		59902429							
xv)	Fine Forfeiture Account.	0		0							
xvi)	Payment on a/c of SRPF/CPF in advance of cash credits to be recovered from Pakistan	0		0							
xvii)	Pmt. on behalf of Central Claims Organisation Pension & PF	0		0							
xviii)	Decretal court deposits.	0		0							
xix)	Other Transactions	0		0							
xx)	Addl. DA Deposit Susp. A/c.	0		0							

1		2	3	4	5	6		7	8	9	10
xxi)	Addl. Wages Deposit Susp. A/c.	0		0							
xxii)	Unclaimed PF deposits	0		0							
xxiii)	A.G. Suspense account.	0		0							
xxiv)	Rly. Emp.Insurance Scheme	0		0							
xxv)	Central Govt. GIS	0		0							
xxvi)	Demands Payable.	0		0							
	Sub Total		**439842353**		**647674686**						
3. I)	Depreciation Reserve Fund.	5870906839		6290198064							
ii)	Rly. Development Fund.	0		0							
iii)	Railway Pension Fund.	3067470333		3414687727							
iv)	ACS&PA Fund	0		0							
	Sub Total		**8938377172**		**9704885791**						
4	Revenue Reserve Fund :-										
I)	Cash Balance	0		0							
ii)	Investment	0		0							
5. I)	Balance due to Central Govt. for loans and advances to Rly. Employees etc. (vide item3(a)(i) per contra)	86760444		83437534							

1		2	3	4	5	6		7	8	9	10
ii)	Other Advances (vide item 3(a) ii) per contra)	121970		4730							
iii)	Adv. to Port & customs Authorities vide item 3(a) (v) per contra)	0		0							
iv)	Advances to Railwaymens Consumers Co-op Societies (vide item 3 (a) (iv) per contra)	0		0							
v)	Advances to Families of the deceased who died in service (vide 3 (a) (v) per contra)	0		0							
	Sub Total		**86882416**		**83442268**						
6	Balances in transfer	0		0							
7	Balance of Amount in Account with Govt. Etc.		1819600		1846500						
8	Profit	0		0							
	GRAND TOTAL		**22743957861**		**24338237601**				**22743957871**		**24338237617**

Certified that the figures given in the balance sheet against each head agree with those reflected in the Final Accounts Current.

CIVIL ENGINEERING

1.0 GENERAL

1.1 RCF complex at Hussainpur is spread over 1178 acres of land out of which Workshop is over 340 acres and township covers the remaining 838 acres. Workshop comprises of approx. 2.4 lakh sqm covered structures. There are 3781 staff quarters (at Hussainpur alone) of various types and several service buildings both in workshop and township areas. Besides, there are several community facilities such as shopping complex, schools, separate clubs for workers, supervisors and officers. Total book value of Civil Engg. assets is Rs.206.08 crore (approx.) as on 31.03.2011.

1.1 Every nook & corner of campus is planted with evergreen and fruit trees which count more than 1.7 lakh. A green cover of 55% is maintained in whole of the campus. The concerted efforts of Civil Engg. Deptt. manifest in the form of lush green foliage cover of well trimmed blades of grass & dark tree line over RCF.

1.2 RCF has a wonderful 18 holes golf course which is maintained in extremely good condition comparable with any other golf course of national fame. Many golfers of national and international reputation have availed/availing of this rare facility.

1.3 RCF became the first unit in India in July 1999 to get ISO-14001 certification for workshop & township. The validity of this certification has been extended by certifying agencies from time to time. Emphasis is given on conservation of natural resources. Treated effluent (about 15%) from Sewage Treatment Plant is utilized for irrigation purposes.

1.4 Assets are maintained regularly on planned basis with minimum departmental labour. General sanitation & horticulture activities are done through contractual agencies besides other civil maintenance work & special works. All-out efforts of Civil Engg. Deptt. are aimed at timely, regular and economical maintenance of all structures. Every endeavor is made to maintain pollution free environment so that the employees could work with great enthusiasm & devotion to achieve the laid down objectives and targets with pleasant feeling of being environment friendly Production Unit of Indian Railways.

1.5 Pre-cast RCC units for high walls & columns, have been used in most of the shops in Workshop. The trusses are light weight skin stressed. Double roof sheeting and large window openings with adjustable water cooled louvers have been provided to reduce the effect of heat in summer. Skylights have been provided in roofs to facilitate day light and conserve electricity. Of late, galvalume corrugated/trough sheets are being used as covering in sheds. Eco-friendly material such as phenol bonded bamboo sheets are also used in small shelters (bus shelters).

2.0 ORGANISATION

2.1 Civil Engineering Department is headed by Chief Engineer who is assisted by two Dy.CEs, three XENs and two AXENs

There are 15 SSE/SE (W) and 12 JEs to assist the officers to maintain the assets and to undertake special works.

2.2 Staff Status

The status of sanctioned strength, on roll and vacancies of staff in various categories is detailed as under:

Category		Sanctioned Strength	On Roll	Vacancies
Officers		06+2 (WC)	08	--
Group 'C'	Supervisor	27+6(WC)	27	06
	Ministerial	25+1(WA)	25	01
	Artisan	135	137	(-)02
Group 'D'		172	153	19
Safaiwala		33	05	28
Total		**407**	**355**	54 (-) 02

3.0 MAIN FEATURES

3.1 Water Supply

Requirement of water supply in colony as well as in workshop is met through 200mm dia deep (180 m to 200 m) tube-wells having enough yield. There are 13 tubewells in colony and 04 tubewells in workshop. Water from the tube wells is pumped to over head tanks. Total capacity of these over head tanks is 11.5 lakh gallons (5175 kl). Individual capacity and location of these over head tanks is as under:

Tank No.	Location of water tanks	Capacity of water tank
OHT-1.	Near Type-IV S/S	2 lakh gallons
OHT-2.	Near Ram Lila ground	2 lakh gallons
OHT-3.	Near Type-I Qtrs.	3 lakh gallons
OHT-4.	West Colony	0.5 lakh gallons
OHT-5.	Workshop	3 lakh gallons
OHT-6	West Colony	1 lakh gallons

Total length of main water pipe line in Township is 22.98 km. and in Workshop 14.79 km.

Average daily requirement of water is about 13,000 kl (9,800 kl for Township and 3,200 kl for Workshop). However, the requirement jumps to 15,000 kl in summer.

An effort has been made to reduce consumption of ground water by supplying treated effluent for irrigation of various lawns in Workshop, Parkland, service buildings, playgrounds and Type-IV & V quarters. 9-10% saving in water consumption has been achieved during the year by using treated effluent water.

3.2 Rain Water Harvesting

Water requirement of RCF is met through ground water. With the passage of time the water table is depleting. The decreasing water table is a matter of concern and to tackle the problem of water table depletion, RCF started Rain water harvesting in the year 2007-08. Initially 13 Nos. Rain Water Harvesting (RWH) pits (11 in TS area and 02 in WS area) were constructed. Vertical bores (500-600mm dia) of 50-60m depth have been driven and 200-300mm PVC pipes have been lowered. In the impervious strata, blind pipes and in the pervious strata perforated pipes have been driven. The collection chamber is constructed around the bore and general dimensions of chamber is 4m x 3m x 3m (depth). The collection chamber is filled with recommended filtering media so that the rain water enters the bore after removal of floating particles, silt etc. The collection chamber is designed to cater runoff of approx. 2000 sqm area.

In the year 2010-11 and 2011-12, 34 Nos. additional RWH pits have been constructed and 10 more RWH pits will be constructed by the Dec. 2011 (Thus 47 Nos. of RWH pits will be available in RCF to recharge the ground water by the end of Dec., 2011). As per the statistics of the Indian Meteorological Deptt., the annual rain fall during the year 2008, 2009 & 2010 has been 712mm, 756mm & 416mm respectively. In this area, the average rain fall in Kapurthala region is around 650mm per annum. These RWH pits are capable to absorb/percolate the run-off of 94000 sqm (approx) area on daily basis.

It is pertinent to mention that after introduction of Rain Water harvesting scheme in RCF, the water table has improved in the last two years as shown in the table below:-

Reading on date	**Bore hole No. 2 near Type-IV & V**	**Bore hole No.9 Near Type-I & II**	**Bore hole No. 15 in West Colony area**
Sep-2010	24.38 m	25.90 m	23.47 m
Mar-2011	21.64 m	21.64 m	21.94 m

The result are quite exhilarating.

In RCF new quarters are being constructed in West Colony area and the storm sewer line laid for new quarters is connected with RWH pits, so that maximum of run off is percolated into ground for re-charging of ground water.

3.3 Fire Fighting Arrangements

Sufficient fire hydrants at strategic points in the Workshop and Township are installed to meet any emergency.

There are 09 under ground static tanks for fire fighting in the Workshop as per details as under:

SN	Location	Capacity
1.	Near Fire Station	826 kl
2.	Near Sub-station No.07	1100 kl
3.	Near Gas godown CO_2	791 kl
4.	Near SOS6	830 kl
5.	Opposite Machine Shop	414 kl
6.	Near AXEN/WS office	30 kl
7.	Near LPG Yard	30 kl
8	Near scrap yard	30 kl
9	Near Gate no.05	30 kl

3.4 Sewerage

Sewerage is separate from storm water drains. The sewage is carried to sewage treatment plant (7500 kl per day capacity) on the South-West side of colony. This is being regularly inspected by Punjab Pollution Control Board and Audit teams of ISO-14001. After treating the sewage effluent to the requisite standard, the treated effluent is being used for irrigation and flooding the jungle/ plantation . The details of sewers are as under.

S. No.	Description	Length	
		Workshop	Township
1.	S.W. pipe 8” dia	1829 m	18757 m
2.	S.W. pipe 10” dia	1182 m	1465 m
3.	S.W. pipe 12” dia	936 m	3100 m
4.	S.W. pipe 16” dia	105 m	---
5.	Brick sewer 30”dia	208 m	3784 m
Total		**4260 m**	**27106 m**

3.5 Drainage/Storm Sewer

Entire RCF complex has a well planned under ground drainage system which ultimately discharges into BEIN NADI. The roads, generally have been constructed in cutting which also carry out the rain water quickly through side drains to under ground drainage. Storm sewers are regularly cleaned before the onset of monsoons. The details of storm sewer lines are as under:

SN	**Description**	**Length**	
		Workshop	**Township**
1	RCC pipe line 8” dia	615 m	---
2	RCC pipe line 12” dia	---	11477 m
3	RCC pipe line 18” dia	1072 m	918 m
4	Brick sewer 24” dia	2791 m	171 m
5	Brick sewer 30” dia	---	242 m
6	Brick sewer 36” dia	1022 m	1407 m
7	Brick sewer 42” dia	---	337 m
8	Brick sewer 48” dia	444 m	395 m
9	Brick sewer 60” dia	---	529 m
10	Brick sewer 64” dia	---	184 m
11	Brick sewer 66” dia	---	1639 m
	Total	**5944m**	**17299 m**

3.6 The details of other salient features of Civil Engineering Department of RCF are as under

3.6.1 Land

Area 1178 acres
Book Value per acre Rs. 0.30 lakh
Present Value per acre Rs.10.00 lakh (app.)

3.6.2 Boundary Wall (km)

(i) Brick Wall

Township 7.041
Workshop 1.170
Total 8.211

(ii) Weld Mesh Fencing (km)

Township 3.350
Workshop
Single 1.170
Double 5.760
Total 10.280

3.6.3 Residential Accommodation

Type	HSQ	KXH	JUC	SOJ/ NDLS	TOTAL
Type-I	1111	---	04	---	1115
Type-II	1840	---	08	---	1848
Type-III	375	---	---	08	383
Type-IV DS	248	---	---	04	252
Type-IV SS	80	---	---	---	80
Type-V+GM Bungalow	76	---	---	04	80
Non Standard	51	61	07	---	119
Transit Flat	---	---	---	08	08
Total	**3781**	**61**	**19**	**24**	**3865**

3.6.4 Workshop Structures (sqm)

(i) Covered area =242657
(ii) Un-covered area =120270

3.6.5 Other Structures (sqm)

(i) Service Buildings =24657
(ii) Anc. Bldgs. In W/shop =28145

3.6.6 Welfare Buildings (sqm)

(i) Township 38402.33
(ii) Workshop 11324

3.6.7 Track

Description	Total
(i) Ballasted Track	=12.1 km
(ii) Embedded Track	=10.52 km
(iii) Point & Xings	=30 no.

3.6.8 Expenditure during financial year 2010- 11

(in Thousands of Rs.)

SN	Plan head	Allocation	Expenditure
1	4200	Cap	69656
2	4200	DRF	45632
3	4200 (charged)	Cap	00
4	5100	Cap	79096
5	5100	DRF	14123
6	5200	Cap	9216
7	5200	DRF	6449
8	6400	Cap	36384
	6400	DRF	1500
9	7200	WMS	64697
		Total	**326753**

4.0 MAJOR EVENTS OF THE YEAR 2009-10.

4.1 Visit of Minister of State (R) Rly. on 01.08.2009 successfully organized.

4.2 Visit of Member Mechanical, Railway Board on 17.11.09 successfully organized.

5.0 MAJOR WORKS COMPLETED DURING 2009-10

5.1 Workshop Area (including Admn. Bldg.)

SN	Description of work	App. Cost (In Rs. Lakh)	Month of completion
1.	Cosntruction fo two nos. underground water storage tank in WS area.	7.15	May-2010
2.	Replacement of damaged skylights & aluminum sheets in various non crane shops in critical location.	70.50	Sept.-2010
3.	Construction of sub station , near new paint shop.	30.56	Sept.-2010
4.	Providing and replacing of worn out khas in louvers of different shops	4.06	Oct.-2010
5.	Provision of AC cabins for LVD laser cutting, cut and strip machine.	33.48	Nov.-2010
6.	Replacement of existing gutter, rain water pipe and gutter outlets over roof of different shops.	13.09	Dec.-2010
7	Repair of flooring near WM/Paint office and filling pits in Bany no. 4 of SMS, near sheet treatment plant.	4.28	Mar-2011
8	Balance work of const.of Ind.shed of MEMU/METRO coaches	114.62	Mar-2011

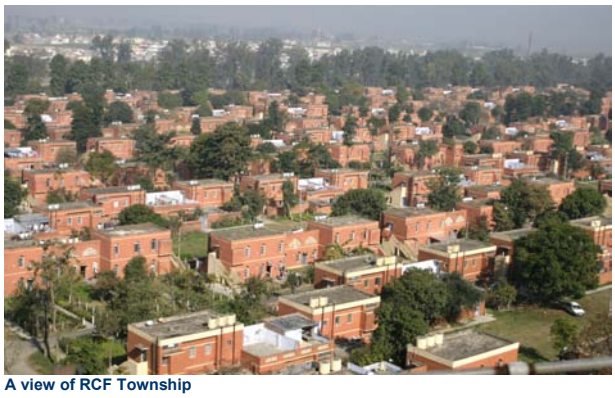

A view of RCF Township

5.2 Township Area

SN	Description of work	App. Cost (In Rs. Lakhs)	Month of completion
1.	Provision of over head tank and pumps for augumentation of water supply in township area.	221.40	April-2010
2.	Addition alteration in therft & credit Co-operative Sociecy office in RCF	1.39	April-2010
3.	Provision of PU (polyurethane) based synthetic custioned floring in basket ball court.	21.21	June-10
4.	Security fencing around basket ball court.	5.47	June-10
5.	Provision of shallow tubewell for RCF colony	1.99	June-10
6.	Repair of toilets and bathroom in subordinate rest house at Patni Hop	1.99	June-10
7	Provision of fabricated angle iron ladder for units D&E of Ty-I,II & III qtrs.	28.05	Junly-2010
8	Construction of court yard, boundary wall & court yard flooring in Type-V qtrs.	40.91	July-2010
9	P&F Anglo Indian sheet in Ty-V & IV qtrs. in TS area.	3.00	July-2010
10	Provision of wire gauge shutter in Ty-I&II qtrs, in TS area.	60.02	Aug.-2010
11.	Construction of VIP gallery, spectator gallery, changing room, other misc.work in Hockey Ground in RCF	277.47	Aug.2010
12.	Provision of open shed, extension of gymnasium renovation of toliets in supervisor club.	57.00	Nov.2010
13.	Spl.repair with addition, alteration at JUC Rest House, Jalandhar.		March.2011
14.	Construction of TT hall & renovation of supervisory club.	58.50	March 2011
15.	Addtions, alterations special repair at SOJ colony	10.62	March 2011
16.	Construction of 20 units Ty-III qtrs.in RCF	140.38	May 2011
17.	Construction of pathway in Ty-I,II&III qtrs.	85.58	Nov.2010
18.	Construction of pathway in Type-IV & V qtrs.	18.97	May 2010

A view of lush green lane of RCF township

PERSONNEL

1.0 STAFF STRENGTH

The staff strength as on 31.03.2011 compared with the previous year i.e. 31.03.2010 is given below:-

CATEGORY	AS ON 31.03.2010		AS ON 31.03.2011	
	SANCTION	ACTUAL	SANCTION	ACTUAL
GROUP –A	74	71	76	72
GROUP-B	115	94	101	91
GROUP-C (OTHER THAN WORKSHOP)	2042	1743	2043	1690
WORKSHOP	4793	4149	4793	4334
GROUP-D (OTHER THAN WORKSHOP)	694	646	694	651
WORKSHOP	579	958	579	807
TOTAL	8297	7661	8286	7645

2.0 GAZETTED POSTS

The details of work charged/temporary posts created during the year 2010-11 is as under:-

(a) Work Charge Posts

S. No.	Department	Grade	Currency upto
1	Mechanical	SAG/Mech (12600)	30-06-2011
2	Mechanical	SAG/Mech (PC 12665)	30-06-2011
3	Mechanical	JAG	31-12-2011
4	Mechanical	JAG	31-12-2011
5	Mechanical	JAG	31-12-2011
6	Mechanical	JAG	31-07-2011
7	Mechanical	JAG	31-12-2011
8	Mechanical	Sr. Scale	31-12-2011
9	Mechanical	Sr. Scale	31-12-2011
10	Mechanical	Sr. Scale	31-12-2011
11	M&C	JAG	31-12-2011
12	Personnel	Sr. Scale	31-12-2011
13	Electrical	Sr. Scale	31-12-2011
14	Stores	Sr. Scale	31-03-2011
15	Stores	Sr. Scale	31-12-2011
16	Stores	Sr. Scale	31-12-2011
17	Stores	Sr. Scale	31-12-2011
18	Stores	Sr. Scale	31-12-2011
19	Stores	Sr. Scale	31-12-2011
20	Civil	JAG	31-12-2011
21	Civil	Sr. Scale	31-12-2011

3.0 APPOINTMENT IN GROUP C & D AGAINST VARIOUS QUOTAS

The details of appointments on various quotas during the year is as under:-

Sr. No.	CATEGORY	DURING 2009-10			DURING 2010-11		
		Gr-C	Gr-D	Total	Gr-C	Gr-D	Total
1	Compa-ssionate Grounds	5	5	10	7	10	17
2	Sports Quota	5	--	5	7		7
3	Ex-Service-men Quota	--	--	--	4	2	6
4	Physical Handica-pped Quota	--	--	--	--	--	--
5	Crash program-me for wiping out shortfall of SC/ST	--	--	--	--	ST-03	ST-3
6	Casual Labour absorbed	--	--	--	--	--	--
7	No. of Staff Recquit-ed Scout/ Cultural Quota	2		2	--	--	--
8	Sub.,Act App., B/kh.	–	42	42	-	B.kh/14 Sub/50	64
	Total	12	47	59	18	79	97

4.0 THE PAYMENT OF SETTLEMENT DUES DURING THE YEAR 2010-11

Sr. No	Nature of Settlement	No. of Cases Received	No. of Cases Settled	Balance Cases
1	Superannuation	78	78	NIL
2	Voluntary Retirement	14	13	1- Out of India
3	Compulsory Retired	2	2	NIL
4	Resignation	6	6	NIL
5	Removal & Dismissal	4	4	NIL
6	Medical Unfit Cases	1	1	NIL
7	Death Cases	18	18	NIL
	Total	123	122	NIL

5.0 PROMOTIONS

During the year selections, suitabilities & Trade Test were conducted and 161 staff had been promoted as detailed here under:-

S No.	SECTIONNAME OF THE	NO. OF SELECTION / SUITABLITY HELD DURING THE YEAR 2010-11.	NO. OF TRADE T. TEST/ SUITABILITY HELD DURING THE YEAR 2010-11	NO. OF STAFF PROMOTED DURING THE YEAR 2010-11
1	SUP. SECTION	25	--	78
2	MIN. SECTION	3	6	21
3	TECH. SECTION	4	80	481
4	CL-IV SECTION	NIL	NIL	NIL

6.0 VIP REFERENCES

Eighteen VIP References were received from Railway Board/MPs/MLAs during the year 2010-11. All these references have been replied.

7.0 GROUP INCENTIVE SCHEME

During the year 2010-11, the following Incentive, Supervisory Allowance and PCO Allowance has been paid to Group-C & D staff of RCF:-

Incentive : Rs. 47,09,27,208/-
Sup.Allowance : Rs.1,20,67,680/-
PCO Allowance : Rs.32,93,380/-

8.0 BONUS

In the year 2010-11, 7634 Group –C & Group –D staff of RCF have been paid productivity linked bonus amounting to Rs. 6,66,47,720/-.

PRODUCTIVITY LINKED BONUS PAID	NO. OF EMPLOYEES
Rs. 6,66,47,720	7634

9.0 DISBURSEMENT OF ADVANCES AS ON 31.03.2011

Following advances on various accounts had been disbursed during the year 2010-11 as under :-

HEADS	FUND ALLOTED(Rs.)	FUND PAID(Rs.)	FUND BALANCE	STAFF COVEREDNO. OF OFFICERS/
HBA	1,09,49,000	1,09,49,000	NIL	29
M.CAR.	5,00,,000	5,00,000	NIL	3
COMPUTER	7,50,000	7,50,000	NIL	25
M.CYCLE/ SCOOTER	57,38,000	57,38,000	NIL	203
CYCLE	91,000	90,000	1,000	30
TOTAL	1,80,28,000	1,80,27,000	1,000	290

10.0 WELFARE OF SCs/STs

Recruitment of SC/ST/OBC and promotion of SC/ST/OBC candidates have been made as per extant rules.

The recruitment and promotions made during the year 2010-11 are as under:-

a) Promotions

GROUP	TOTAL EMPLOYEES PROMOTED	PROMOTED SC	PROMOTED ST	PROMOTED OBC
GR-C	470	188	26	3
GR-D	---	--	--	--

b) Recruitments

GROUP	TOTAL EMPLOYEES RECRUITED	RECRUITED SC	RECRUITEDST	OBC RECRUITED
GR-C	83	31	9	32
GR-D	69	25	1	5

11.0 PENSION ADALAT OF RETIRED RAILWAY EMPLOYEES

A Pension Adalat was arranged on 15.12.2010 for retired Railway employees. No representation was received during this Pension Adalat.

12.0 STAFF WELFARE

12.1 Quarters

RCF has a well laid out modern colony having 3757 quarters with all around greenery & healthy atmosphere .

Number of quarter of each type allotted to the employees and No. of allotted belonging to SC/ST communities are given below:-

Type of Quarter	Total No. of Qtrs.	Occupied		%age	
		SC	ST	SC	ST
I	1007	285	74	28.30	7.34
II	1848	460	38	24.89	2.05
III	363	78	6	20.36	1.51
IV	252	54	2	21.42	0.79
IV(SPL)	80	16	3	20.00	3.75
V	79	24	6	30.37	7.59
GM Bangalow	1	-	-	-	-
Sub. Standard Quarters	119+ 8	23	4	18.11	3.14
Total	3757	940	133	24.88	3.52

12.2 Staff Benefit Fund

The Staff Benefit Fund Committee continued to function effectively and satisfactorily. Brief particulars of disbursements made for various objectives are as under:-

Education of children/ wards of staff	Rs.24,09,600
Education of female Children of Group- "D" Staff	Rs.2.20,800
Recreation other than sports	Rs.1,50,000
Relief in distress under Scheme of Sickness	Rs.1,55,000
Miscellaneous	Rs.7254
Women Empowerment Activities	Rs.1,68,000
Recreational facilities to Officers Club	Rs.75,000
Recreational facilities to Supervisors Institute	Rs.1,00,000
Recreational facilities to Workers Institute	Rs.1,50,000
Indigenous system of Medicines including Homeopathic	Rs.73,086
Financial help to Physically & Mentally Challenged Children	Rs.1,54,000
Total	Rs.36,62,740

12.3 Canteen

One modern and well equipped statutory Staff Canteen has been established in workshop area, which caters to the needs of more than 7000 employees, in supplying Tea/Snacks/Cold-drinks and meals(lunch) etc. It has a seating capacity of 1200. One small canteen in Administrative block is also supplying samosas, tea, coffee, soup and cold drinks to the staff working in Administrative Block.

Staff Canteen

12.4 Schools

Seven schools are functioning in RCF Township. Three schools (Senior Secondary School, Govt. Middle School and Primary School) are being run by Educational Department of Punjab Govt. Two Central Schools are being run by Kendriya Vidhyalaya Sangathan. Jack 'N' Jill School (Sr. &

Jr. wing) are being run by RCF WWO. About 2983 children are making use of the educational facilities available in the above Seven Schools.

12.5 Karamchari Kalyan Kosh_

To provide immediate financial help to the family of employees who die in service, a scheme has been launched under the name of "KKK". In this scheme, all the staff including officers are covered in which immediate relief is provided to the grieved family. During the year 2010-11, 19 employees died and their dependents were paid Rs.10,73,500/- @ Rs. 56,500/- in each case .

12.6 Handicraft Centre_

A handicraft centre is being run in RCF by SBF Committee. In this center 28 candidates (ladies) have successfully completed their training in cutting, sewing and embroidery during 2010-11.

12.7 Staff Grievance Redressal Camps_

06 Staff Grievance Redressal Camps were organized from 28th July to 6th August 2010 in different shops and offices for redressing the day to day grievances of the staff. During these camps, 70 complaints were received and all redressed.

12.8 Staff Holiday Camp_

a) A Staff Holiday Camp for working women of RCF was arranged at Jodhpur and Jaisalmer from Staff Benefit Fund w.e.f. 22.01.2011 to 26.01.2011. In this camp 38 campers participated enthusiastically and enjoyed their holiday trip.

Women Employees in Holiday Camp

b) 75 Employees of RCF in their high spirits successfully attended the staff holiday camp organized from SBF w.e.f. 18.03.11 to 28.03.11 atGoa, TVC & Kanayakumari. All the participants enjoyed the tour very much.

Employees in Holiday Camp

13.0 WELFARE ACTIVITIES 2010-2011

13.1 Cultural Programmes

i) RCF Cultural Team of Dance/Bhangra performed a colourful cultural programme at WSSC, Central Railway Mumbai Division on 03 & 04 April 2010 on invitation of DRM/CR/Mumbai wherein GM/Central Rly. gave a award of Rs. 30,000/- to the RCF Bhangra team.

Bhagra presented by RCF Cultural Team

ii) A colourful cultural programme was organized on 15.04.10 by RCF Cultural Society at Waris Shah Hall during 55th Railway Week Awards Celebrations.

iii) Baisakhi Mela was organized by Shaheed Bhagat Singh Institute/RCF (Supervisor's Club) at Maharaja Ranjit Singh Stadium/RCF from 25.04.2010 to 27.04.2010 where in all types of shops, amusement parks and games etc were arranged. During these three days colourful cultural programmes were also arranged by RCF Cultural Society.

iv) A Colourful cultural Programme was organized on 26.05.2010 during the visit of MM/Railway. Board.

v) A Workshop was organized on Dramas from 28.5.10 to 30.5.10 at Waris Shah Hall. The aim of organizing this workshop was to inculcate & developing the healthy sprit of cultural talent among the staff & their wards.

vi) Diwali Mela was arranged by SASI (Worker's Club) w.e.f 27.10.10 to 29.10.10 wherein all type of stalls, amusement park and games were arranged. During the Mela colorful cultural programmes were staged by the employees & their wards.

vii) A colourful Cultural Programme was organized at Waris Shah Hall on 10.11.2010 during the celebration of Honour to Senior Citizens.

viii) In the Inter Railway Cultural Competition in Dance 2010 organized at Chennai by Southern Railway from 04.01.2010 to 06.01.2010, RCF Bhangra team secured *PRIZE* for best set in above said competition.

13.2 Adventure Events

RCF Trekkers and Explorer Association under the aegis of IMF successfully completed the following Trekking Expeditions:-

I) 23rd Trekking Expedition from Badrinath to Satopanth Tal w.e.f 17.5.10 to 30.05.10. 14

employees successfully completed the above expedition.

ii) 24th Trekking Expedition from Munsiari to Milam Glacier w.e.f 15.6.10 to 29.06.10. 10 employees actively participated & completed the Track.

iii) 25th Trekking Expedition from Bharmour to Trilokinath via Chobia pass from 2.07.10 to 11.07.10 .

Trekking Expedition

13.3 Scouts & Guides Activies

i) Water Service by Scouts & Guides during Summer Children Camp Organised by RCF/ WWO

A number of Scouts & Guides rendered their services to serve water to the participants in Summer Vacation Children Camp at Waris Shah Hall from 07.6.10 to 17.06.2010 which was organized by RCF/WWO.

Water services provided by RCF Bharat Scouts & Guides

ii) Four Rangers Participated in Parveen Level Testing Camp at Salogra

Four Rangers have actively participated in Parveen Level Testing Camp at Salogra w.e.f. 28.6.2010 to 02.07.2010.

iii) One Rover Selected for Rastrapati Testing Camp at Raiwala

One Rover from Pragti Group successfully underwent Rashtrapti Testing Camp at Raiwala w.e.f. 28.6.2010 to 02.07.2010.

iv) Three Rovers Participated in Nipun Testing Camp at Raiwala

Three Rovers actively participated in Nipun Testing Camp at Raiwala w.e.f. 28.6.2010 to 02.07.2010.

v) Two Scouts Participated in Rastrapati Scout Testing Camp at Raiwala

Two Scouts actively participated in Rashtrapti Scout Testing Camp at Raiwala w.e.f. 28.6.2010 to 02.07.2010.

vi) One Scout Participated in Rajya Puraskar Testing Camp at Raiwala

One Scout actively participated in Rajya Puraskar Testing Camp at Raiwala w.e.f. 28.6.2010 to 02.07.2010.

vii) Week End Camp for New Scouts

A weekend camp for newly enrolled 50 children was arranged from 17/7/10 to 18/7/10 at RCF Scout Den.

viii) Rashtrapati Awards

Eight Scouts, 01 Rover & 01 Ranger have been selected for Rashtrapati Award this year. Sh. Parveen Kumar Scouts and Km. Neha Joshi Ranger attended Rashtrapati National Rally at Gadpuri. Km. Neha Joshi got Rashtrapati Rangers Award from Hon'ble President of India on 14.7.2010 at Rashtrapati Bhavan, New Delhi.

President of India awarding Ranger from RCF

ix) Celebrations of Centenary Year of Guiding (13.08.10 to 30.08.10)

The following programmes were organized by RCF district during the celebrations of Centenary Year of Guiding as directed by State Head Quarter:-

a) Anti Polythene Campaign was arranged on 18.8.10 at both entrance gates of RCF by Scouts & Guides to bring awareness amongst the colony residents about the disadvantages & harm of Polythene and requested them to use cotton/juite bags.

b) Door to door campaign in RCF Township was arranged on 19.08.10 with the motto of Energy Conservation.

c) Sarab Dharam Prarthana was arranged at Scouts Den by the members of RCF BS&G on 20.08.10.

d) To keep the environment healthy in RCF, trees were planted by RCF BS&G on 21.08.10.

e) Two cleanliness service projects were arranged on 22.8.10 & 29.8.10 by RCF BS&G for cleanliness of the surroundings of Gurudwara Sahib and the surroundings of LLR Hospital.

f) Maa Bhagwati Jagran was organized by Shop Keepers in Shopping Centre on 29.8.10 wherein a

g) number of Rovers rendered their services which were appreciated by one and all. During the closing ceremony of Centenary Year of Guiding a

colourful cultural programme was arranged at Workers Club on 30.08.10. Distt.Chief Commissioner/RCF and officials from Ferozepur District also attended the same.

x) Services Rendered by RCF Scouts & Rovers

A number of Scouts and Rovers rendered their services during *Vishwakarma Puja* in RCF Workshop on 17.09.2010 and celebration of *Janam Ashtami* on 1.9.2010 at Sanatan Dharam Mandir RCF/KXH.

xi) Trek of Beaskund

Eight Rovers of RCF BS&G successfully completed their trek to Beas Kund at an altitude of 12000 ft w.e.f. 19th to 26th Oct,2010 in high spirits and good health.

xii). Vigilance Awareness Rally

Scouts & Guides of RCF actively participated in a rally on Vigilance Awareness arranged by Vigilance Department in RCF Campus on 27th Oct,2010.

xiii) Service During Diwali Mela

RCF Scouts & Rovers rendered their services during Diwali Mela organized at Sahibzada Ajit Singh Institute (Workers' Club) from 27th to 29th Oct,10

xiv) Service During of *Mahan Kirtan Darbar* and *Mass Marriages*

RCF Scouts and Rovers rendered their services during 18th Mahan Kirtan Darbar & Mass Marriages of 12 Girls belonging to poor families at Gurudwara Sahib/RCF from 30th to 31st Oct,10.

xv) Sarab Dharam Prarthana

A Sarab Dharam Prarthana was organized by RCF Scouts & Guides at Scouts Den on 20th Nov,2010.

xvi) Grand Camp Fire By RCF BS&G

Grand Camp Fire was organized on 25th Jan,2011 at Scouts Den by RCF BS&G wherein Craft Exhibition and colourful cultural programme was arranged. An award of Rs.10,000/- was announced by GM/RCF to RCF Scouts & Guides.

xvii) Service by Scouts & Guides during Independence Day and Republic Day

A number of Scouts & Guides rendered their services during Independence Day on 15.08.2010 and Republic Day Celebrations on 26.01.2011.

xvii) Participation of Rovers and Rangers in RCF district in Rover-Ranger Samagam at Daya Basti, New Delhi

Twenty one Rovers and Rangers of RCF BS&G actively participated in Rover-Ranger Samagam at Daya Basti, New Delhi organized by NHQ, New Delhi from 24.2.11 to 28.2.11.

xix) Service by Scouts & Guides during Pulse Polio Drive

A number of Scouts & Guides rendered their services during Pulse Polio Drive by LLR Hospital from 23.01.2011 to 27.01.2011 and 27.02.2011 to 01.03.2011.

14.0 ACTIVITIES UNDERTAKEN BY RCFWWO

Women's Welfare Organisation, RCF Kapurthala is a "non-profitable"social welfare organisation registered with Registrar of societies vide registration No. KPT/ARS/639 which started functioning in 1991. This organisation has been rendering selfless service to the RCF employees and their families in hour of need. A brief report on various activities undertaken from 01.04.2010 to 31.03.2011 is as under:-

14.1 Computer Centre

Under the aegis of RCFWWO, new job oriented computer courses i.e.Hardware,MS DOS WINDOW,MS Excel, Networking, GNPV-ii, Java etc. in the field of information technology were started by NIIT on 8th April 2010 in RCF computer centre. 102 students have completed their courses during the year out of which four students have got placement in reputed organisations.

IT Training Class in progress

14.2 Training for Squash making

A training camp for making Squash was organised on 21.04.2010 at Officers' Club in which experts from Krishi Vigyan Kendra, Kapurthala imparted training to WWO members for making squash.

14.3 Summer Camp

A summer camp was organised from 7th June to 18th June in RCF Campus in which singing, dance, yoga and handicraft were taught to the students . In this camp 158 students took part and got benefited.

14.4 *Alp-aahar* Centre

In view of increasing demand for south indian dishes in RCF township , on 26th June under the aegis of RCFWWO, a centre for south indian mini meal was opened. Smt. Shivani Handa Member, RWWCO/New Delhi inaugurated the centre.

14.5 Tree Plantation

As RCF has been awarded Golden Peacock Environment Management by World Environment Foundation and also bagged Greentech Environment Exellence Gold Award for maintaining its greenery, a tree plantation drive was launched on 21.07.2010 in which President along with all the members RCFWWO planted the trees at various places in RCF township.

14.6 Visit to Leprosy Centre

RCF WWO has been helping out inmates of leprosy centre, Kapurthala.On 22nd July President and Executive committee members, RCFWWO visited Leprosy centre where monetary donation, fruits, food items and clothes were donated.

14.7 *Teej* festival

In RCF, *Teej* Festival is celebrated with great fervour and style. Like every year, on 7th Aug *Teej* festival was celebrated in which all members of RCFWWO actively participated.

14.8 Independence Day celebration

RCF WWO visited LLR Hospital on Independence Day and distributed fruits and sweets to the indoor patients.

14.9 Drawing & Painting and Essay writing competitions

On the spot Drawing & Painting and Essay writing competitions were held on 5th Sep.and 12th Sep.in which 158 and 60 children participated respectively in three groups in each event .All the participating children were given small gifts and snack packets by President RCFWWO .

14.10 Teachers' Day celebration

As this year teachers' day fell on Sunday, so the celebration of teachers' day took place on 15th Sep. at RCF Officers Club. Sincere teachers and *Aayas* were awarded on the occasion.

14.11 Installation of water Cooler

RCF WWO has always come forward with helping hand in all times for the welfare of staff. On the demand of RCF staff, a water cooler was installed at RCF Shopping Complex for providing cold drinking water.

14.12 Honour to Sr. Citizens

In the honour of senior citizens of RCF township, a colourful cultural programme followed by lunch was arranged by Staff Benefit Fund Committee under the aegis of RCFWWO on 10.11.2010 in Waris Shah Hall wherein President, RCFWWO distributed gifts to the Senior Citizens. General Manager, RCF gave away prizes to children of RCF employees for their outstanding achievements in the field of academics, sports and cultural etc.

14.13 Presentation of Awards

On 19th Jan, 2011, President, RCFWWO presented special awards to 20 wards of RCF employees at Waris Shah Hall who were selected in IIT-JEE/AIEEE/PMT/AIPMT during 2009-10.

14.14 Prize distribution function

On 22nd Dec, 2010, President, RCFWWO gave away cash prizes to the wards of RCF employees who secured 1st, 2nd and 3rd positions in the On-the-spo' Drawing & Painting and Essay Writing competitions in three different age groups.

14.15 Republic Day celebration

President and all executive committee members of RCFWWO visited LLR Hospital on Republic day and distributed fruits and sweets to the indoor patients.

14.16 Visit of Creche by RCF WWO

A Creche is being run under aegis of RCF WWO since 2nd Apr 2003 to facilitate the working women to take care of their kids. On 28th Jan , President and other executive committee members visited the creche centre and distributed small toys and chocolates to tiny tots.

14.17 Farewell functions

On 25th Jan, 2011 and 26th Feb, 2011, Smt. Abha Kumar, President and Smt. Paramjit Vice President RCFWWO were given warm farewell respectively at RCF Officers Rest House by all members of RCFWWO followed by cultural programme on both the occasions.

Creche run by RCF WWO

MEDICAL

1.0 GENERAL

Lala Lajpat Rai Hospital is being operated as a 60 bedded hospital + 6 bedded ICU & 4 Cabins and serving about 7900 employees and 465 retired employees and their families. Medical Department of Rail Coach Factory, Kapurthala is headed by Chief medical Supdt. He is assisted by six Sr.DMOs, two DMOs, and one Contract Medical Practitioners. There are six specialists each in the field of Orthopedics, General Surgery, Anesthesiology, Physician, Chest Specialist and Gynecology. One part time Dental Surgeon and One Homeopath Doctor is also working in this Hospital. One Hospital Visiting Specialist in the field of Anesthesiology is also available.

There is one FIRST AID POST in the Workshop managed by One Chief Matron and three dressers round the clock.

Total Outdoor patients attended during the year	1,87,305
Average OPD per day	640(approx)
Total Indoor patients attended during the year	2479

a) Referral Hospitals on Panel of LLRH/RCF

The patients who require further specialized treatment are referred to Civil Hospital/Kapurthala, Sacred Heart Hospital, Vasal Hospital, Ghai Hospital at Jalandhar, CMC Hospital, Ludhiana and Central Hospital/New Delhi. Heart cases are referred to Tagore Hospital and BBC Heart Care Centre Jalandhar. Similarly, cancer cases are referred to Patel Hospital Jalandhar.

2.0 PARA MEDICAL STAFF

At present, working strength of Para Medical and Ministerial staff in LLR Hospital/RCF is 202 against the sanctioned strength of 221. This hospital is rendering medical services to about 30000 beneficiaries of RCF.

3.0 INVESTIGATIVE FACILITIES

3.1 Laboratory Investigations

This hospital is having well equipped laboratory and routine investigations like examination of blood, urine, stool, semen, sputum and other body fluids are conducted here. All routine biochemistry tests like Liver Function Tests, Kidney Function Tests, Lipid profile, Glucose Tolerance Test, Uric acid etc. and Serological tests such as HIV (1 & 2) , Hepatitis A, B & C, Rheumatoid Arthritis, Typhoid testing (Widal test), Venereal disease testing and whole range of Hematology tests are also being done including Peripheral blood smears for the diagnosis of type of anemia.

Dengue Serology test has been introduced for the first time in the Lab. State-of-art equipments for Blood Electrolyte Analysis and Hormonal Analysis such as Thyroid Function Test, Tumor Markers etc. have been installed in Laboratory to increase the spectrum of available diagnostic tests at LLR hospital.

During the year 2010-11, Lab. investigations /tests were done along with the description are as under:-

Hematology	-	36,386
Bio-chemistry	-	52,113
Urology	-	24,284
Serology	-	4,119
Clinical Pathology	-	1,339
Microbiological water testing	-	308
Total no. of tests	-	**1,18,549**

Early reporting system for the number of tests was started during the year. Days for blood sugar fasting & PP tests were enhanced from 1 day to 3 days in a week. New bilingual Reporting Format indicating normal range against almost all the investigations was also introduced which received appreciation from all corners.

3.2 Accreditation of Lab

External Quality Assessment Scheme has been implemented in the laboratory of LLR hospital and our laboratory results are being regularly assessed under WHO parameters through CMC Vellore. As per Participation Certificate and yearly summary received from CMC Vellore, our performance has been rated as **"GOOD".**

3.3 RNTCP Microscopy Centre

Under Revised National Tuberculosis Control Programme, we are running Microscopy Center in the Laboratory of LLR hospital for the examination of sputum for the diagnosis of Tuberculosis. Total 388 Sputum tests were conducted in respect of 230 patients and 13 patients were found positive.

3.4 X-Ray Department

There are 2 X-ray technicians manning 500 MA DX machine and 325 MAX machine. New 60 MA Portable Machine and C-arm Image Intensifier have been provided. A new dedicated Dental X-ray Unit has also been installed in Dental Dept.

Total no. of routine X-rays done in the year: 8761

3.5 Cardiac& Pulmonary Function Test Dept.

Three ECG machines and one computerized back-up ECG Machine are available, which are operated by a technician and trained nursing staff. The facility is available round the clock. The advanced facilities like TMT, Holter, Audiometry and Spirometry have also been made available and for these investigations and now patients need not go to Jalandhar.

Total no. of ECG done during the year : 3012

Total TMTs done	:	103
Total Holter test	:	22
Total Audiometry tests done	:	366
Total Spirometry tests done upto	:	261

4.0 THERAPEUTIC FACILITIES

4.1 Operation Theatre & General Surgery Deptt

Two well equipped air conditioned major operation theatres and one minor operation theatre are functional. Basic and advanced Laparoscopic surgeries like Laparoscopic Cholecystectomy,

Appendectomy, Laparoscopic Ventral Hernia and Inguinal Hernia repair are being done under Minimal Access Surgery Dept. Besides routine general surgeries, operations like Thyrodectomy, Exp. Laparotomy etc., Endourology operations like internal Uretheretomy, Dormia basketing etc. and cancer surgery like Modified radical Mastectomy are being done at LLR Hospital. Advanced Laparoscopic surgeries like, TAPP, TEP (Laparoscopic Inguinal Hernia Repair) and Combined Laparoscopic surgeries are also being done successfully at LLR hospital.

4.2 Orthopedic Surgery Dept.

During the year, special operations like **Total Knee Joint operations and Hip Joint Replacement operations** have been conducted in LLR hospital. Similarly, routine Orthopedic surgeries are being done under C-arm Image Intensifier like Open Reduction & Internal Fixation (ORIF) of fractures with DC Plates and Nails etc.

No. of Major operations: 205

No. of Minor operations: 856

4.3 Modular Operation Theatre

Modular Operation Theatre has been made operational. Operations are being conducted in the Modular OT which reduces infections to a great extent and faster post operative recovery of patients has been made possible.

4.4 Gynecology & Obstetrics Dept.

Gynecologist (CMP) is also available in this hospital. Thus all gynae cases are being handled in the hospital itself. All major surgeries like LSCS, Total Abdominal Hysterectomy and minor operations like D&C etc are conducted in the hospital. With the assistance of an anesthetist, complicated cases like removal of large tumors have also been undertaken.

No. of deliveries conducted during the year: 22

4.5 Cancer Screening

Mammography & PAP smear have been introduced & are regularly done to screen cancer in women. Tie up with super specialty hospitals is available for treatment of such cases.

4.6 Casualty Dept.

Emergency services are available round the clock. Doctor remains on call duty during the day as well as night. Three ambulances are available in the casualty out of which one is made available at First-aid-post inside the workshop. Serious cases are referred to recognized hospitals, such as Sacred Heart Hospital, Ghai Hospital, Vasal Hospital, Tagore Hospital, BBC Heart Care, Jalandhar, CMC Hospital, Ludhiana & sometimes to Civil Hospital, Kapurthala. Casualty is being maintained according to ISO specifications. Casualty Dept. has been upgraded by providing patient isolation curtains for all beds to enhance patient comfort and privacy.

4.7 Critical Care Ambulance

An air conditioned Critical Care Ambulance has been procured for LLR hospital. This ambulance is equipped with various life support appliances for critical patients like Myocardial Infarction (Heart Attack), respiratory failure, head injury etc. It has oxygen pipe line supply, transport ventilator, Vital signs monitor, Defibrillator, Suction apparatus, Capnograph along with foldable stretcher & wheel chair & scoop stretcher etc. The interiors have been designed to provide a temperature controlled cabin with seamless hygienic work surface. This ambulance is the only one of its kind on the Indian Railways.

4.8 Physiotherapy Deptt.

There is a well equipped Physiotherapy unit having all the basic gadgets like Short Wave Diathermy, Electric/Differential therapy, Pulsating Electrostatic field therapy and a number of electronic bio-feed back. Modern equipments namely Pulsed Diathermy, Combination Therapy and Digital Muscle Stimulator are available in Physiotherapy dept. Cryo-therapy, Guidance therapy unit, and Whole body Vibration unit have been added. A new machine, Magneto therapy unit, latest in the field, has been installed and shown remarkable results in old osteoporosis patients. With the addition of these modern equipments, quality of treatment and speedy recovery of patients has gone up considerably. This unit is being managed by a Physiotherapist. Most advanced 3D orthopedic traction system and Shock Wave Therapy Unit (Radial shockwave therapy) has also been installed in the Dept. which is considered to be latest and State of the Art technology. It is effectively used in treating ailments like tennis elbow, planter facilities, calcanious spor etc.

Total no of patients attended Physiotherapy: 7916
(Both outdoor & indoor)

4.9 Oxygen Manifold

This provides for uninterrupted supply of oxygen and vacuum for suction purpose at patients' bedside.

4.10 Dental Deptt.

This department is managed by a part time Dental Surgeon who does preventive and curative work as well as conduct children screening camps in schools of RCF regularly for dental problems.

No. of patients attended during the year:	4641
No. of fillings:	5272
No. of X-rays:	1820
No. of extractions:	659
No. of RCTs :	20

5.0 FAMILY WELFARE ACTIVITIES

There is no separate family welfare staff but day to day activities are carried out by the nursing staff. Following are the achievements of Family Welfare Dept. during the year 2009-10.

Sterilization	-	05
IUD	-	10
Oral Pills	-	50
BCG	-	50
DPT & Polio	-	126
Measles	-	125

5.1 Immunization Programme

Three doses of Hepatitis vaccine for Hepatitis 'B' & Inj. Tyvax are given mainly to children under 15 years and some adults.

No. of beneficiaries for Hepaccine 515
No. of beneficiaries of Inj. Tyvax. 148

Family statistics have been completed in the form of a database maintained in the hospital computers. MMR vaccination for all eligible children has been introduced. Hence we now cover 10 vaccines of preventable diseases.

Ante Natal checks are done biweekly in which 2 doses of TT vaccine are given to all pregnant mothers along with iron and folic acid supplements. Regular immunization of children is carried out. Regular surveys are conducted by home visits of employees and condoms and oral pills are also distributed along with counseling and education regarding maternal and child health care.

5.2 Pulse Polio Immunization Programme

Pulse Polio Immunization Programmes are organized as per schedule every year. During the year 2 phases of Pulse Polio Programmes were conducted as under:

Date	Railway	Non.Rly.	Total
(Special PPIP arranged for migrated labour for 5 times during 2010-11)	----	324	324
23/01/2011	780	460	1240

On the first day, children were administered Polio drops at respective booths and trains. On the 2nd and 3rd day, home to home survey was done to immunize those children who could not attend the booths and left on first day. For the next 4 days, teams vigorously visited house to house to convert X marked houses to P. In addition, to eliminate this disease, Pulse Polio drops are being administered to the migrated labour staying in slums outside RCF. During the year, special teams have been sent to administer the pulse polio drops to about 325 children at different intervals.

5.3 Medical Equipments procured under M&P Programme

SN	Name of equipment	Qty	Cost (in lacs)	Used for
1	Fetal Monitor	1	2.01	For monitoring cardiac condition & respiratory system of new born babies.
2	Shockwave therapy	1	17.5	Tennis elbow, plater facitis, calcaneous spur etc.
3	Advanced Orthopedic Traction System unit	1	4.88	Prolapse Inter Vertiveral Disc management, cervical spondylysis etc.

6.0 OTHER ACTIVITIES

6.1 Cataract Surgery Camp

A Cataract Surgery Camp was organized on 8th & 9th Dec'2010 at LLR hospital/RCF in collaboration with Ophthalmologists of Northern Railway. After screening more than 58 patients, 18 patients were short listed for surgery. The cases were screened & preoperative workup was done with the help of Dr. S.P.Sharma, Sr.DMO/FZR & Dr.Sanjiv Sharma Sr.DMO/RCF. The cases were operated by Dr. O.P.Anand Sr.DMO/NRCH, Dr.Nittu Sr.Resident and & Dr.S.P.Sharma from Div.Hospital, Ferozepur using Phacoemulsification technique, which is the latest technique for the surgery of the cataracts. Overall, the camp & care was highly appreciated by the patients & their relatives.

6.2 Total Knee Joint Replacement

Total Knee Joint operation was done for the first time in LLR hospital on 08.12.2009 in the Modular operation

Theatre with the help of super specialist Orthopedic Surgeon Dr.Shubhang Aggarwal (Mch.Ortho) / Jalandhar. Now, these operations are being conducted successfully.

6.3 Hip Joint Replacement

Similarly, Hip Joint Replacement operation was also done for the first time in LLR hospital on 26.03.2010 successfully in the Modular operation theatre with the help of super specialist Orthopaedic Surgeon Dr.Shubhang Aggarwal (Mch.Ortho)/ Jalandhar. Now these operations are being conducted regularly.

6.4 Arthroscopy of Joints

Through this joint surface and joint content are examined under direct vision through Arthroscope and various diagnostic procedures as well as operative procedures can be done.

6.5 Oral Health Check Ups

During the year, Oral Health Check Ups were being conducted in different schools in RCF campus during which about 460 children were examined. Children were also told about the importance of healthy teeth and ways to keep them neat and healthy.

6.6 Intensive Care Unit

Six bedded Air Conditioned Intensive Care Unit (ICU) has been started in LLR Hospital w.e.f. 11.06.2008. This has helped for speedy recovery of seriously ill patients and post operative cases.

6.7 Token Display System

Token Display System, the first of its kind in Indian Railways was started w.e.f. 23.08.2008 and is functioning satisfactorily. With the introduction of this system, the status of current tokens as well as total tokens is known to the patients before registration. This has been highly appreciated by patients and the system is running smoothly.

6.8 AIDS Control Programme

Under NACO (National AIDS Control Organization) guidelines, AIDS Control Programme is being conducted at LLR Hospital. Awareness about the

disease and its preventive measures were disseminated to medical staff and general public. Medical & para medical staff are regularly sent for training on Prevention & Control of AIDS conducted at Central Hospital, NDLS by NACO(National Control Organization)

Sentinel Survey

On the advice of Railway Board, 100 tests of 1000 patients for HIV have been done in the Lab. of LLR hospital and all the tests were found negative.

STD Clinic

Special weekly clinics for STDs have been started separately for male & female patients.

6.9 5-S System

During the month of Nov'2010, Surveillance Audit of 5-S System in RCF including LLR hospital was carried out. LLR hospital has been awarded '5-S' Par Excellence Certificate for maintaining 5-S Work Place Management System for the period April 2010 to Sept.2010. LLR hospital has again been adjudged Best Hospital in maintaining 5S Work Place Management System for the period Oct'10 to Mar'11 during the 5th Surveillance Audit.

6.10 Bio-Medical Waste Management

Hospital is carrying out Bio-medical Waste Management according to guidelines laid down by PPCB & ISO specifications. Bio-medical waste is segregated at the source of generation in two colour coded dust bins and disposed off as per PPCB guidelines. This work has been entrusted to Approved Contractor by PPCB who collects the bio-medical waste and take it away for further disposal

- Total Quantity of Bio-medical taken away by the contractor 895.50 Kg
- Total Quantity of waste for shredding taken away by the contractor 1207.05 Kg

No hospital waste is allowed to mix in other wastes. Authorization for generation/disposal for hospital waste was granted vide letter dated 10.4.2002 & 23.10.2002 by Punjab Pollution Control Board, Patiala.

6.11 Safe Mercury Handling

A separate protocol has been laid to handle mercury waste safely. Exposure to mercury has been minimized by replacing mercury thermometers with digital thermometers.

6.12 Computerization

An independent network of hospital computers exists which is connected through link with server based in Administrative Block with one terminal serving as client server, and others connected to it through LAN cables. A full-fledged Hospital Management System (HMS) software is being developed in-house with the help of programmers of IT Dept. Regular backup of crucial data is made. The purpose of the software is to streamline the important data of the hospital and improving the reliability and transparency of hospital records. In addition to maintaining database of RCF employees and families for OPD registration, all the important statistics have been collected regarding family planning and immunization as Family Welfare database. Medical inventory, Procurement of medicines, Receipt and Issue of Medicines through Computer, Local Purchase of medicines and Laboratory reports have already been computerized and information regarding referral of cases to recognized non-Railway Hospitals/Civil Hospital & for investigations are also computerized. OPD Management Module for use in Doctors' chambers has been implemented. Indoor module and OHSAS Health Screening Module have also been implemented during the year.

6.13 Medical Examination

Medical examination of employees & candidates appointed for RCF is done in our hospital.

Medical Examination conducted during the year	423
Medical Boards conducted during the year:	06

6.14 Medical Drug Store

Most of the medicines are procured through limited tenders on annual basis. Good quality medicines from reputed companies are procured for RCF patients. There has been total computerization of the Medical Stores. This includes the Main store, Sub Store and the Local Purchase of medicines. All inventory management is done through HMS & efforts are made to have all regular used medicines in adequate supply in the hospital.

6.15 Hindi Award

During the year 2010-11, Medical Department has bagged 1st Prize for working In Hindi Language.

6.16 St. John Ambulance Brigade

Headquarter St. John Ambulance Brigade, Rail Coach Factory, Kapurthala has 219 on serving members (Ambulance Division and 279 School children Cadet Division (boys & girls). Local and Annual training camps are also arranged. During the year, SJAB staff has imparted First Aid training to about 120 employees & 156 boys & girls. They attend all functions held by RCF like Republic Day, Independence Day and provide first aid on various occasions, religious functions, various festivals such as Baisakhi, Diwali etc. and in various tournaments held in RCF.

In addition, SJAB organized Annual Camp for Ambulance Division at Gangtok WB from 10.5.2010 to 22.5.2010. They also organized swimming training camp for SJAB members from 28.05.2010 to 31.08.2010 at Swimming Pool RCF.

7.0 HEALTH & SANITATION

There is one Sr. Health Inspector, three Health Inspectors, 16 Safaiwalas against the sanctioned strength of 29 to look after the sanitation work of Hospital, anti malarial insecticide spray in the hospital, colony and workshop etc. The Solfac WP-10 is being used for Anti Mosquito spray, Nuvan is being used for Wasps and yellow wasps, Recumin tracking powder for killing rodents and Baygon Bait for killing flies etc. One Floor Cleaning Machine has

been received in this dept. The machine is able to clean both dry as well as wet surface effectively. The department is also looking after the Water testing and PFA work. Following were the main activities during the year 2010-11:

Bacteriological Examination

Samples Test 296

Found Satisfactory 282

% satisfactory 95%

Residual Chlorine Test

Samples Test 3308

Found Satisfactory 3264

% satisfactory 98.6%

Report of unsatisfactory samples, if any, is sent to Civil Engineering Deptt. for corrective measures

Shri Pardeep Kumar, GM/RCF during inspection of hospital

Paramedical staff taking care of a patient

VIGILANCE

1.0 GENERAL

The main objective of Vigilance organization has been to create vigilance consciousness among the officers, supervisors and staff of RCF. Vigilance is the basic function of the executive himself and external vigilance by Vigilance organization is only meant to assist in this administrative function at all levels. Therefore, more emphasis is placed on preventive and educative vigilance. To bring awareness about vigilance, Vigilance Awareness Week was celebrated from 25.10.2010 to 01.11.2010 and 11th issue of Vigilance Bulletin was brought out by Vigilance organization of RCF to educate the staff in getting more vigilance in their day to day working.

2.0 ORGANIZATION

Chief Vigilance Officer (Part Time)	- 01
Dy. Chief Vigilance Officer	- 01
Non-Gazetted (Group-'C')	- 03
Non-Gazetted (Group-'D')	- 02

A view of Vigilance Awareness rally

3.0 PERFORMANCE

The results achieved by the small vigilance organization of RCF during the year 2010-11 are as under.

3.1 Preventive checks

a)	No. of PCs conducted	- 48
b)	No. of PCs investigated	- 47

3.2 Complaints

a)	No. of complaints received	- 125
b)	No. of complaints taken up for Investigation	- 60
	No. of complaints filed (being anonymous)	- 45
d)	No. of complaints sent to concerned Deptt. (as no vigilance angle was involved)	- 24
e)	No. of complaints investigated	- 43

3.3 No. of cases resulted in DAR action

a)	Gazetted	- 05
b)	Non-gazetted	- 08

3.4 No. of officials recommended for DAR action

a)	Gazetted	Major	- Nil
		Minor	- 07
b)	Non-gazetted	Major	- Nil
		Minor	- 06

3.5 No. of officials punished under D&AR

a)	Gazetted	- 02
b)	Non-gazetted	- 14

3.6 No. of officials taken up under Administrative action

a)	Gazetted	- 04
b)	Non-gazetted	- 03

3.7 No. of cases resulting in system improvement - 09

3.8 Additional earning/economies accrued to Railways as a result of Vigilance activities

- Rs.2.92 Lakh

SECURITY

1.0 GENERAL

Railway protection Force (RPF) is an Armed Force of the Union. A strength of 252 men, which includes the Dog Squad, has been sanctioned for the protection of Rail Coach Factory. Out of which 24 Posts have been provided from production cadre for manning the Fire Station. This force is commanded by the Security Commissioner/RPF. This unit works under the administrative control of Addl. Director General cum CSC/RPF, Northern Railway, Baroda House, New Delhi and general supervision of the General Manager/RCF.

2.0 POSTING & TRAINING

The RPF staff have a tenure posting at RCF for 5 years. Firozepur & Ambala Division are associated with RCF for posting of staff, which is done by the CSC/RPF. The staff are imparted training to improve their skill in Arms handling and to maintain their physical fitness. RPF executive staff posted in Fire Branch are given local training in handling of fire equipments.

3.0 ACCOMODATION

71 staff are accommodated in barracks and 70 staff are allotted residential quarters. The barrack has been provided with all amenities like modernized kitchen, entertainment room, water coolers etc. A gymnasium has also been provided with modern gadgets to keep the RPF personnel fit and healthy. The sports facilities like Volleyball, Table tennis, have been provided in the barrack. Tata Sky Dish with 29" Color TV have also provided in the barracks. Desert Cooler in all rooms have also been provided .

4.0 FIRE FIGHTING

Although Fire Branch has been closed in RPF and now there is no recruitment or training in Fire Branch. But the GM/RCF has created 24 posts for RCF Fire Branch. In absence of recruitment and training for fire staff, the Fire Branch is managed by RPF executive branch staff. The RPF staff posted in fire wing are briefed about handling of fire equipments. There is one Fire Tender , one trailor pump and one portable pump. The maintenance of Fire extinguishers is managed by respective departments. During the year 2010-2011, 22 staff of RCF workshop has been given training in first-aid fire fitting at their place of work.

5.0 DOG SQUAD

RPF Dog Squad has got a sanctioned strength of 4 dogs (two sniffer & two trackers) and are utilized at workshop gates and other important places for sniffing the anti sabotage and detection of crime.

6.0 CRIME CONTROL

During the year 2010-11 total 27 cases were detected under RP(UP)Act with the recovery of stolen Rly property worth Rs.53425/-and arrest of 56 criminals. Due to strict vigil kept by the Force, 169 persons were arrested and prosecuted under various sections of Rly. Act and amount of Rs.105900/- realized from them as fine. All the Entry/Exit gates in town ship and factory area are being manned by the RPF staff round the clock.

7.0 SECURITY ARRANGEMENTS

During the year the security arrangements inside the workshop and township area has been reviewed and found satisfactory. The drives are being conducted by RPF/RCF staff in RCF premises time to time against the violation of traffic rules. Co-ordination meetings are organized with local civil administration, police authorities and Rly. administration to maintain the law & order in RCF. Special drive are launched time to time for better security arrangements in RCF. CCTV's have been installed at main entry gates to keep vigil over the criminals and to stop unauthorized entry in the RCF premises.

8.0 MODERNISATION

To strengthen the working of the force, the force have been provided with modern items like Digital Still Camera, Metal Detector, Finger Kits., Loud Hailer, Photo State Machine, Fax Machine with photo state , Scanner & Copier, Computers, Bullet proof Jackets & Helmets, Bomb basket Reflective sticks, Night Vision Binocular, Day Vision Binocular and Walkie -Talkie Sets, Chargeable torch, Security Alarm System.

9.0 S PORTS ACTIVITES

RPF staff participate in all sports activities organized by RCF and Northern Railway RPF.

10.0 OTHERS

During the year 2010-11, 10 staff has been deployed at CBE (Kerala) for Rajya Sabha election duty. Five RPF Staff has been deployed at Howrah for Bandobast duty.

RPF Contingent during Independence Day Parade

SPORTS

1.0 GENERAL

RCF has always been supportive of sports. During 2010-11, it has made significant achievements and its sports persons have brought laurels to the Nation. RCF has hockey stadium with astroturf, cricket stadium, floodlit basketball courts, modern gymnasium and other sports facilities etc. RCF Sports Association got privilege to organize the tournaments like ;

- League Phase of 68th All India Railway Football Championship held at RCF, Kapurthala from 31.01.2011 to 06.02.2011. Total No. of 100 sports persons and officials from four Zonal Railways and Production Units took part in this championship.
- League Phase of 69th All India Railway Men Hockey Championship held at RCF, Kapurthala from 14.03.2011 to 19.03.2011. Total No. of 100 sports persons and officials from five Zonal Railway and Production Units took part in this championship.
- 32nd India Railway Women Hockey Championship at RCF, Kapurthala from 24th to 29th March 2011 in a befitting manner. Total No. of 160 sports persons & officials from seven Zonal Railways and Production Units took part in this championship. Sh.Gurdev Singh, FA&CAO & President/ RCFSA was the Chief Guest on the occasion and distributed the prizes to the winners.

In order to channelise the over flowing energies of youth, various sports activities were promoted in a big way by including it as habit rather than once-in-a-while affair. By providing volleyball nets at various locations in township, sports culture was taken to homes. Inter-departmental and club tournaments were conducted for games like Football, Cricket, Tug-of-war. Monthly Medal Round Golf Tournaments remained a regular and highly sought after events for keen golfers.

2.0 ATHELETICS

RCF Cross-country team won Silver medal in the All India Railway Cross-country Championship held at Udaipur on 15th December 2010.

2.1 Shri Satnam Singh (800 & 1500 meters) represented Indian Railway Athletic team and won Bronze Medal in 1500 meters race in the 50th Open National Championship held at Kochi (Kerala) from 15th to 18th May 2010. Indian Railway won Gold Medal in the above championship. He attended national coaching camp for 19th Common Wealth Games,2010 and 16th Asian Games,2010. He won Silver Medal in 800 & 1500 meters race in the 76th All India Railway Athletic Championship held at Chennai from 9th to 11th February 2011. He represented Punjab Athletic team and won Silver Medal in 800 meters race in the 34th National Games held at Ranchi from 12th to 26th February 2011.

2.2 Miss Amanpreet Kaur represented Indian Railway Athletic team and won Bronze Medal in Discus throw in the 50th Open National Championship held at Kochi (Kerala) from 15th to 18th May 2010. Indian Railway

2.3 won Gold Medal in the above championship. She represented Punjab Athletic team and won Silver medal in discus throw in the Women National Athletic Championship held at Agra from 13th to 16th December 2010. She won Silver Medal in Discus throw in the 76th All India Railway Athletic Championship held at Chennai from 9th to 11th February 2011.

2.4 Shri Jatinderpal Singh won Bronze medal in the Common Wealth Run Championship held at Jalandhar on 26th June 2010.

2.5 Shri Tejinder Singh represented Indian Railway Athletic team in National Athletic Championship held at Jodhpur from 30th January 2011. Indian Railway Athletic team won Silver medal.

2.6 Shri Jasvinder Singh was nominated as Technical Official in the 19th Common Wealth Geme-2010 held at New Delhi from 3rd to 14th October 2010.

2.7 RCF Cross-country team won Gold medal in the 12 Km Cross-country Championship held at Kadian, Gurdaspur on 15th January 2011.

3.0 HOCKEY

3.1 RCF Women Hockey team won Gold medal in the 8th ONGC All India Maharaja Ranjit Singh Jr. Gold Cup women hockey tournament held at Amritsar from 10th to 15th October 2010. RCF Women hockey team represented Punjab Hockey team and won Bronze medal in the National Women Sports Festival Group-11 held at Bhopal from 24th to 27th November 2010. RCF Women hockey team won Gold medal in the All India Shaibzada Ajit Singh women hockey Champion Trophy held at Ludhiana from 12th to 14th March 2011.This team won Bronze medal in the All India Railway Women Hockey Championship held at RCF, Kapurthala from 24th to 29th March 2011.

3.2 RCF Men Hockey won Silver medal in the All India Railway Men Hockey Championship held at Bhopal from 24th to 28th March 2011.

3.3 Miss Deepika, Miss Yogita Bali , Miss Preety Sunila Kiro, Miss Rosalind L. Ralte represented Indian women hockey team in Japan and China from 17th to 24th March 2010.

RCF Men Hockey Team in-action

Miss Deepika, Miss Yogita Bali , Miss Preety Sunila Kiro , Miss Monika represented Indian Women Hockey in 1st Asia Champions Trophy held at Bussan (South Korea) from 27th to 31st July 2010. Indian women hockey won the Bronze Medal.

Miss Deepika, Miss Rosalind L. Ralte, Miss Monika participated in test matches with New Zealand from 13th to 24th May 2010. Indian women hockey team won the series.

Miss Deepika , Miss Rosalind L. Ralte, Miss Monika played test Matches at Canada from 10th to 20th June 2010 and Four Nation hockey Championship at Germany from 21st to 28th June 2010

Miss Deepika ,Miss Monika participated in World Cup Hockey Championship held at Rosario (Argentina) from 29th Aug. to 11th Sept. 2010

Miss Deepika, Miss Yogita Bali, Miss Rosalind L. Ralte represented 16th Asian Games held at Guangzhou (China) from 12th to 27th November 2010.

Miss Deepika, Miss Yogita, Miss Preety Sunila Kiro Miss Rosalind L. Ralte participated 19th Common Wealth Gemes-2010 held at New Delhi from 3rd to 14th October 2010.

Miss Deepika , Miss Yogita, Miss Rosalind L. Ralte represented Indian Railway women hockey team in National Women Hockey Championship held at Sonipat (Haryana) from 21st to 30th January 2011. Indian Railway Women Hockey team won Gold Medal.

Mrs Harjit Kaur & Mrs.Shashi Bala were deputed as coach with Punjab Women Hockey team in the National Women Sports Festival Group-11 held at Bhopal from 24th to 27th November 2010 and Punjab women hockey team won Bronze medal.

4.0 BASKETBALL

RCF Basketball team won Silver medal in the 53rd All India Railway Basketball Championship held at Secunderabad from 26th Nov. 3rd Dec. 2010 and got Silver medal in the All India Basketball Championship held at Kottayam, Kerala from 9th to 16th January 2011.

4.1 Shri Arjun Singh, Shri Shadab Khan represented Indian Basketball team in the 21st FIBA Asia U-18 Basketball Championship held at Sana's Yemem from 22nd Sept. to 1st Oct. 2010

4.2 Shri Arjun Singh, Shri Shadab Khan, Shri Bijender Kumar, Shri Harsh Vardhan represented Indian Railway Basketball team in 61st National Basketball Championship held at New Delhi from 28th Dec. 10 to 4th Jan. 2011.

4.3 Shri Arjun Singh, Shri Shadab Khan, Shri Bijender Kumar, Shri Harsh Vardhan represented Indian Railway Basketball team in the 6th Savio Cup Don Bosco Basketball Championship held at Mumbai from 23rd to 30th January 2011. Indian Railway Basketball team won Gold medal.

4.4 Shri Arjun Singh represented Punjab Basketball team and won Gold medal in the 34th National Games held at Ranchi from 12th to 26th February 2011.

4.5 Shri Rajan Sharma represented Punjab Basketball team in 61st National Basketball Championship held at New Delhi from 28th Dec. 10 to 4th Jan. 2011.

5.0 WRESTLING

5.1 Shri Hari Krishan (55 Kg. Greco-roman style) attended national wrestling coaching camp for 19th Common Wealth Geme-2010 and attended national wrestling coaching camp for 16th Asian Games-2010.

He won Gold medal in the 52nd All India Railway Wrestling Championship held at Varanasi from 3rd to 6th February 2011.He represented Punjab Wrestling team and won Bronze medal in the 34th National Games held at Ranchi from 12th to 26th February,11.

5.2 Shri Ajay Kumar (Wrestler Greco-roman style) represented Delhi Wrestling team and won Bronze medal in the 11th Late Khashab Jadhav Chashak Wrestling (Federation) Cup held at Karad, Maharashtra from 25th March to 2nd April 2010. He won Gold medal in the 52nd All India Railway Wrestling Championship held at Varanasi from 3rd to 6th February 2011.

5.3 Shri Gurdev Singh (Wrestler 120 Kg. Free style)represented India Railway Wrestling team and won Silver medal in the 55th National Wrestling Championship held at Ranchi from 25th to 28th December 2010. He won Bronze medal in the 52nd All India Railway Wrestling Championship held at Varanasi from 3rd to 6th February 2011.

5.4 Sh. Gagandeep Singh (Wrestler) represented Punjab Wrestling team and won Bronze medal in the 34th National Games held at Ranchi from 12th to 26th February 2011.

6.0 FOOTBALL

RCF Football team remained runners-up in the 13th Daoharu Mungkhlong Trophy Football tournament held at Dotma, Assam from 19th Sept. to 10th Oct. 2010.Team was placed runner-up in the 12th All India Police Martyr football tournament held at Jammu on 29.11.2010. Hon'ble Chief Minister of J&K Zanab Umar Abdulla appreciate the RCF Football team at Jammu. RCF team also won Bronze medal in the 67th All India Railway Football Championship held at Bilaspur, Chhattisgarh from 22nd to 27th February 2011.

7.0 GOLF

RCF Golf team won Gold medal in the Mid-Session Golf tournament held at Secunderabad from 29th to 31st October 2010 and also won Bronze medal in the All India Railway Golf Championship held at Mumbai from 12th to 14th January 2011.

RCF Women Hockey Team in-action