IRJTAE

Ingenious Research Journal for Technological Advancements in Engineering
(Open Access, Peer-Reviewed, Technological Journal)
Volume:03/Issue:01/March-2026 www.irjtae.com

"3D Scanner Machine"

Ashwini Kolhe [1], Ankita Hendaskar[2], Disha Katkar[3], Vaishnavi Bhoyar[4], Dr. Shubhada Diwan[5]

[1,2,3,4] Student, Department of Electronics and Telecommunication Engineering, Government College of Engineering, Yavatmal, Maharashtra, India.

[5] Assistant Professor, Department of Electronics and Telecommunication Engineering, Government College of Engineering, Yavatmal, Maharashtra, India.

ABSTRACT

3D scanning technology is essential for turning real-world objects into precise digital models that can be used in areas such as product design, biomedical research, reverse engineering, and digital manufacturing. Despite its importance, commercial 3D scanners are often too costly, making them difficult to access for students and small-scale industries. This work introduces the design and development of a low-cost 3D scanner built with an Arduino Nano, a Sharp IR distance sensor, a stepper-motor driven rotating platform, and an SD card for data storage. The project is currently about halfway complete: the stepper motor rotation, mechanical stability, sensor testing, and data logging are all working successfully. Features like full 360-degree scanning, calibration, and STL file reconstruction are still in progress. The paper explains the hardware setup, methodology, mathematical modelling, software workflow, and initial outcomes. Overall, the system offers an affordable educational tool for learning the fundamentals of 3D scanning. Index Terms—3D Scanner, Arduino Nano, IR Sensor, Stepper Motor, SD Card, MeshLab.

INTRODUCTION

3D scanning is a transformative technology used in fields like engineering, healthcare, and architecture to convert physical objects into precise digital models. While it is essential for modern applications like **Industry 4.0**, digital twins, and rapid prototyping, professional scanners are often too expensive for students and hobbyists.

To bridge this gap, a low-cost, open-source 3D scanner has been developed using the Arduino platform.

I. METHODOLOGY

The development of the Arduino-based 3D scanner follows a structured sequence of stages:

1)Hardware Setup:

- The system is built around an Arduino Nano, an IR distance sensor, and stepper motors.
- The IR sensor is mounted on a movable platform that is driven by the stepper motors.
- - All components are wired to the Arduino, forming a complete and integrated scanning system.

2) Software Development:

- A custom Arduino program is written to control motor movement and collect sensor readings.
- The software synchronizes motor rotation, IR sensor data acquisition, and data storage.
- It is designed to generate a 3D point cloud of the scanned object, with flexibility for future customization.

3) Scanning Process:

- The object to be scanned is positioned in front of the IR sensor.
- Once activated, the stepper motors rotate the platform or move the sensor in a controlled manner to capture measurements from different angles.

• The IR sensor records reflected signals from the object's surface and sends distance values to the Arduino.

4) Data Processing:

• The Arduino processes the raw sensor readings.

• Algorithms convert the distance measurements into a structured point cloud, where each point represents a coordinate of the object's geometry.

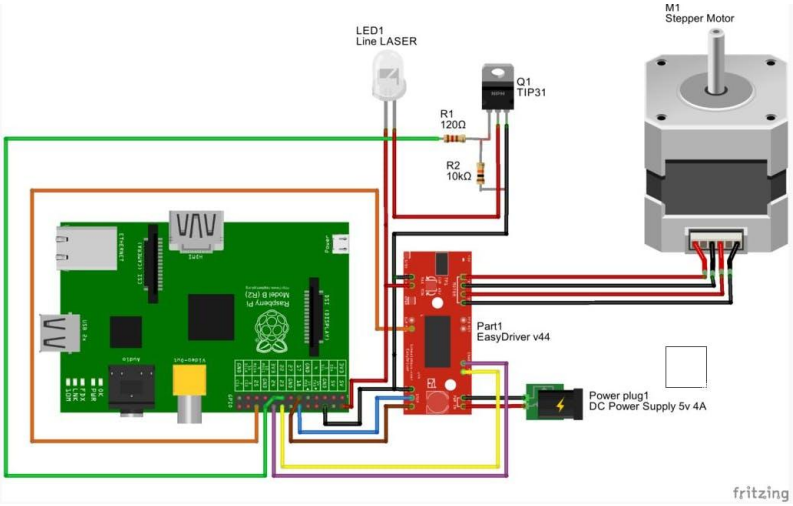

Fig. 1. Working Block Diagram

5) Output Generation:

• The final output is a 3D point cloud that can be saved in formats such as STL.

• This file can be imported into 3 D modeling software for mesh generation, surface refinement, or even 3D printing. The block diagram illustrates the workflow of the proposed Arduino-based 3D scanner system, showing the interaction between hardware, software, data processing, and output generation.

II. MODELLING AND ANALYSIS

The modelling and analysis of a 3D scanner machine project involve integrating mechanical design with optical geometry to convert physical objects into precise digital data. In the modelling phase, CAD software is used to design a rigid structural frame and automated turntable, ensuring that the spatial baseline between the camera and the light source (laser or structured light) is mathematically defined for accurate triangulation. Analysis follows by calculating the **Intrinsic** and **Extrinsic** parameters of the sensor system to minimize lens distortion, alongside performing **Finite Element Analysis (FEA)** to eliminate mechanical vibrations that could blur the scan. The final stage analyzes the resulting **point cloud**—a collection of (x, y, z) coordinates—using algorithms like **Iterative Closest Point (ICP)** to stitch multiple scan angles into a single, cohesive 3D mesh ready for reverse engineering or 3D printing.

III. RESULTS AND DISCUSSION

At the halfway stage of the 3D Scanning Machine project, the core hardware setup was successfully completed and tested. The main components—Arduino Nano, stepper motor, motor driver, IR sensor, push button, and rotating platform—were assembled into a working system. The IR sensor reliably

detects the presence of an object, and scanning is initiated through the push button. Once activated, the Arduino sends precise step pulses to the stepper motor, resulting in smooth and controlled rotation of the turntable. Although the full scanning process and 3D model reconstruction have not yet been implemented, the stable performance of the rotary mechanism demonstrates that the fundamental mechanical and electronic systems are functioning correctly. This milestone establishes a solid foundation for the next stages of development, which will include: - SD card data logging for storing captured measurements, - multi-angle scanning to collect complete geometry data, and - mesh reconstruction to generate the final 3D model.

Table 1. 3D Scanner Performance Analysis (Zone 6)

SN	Stage Type	Relative Zone	Measured Output (mm)	Deviation (Δ)
1	**Stage-A**	6	10.990	-0.010
2	**Stage-B**	6	11.335	+0.335
3	**Stage-C**	6	10.248	-0.752
4	**Stage-D**	6	11.364	+1.116
5	**Stage-E**	6	10.248	-0.752
6	**Stage-F**	6	10.990	-0.010
7	**Stage-G**	6	11.290	+0.290
8	**Stage-H**	6	13.200	+2.210
9	**Stage-I**	6	11.290	+0.290

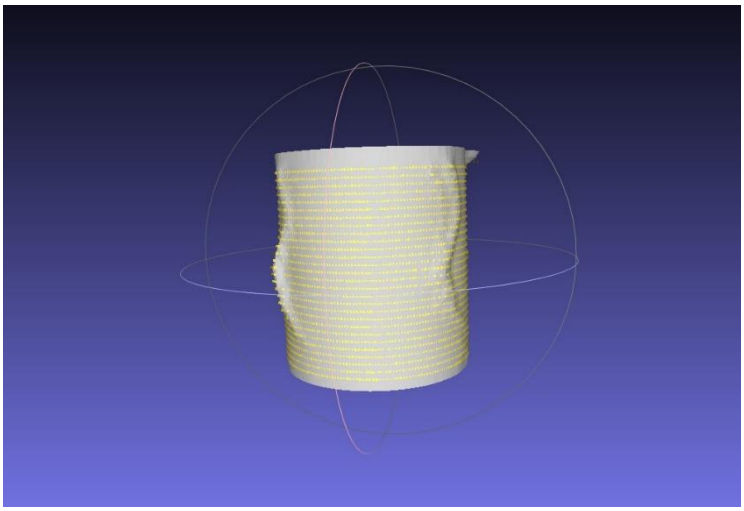

Figure 2: 3D Point Cloud Reconstruction of a cylindrical object.

IV. CONCLUSION

3D printing has become one of the most groundbreaking innovations in modern manufacturing. Its ability to transform digital designs into precise physical objects with minimal waste and complete design flexibility has reshaped industries such as healthcare, automotive, aerospace, and education. By using additive manufacturing, complex shapes that are difficult or impossible to produce with traditional methods can now be created quickly and cost-effectively. This makes 3D printing especially valuable for rapid prototyping, customized products, and small-scale production. Ongoing improvements in materials, printing speed, and automation continue to broaden the scope of what 3D printers can achieve. At the same time, the technology supports sustainability by reducing material usage and enabling decentralized production, aligning well with global priorities in smart and eco-friendly manufacturing. In summary, 3D printing is a powerful technology that will play an increasingly vital role in shaping the future of manufacturing, product design, healthcare, and everyday life. Its adaptability, efficiency, and continuous evolution ensure that it will remain a key driver of innovation for years ahead.

ACKNOWLEDGEMENTS

An I would like to express my sincere gratitude to everyone who contributed to the successful modeling and analysis of this **3D Scanner Machine** project. Special thanks to my project guide and the faculty of the IT department for their technical insights into **image processing algorithms** and **system integration**. I am also grateful for the hardware resources and laboratory facilities that allowed for the precise calibration of the sensors and the structural testing of the scanner frame. Finally, I appreciate the support of my peers and family, whose encouragement was vital in navigating the complexities of converting raw point cloud data into functional 3D digital models.

REFERENCES

[1] P. P. Bhausaheb and J. T. Sandip, “3D Scanner Machine Using Arduino,” International Journal of Advanced Research in Science, Communication and Technology.

[2] C. Usha, K. V. Naidu, H. G. S. N., S. Reddy B., and G. B. H., “3D scanning solution utilizing Arduino Nano technology,” IJCRT.

[3] Y. H. Jo and S. Hong, “Application of Three-dimensional Scanning, Haptic Modeling, and Printing Technologies for Restoring Damaged Artifacts,” Journal of Conservation Science.

[4] M. Javaid, A. Haleem, R. P. Singh, and R. Suman, “Industrial perspectives of 3D scanning: Features, roles and its analytical applications,” Sensors International, vol. 2, p. 100114.

[5] M. Daneshmand et al., “3D scanning: A comprehensive survey,” arXiv preprint arXiv:1801.08863, 2018.

[6] K. Saptaji et al., “Development of a 3D scanner using the laser stripe scanning method,” AIP Conference Proceedings, 2024.

[7] M. Jadayel et al., “Structured-light 3D scanning performance in inprocess and offline inspection of 3D-printed parts,” Additive Manufacturing, 2024.

[8] S. Crowe, S. Gill, A. Smith, and A. Neal, “Evaluation of an optical 3D scanning system for radiotherapy device fabrication,” Journal of Radiotherapy in Practice, vol. 20, no. 4, pp. 430–438, 2021.

[9] “Exploring the potential of 3D scanning in Industry 4.0,” International Journal of Cognitive Computing in Engineering, 2022.

[10] A. Gaykar, A. Jujaray, S. Mutalik, and P. Waghmode, “Design and Analysis of 3D Scanning System for Scanning an Object,” IJERT.

[11] X. Zhang, Z. Jing, and X. Li, “3D reconstruction using infrared depth sensors: A review,” Optics and Laser Technology, vol. 124, p. 105973, 2020.

[12] P. Piekarczuk, S. Mazurek, M. Szer, and I. Szer, “A case study of 3D scanning techniques in civil engineering using terrestrial laser scanning,” Buildings, vol. 14, no. 12, p. 3703, 2024.