IRJTAE

Ingenious Research Journal for Technological Advancements in Engineering
(Open Access, Peer-Reviewed, Technological Journal)
Volume:03/Issue:01/March-2026 www.irjtae.com

SMART ENERGY METER FOR POWER THEFT DETECTION

Samiksha Bande*1, Mohit Gharote*2, Chetana Zade*3, Manaswi Nanhe*4, H.O.D. Dr. S. S. Thakare*5

*1,2,3,4 Students, Department of Electronics & Telecommunication Engineering, Government College of Engineering, Yavatmal, Maharashtra, India

*5 Head of Department, Department of Electronics & Telecommunication Engineering, Government College of Engineering, Yavatmal, Maharashtra, India

(Dr. Babasaheb Ambedkar Technological University, Lonere)

ABSTRACT

Electricity theft is a major contributor to non-technical losses in power distribution systems, leading to significant revenue loss, power quality degradation, and grid instability. Conventional energy meters lack the intelligence and real-time monitoring capability required to identify theft and tampering effectively. This paper presents the design and implementation of a **Smart Energy Meter for Power Theft Detection** using embedded systems, Internet of Things (IoT) technology, and intelligent data analysis. The proposed system employs voltage and current sensing along with an energy metering module to accurately measure electrical parameters. in real time. An ESP32 microcontroller serves as the core processing unit, enabling wireless data transmission to a cloud platform for remote monitoring. Hardware-based tamper detection mechanisms are incorporated to identify physical interference such as meter opening and magnetic manipulation. In addition, abnormal consumption behaviour is detected through analysis of real-time and historical energy usage patterns. Experimental evaluation of the developed prototype demonstrates reliable energy measurement, rapid tamper detection, effective anomaly identification, and timely alert generation. The system is cost-effective, scalable, and suitable for residential and small commercial applications. The proposed solution contributes toward reducing non-technical losses and supports the development of intelligent and secure smart grid infrastructure.

Keywords: Smart Energy Meter, Power Theft Detection, Internet of Things (IoT), ESP32, Tamper Detection, Smart Grid, Energy Monitoring, Non-Technical Losses

I. INTRODUCTION

Electrical energy has become an indispensable resource in modern society, supporting residential living, industrial production, commercial activities, transportation, and communication infrastructure. With rapid urbanization, population growth, and industrial expansion, the global demand for electricity has increased significantly. Ensuring efficient generation, transmission, and distribution of electrical power is therefore a critical responsibility of power utilities. However, one of the most persistent challenges faced by electricity distribution companies is **power theft**, which contributes substantially to non-technical losses (NTLs).

Power theft occurs through various illegal practices such as unauthorized tapping of distribution lines, meter bypassing, manipulation of meter readings, magnetic interference, and physical tampering of metering devices. These activities result in severe economic losses for utility providers, reduce revenue recovery, and disturb load forecasting and grid stability. In addition, electricity theft leads to uneven power distribution, voltage fluctuations, transformer overloading, and in extreme cases, large-scale power outages. Conventional electromechanical and basic electronic energy meters are passive devices that merely record consumption and lack the intelligence required to detect theft or tampering in real time.

With the evolution of **smart grid technologies**, traditional metering systems are being replaced by **smart energy meters** that integrate sensing, communication, and computational capabilities. The emergence of the **Internet of Things (IoT)** has enabled continuous monitoring of electrical parameters such as voltage, current, power, and energy consumption, along with real-time data transmission to remote servers. Smart meters equipped with communication modules allow utilities to remotely monitor usage, analyze consumption behavior, and respond rapidly to abnormal conditions.

Recent advancements in **artificial intelligence (AI) and machine learning (ML)** have further enhanced the effectiveness of smart metering systems. By analyzing historical and real-time consumption data, machine learning algorithms can learn normal usage patterns and detect anomalies that may indicate electricity theft. Unlike rule-based systems, Al-driven approaches adapt dynamically to changing load conditions and consumer behavior, thereby reducing false alarms and improving detection accuracy.

This paper presents the design and implementation of a **Smart Energy Meter for Power Theft Detection** that integrates loT technology, embedded systems, and machine learning. The proposed system employs voltage and current sensors along with an energy metering IC to measure electrical parameters accurately. Multiple tamper detection sensors are used to identify physical manipulation of the meter. An ESP32 microcontroller serves as the core processing unit, enabling real-time data acquisition and Wi-Fi-based communication with a cloud platform. Machine learning algorithms analyze transmitted data to detect abnormal consumption patterns and generate timely alerts.

The proposed system aims to reduce non-technical losses, enhance transparency in power distribution, and support the development of secure and intelligent smart grid infrastructure. Its low-cost and scalable design makes it suitable for deployment in residential, commercial, and industrial environments, addressing a critical problem faced by modern power utilities.

Electric power utilities across the world are undergoing a major transformation due to the integration of smart grids, advanced metering infrastructure (AMI), and Internet of Things (IoT) technologies. These advancements enable bidirectional communication between consumers and utilities, allowing continuous monitoring, automated billing, and intelligent energy management. Despite these developments, electricity theft remains one of the most critical challenges affecting the efficiency, reliability, and financial sustainability of power distribution systems, particularly in developing countries.

Electricity theft contributes significantly to non-technical losses (NTLs), which represent energy losses not caused by physical limitations of equipment but by human-induced illegal activities. In India, NTLs account for a considerable portion of total distribution losses, resulting in revenue loss, tariff hikes for honest consumers, deterioration of power quality, and increased stress on grid infrastructure. Conventional metering systems lack the intelligence and communication skills necessary for real-time detection of theft, making manual inspection the main detection method, which is expensive, time-consuming, and inefficient.

The use of high-resolution consumption information from smart meters, along with embedded systems and machine learning algorithms, creates an opportunity to develop intelligent, automated, and scalable systems for real-time detection of electricity theft. This project was developed based on this opportunity, aiming to use low-cost hardware, loT communication, and data analysis to tackle the long-standing issue of electricity theft.

The current power metering and monitoring systems have several challenges in accurately identifying and preventing electricity theft. Conventional energy meters are passive components that merely measure the consumption of electricity without any ability to detect unusual patterns of consumption or any physical tampering with the meters. Manual inspection methods are time-consuming, error-prone, and unable to provide real-time alerts.

Furthermore, software-driven theft detection systems that are solely dependent on consumption patterns are prone to high false-positive rates, especially when there are genuine changes in consumption patterns due to lifestyle changes, seasonal changes, or usage patterns. Most of the current smart metering systems also have high deployment costs, which make them unsuitable for large-scale implementations in resource-poor settings.
Thus, there is a requirement for a cost-effective, intelligent, and real-time smart energy metering system that can:

1. Accurately detect electricity theft.
2. Identify both physical tampering and abnormal consumption behavior,
3. Communicate alerts and data remotely, and

Support scalable deployment for practical utility usage.
Objectives of our project is for designing and developing a Smart Energy Meter for Power Theft Detection using the combination of embedded systems, IoT communication, and intelligent data analysis. The objectives of this project are as follows:

1. To design a smart energy meter that can measure the voltage, current, power, and energy consumption accurately in real-time.
2. To detect power theft using both hardware and software-based approaches.
3. To develop an IoT-enabled communication system for remote monitoring and data transfer to a cloud server.
4. To use machine learning algorithms for pattern recognition related to power theft.

To design a low-cost and scalable system that can be used in residential and small commercial setups.
The main contributions of this project are as follows:

1. Design and development of a cost-effective smart energy meter using an ESP32 microcontroller with the integration of voltage, current, and energy measurement circuits.
2. Development of physical tamper detection systems to detect meter bypassing, casing intrusion, and magnetic interference.
3. Development of an IoT-based real-time data transfer system for continuous remote monitoring and alert generation.
4. Use of machine learning-based anomaly detection for consumption data analysis and theft behavior identification.
5. Design of a comprehensive system integrating hardware security and intelligent data analytics, enhancing detection accuracy and minimizing false positives.

Discussion of a solution applicable to academic research, industrial use, and future smart grid development.

II. METHODOLOGY

The methodology adopted for the proposed Smart Energy Meter for Power Theft Detection focuses on a systematic integration of sensing hardware, embedded processing, communication infrastructure, and data analysis techniques. The approach emphasizes accurate measurement, reliable theft detection, real-time monitoring, and practical feasibility for low-cost deployment. Figure references and implementation flow align with the hardware prototype developed in this project.

System Design

The system is designed using a modular architecture consisting of sensing, processing, communication, and analysis units. Electrical parameters such as voltage and current are continuously measured using appropriate sensors. These values are processed to compute power and energy consumption with the help of an energy metering module interfaced to the microcontroller.

An ESP32 microcontroller is used as the central processing unit due to its integrated Wi-Fi capability, power consumption, and sufficient computational capacity for real-time data handling. In addition to electrical parameter measurement, the system incorporates multiple **tamper detection sensors** to identify physical interference with the meter. These include sensors for detecting enclosure opening, orientation changes, and magnetic influence.

All sensor outputs are monitored continuously. When abnormal electrical behavior or tampering activity is detected, the system immediately flags the event. A control relay is included to enable disconnection of supply under critical theft conditions, ensuring safety and loss prevention.

System Integration and Testing

Subheading should be 10pt Times new Roman,Hardware integration is carried out in a stepwise manner to ensure system stability and reliability. Individual components such as voltage and current sensors, energy measurement circuits. tamper detection sensors, relay modules, and the ESP32 controller are first tested independently. Each module is verified for accuracy, response time, and correct interfacing.

Once individual components are validated, the complete system is assembled and integrated.

Firmware is developed and uploaded to the microcontroller to sensor manage data acquisition, event detection, and communication with the cloud platform. Communication reliability is tested by transmitting real-time data over Wi-Fi under varying network conditions.

Functional testing is performed under normal operating conditions as well as simulated theft and tamper scenarios. These tests confirm proper detection of illegal activities, correct alert generation, and system recovery after fault conditions. Measurement accuracy is cross-verified with standard meter readings to validate performance.

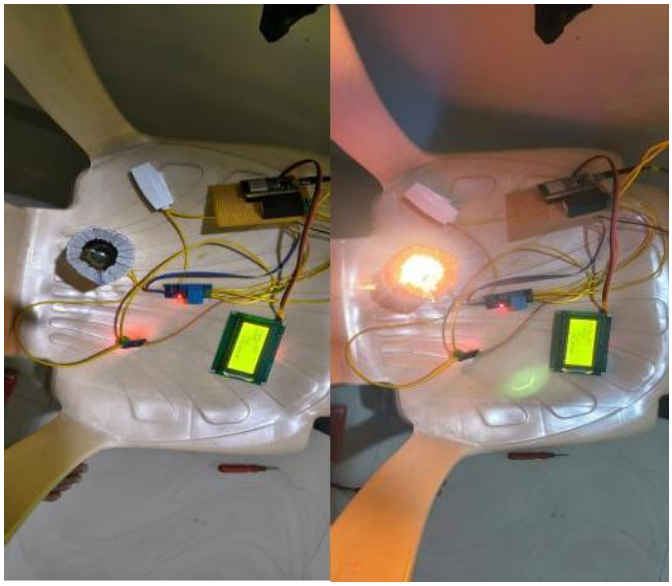

Figure 1: Experimental Setup for Testing

Data Collection Analysis

The system continuously collects electrical parameters including voltage, current, instantaneous power, and cumulative energy consumption. This data is time-stamped and transmitted to a cloud platform for storage and analysis. The collected dataset reflects daily and hourly usage patterns under normal operating conditions.

For theft detection, the system analyzes consumption trends and compares real-time values against learned or expected behavior patterns. Sudden deviations such as abnormal load increments, mismatch between current and voltage behavior, or inconsistent energy usage trigger theft suspicion flags. Tamper sensor events are treated as high-priority indicators and are immediately reported.

Data analysis outputs are visualized through a monitoring dashboard, enabling users or utilities to observe usage trends, detect anomalies, and analyze historical records. This approach improves transparency and supports informed decision-making.

Prototype Refinement

Subheading should be 10pt Times new Roman,Prototype refinement is performed through an iterative development process. After each testing phase, performance limitations and operational issues are identified and addressed. Sensor calibration is refined to improve measurement accuracy and reduce noise. Firmware logic is optimized for faster response time and reduced false detection.

The tamper detection sensitivity is tuned to ensure reliable triggering without interference from normal environmental factors. Communication delays and packet loss issues are minimized through optimized data transmission intervals and error handling routines. Each refinement cycle improves system reliability, robustness, and usability.

This iterative approach ensures that the final prototype achieves a balanced trade-off between performance, cost, and complexity, making it suitable for real-world deployment and academic evaluation.

Theft Detection Logic

Subheading should be 10pt Times new Roman,The theft detection strategy follows a multi-layered approach. Hardware-based tamper detection provides immediate response to physical interference, while software-based

monitoring analyzes electrical parameter behavior. Events detected by either mechanism are logged and verified to avoid misclassification.

If repeated abnormal patterns or confirmed tamper events occur, the system raises alerts and optionally actuates protective measures such as supply disconnection. This combined detection strategy enhances accuracy and minimizes the chances of theft going undetected.

III. MODELLING AND ANALYSIS

The modelling and analysis section of a research paper typically involves describing the theoretical or computational models used to address the research question or hypothesis, as well as the methods employed to analyse the data or outcomes generated by these models. Model and Material which are used is presented in this section. Table and model should be in prescribed format.Electricity theft has long been recognized as a major contributor to non-technical losses in power distribution systems. Traditional energy metering methods relied on electromechanical meters that merely recorded cumulative energy consumption and provided no means for theft detection or remote monitoring. These meters were highly vulnerable to tampering techniques such as meter bypassing, illegal line tapping, and physical damage. As energy demand increased and theft methods evolved, the limitations of conventional metering systems became increasingly evident.

With the advancement of electronic energy meters, improvements were made in measurement accuracy and billing reliability. However, early electronic meters still lacked intelligence, data storage, and communication capabilities. Theft detection continued to rely on manual inspections, which were time-consuming, costly, and inefficient. These methods also failed to provide real-time information, resulting in delayed detection and prolonged revenue losses for utility providers.

The introduction of **smart energy meters** marked a significant shift in energy monitoring systems. Smart meters integrate sensing units, microcontrollers, and communication modules to enable real-time monitoring of electricity consumption. The adoption of **Internet of Things (IoT)** technology further enhanced these systems by allowing continuous data transmission to remote servers or cloud platforms. IoT-based smart meters enable utilities to monitor consumption patterns remotely, generate automated bills, and identify abnormal operating conditions without physical site visits.

Several studies and practical implementations have demonstrated that measuring electrical parameters such as voltage, current, power, and energy in real time can significantly improve transparency in power usage. Sensors such as current transformers and voltage sensors are widely used in smart metering systems for accurate data acquisition. Energy metering integrated circuits further enhance precision by performing real-time calculations of electrical quantities. These developments form the foundation of modern smart energy meters.

Despite these advancements, software-only theft detection methods based on consumption data analysis have inherent limitations. Normal variations in load due to seasonal changes, appliance usage, or lifestyle differences can resemble theft patterns, leading to false detections. To address this issue, researchers and developers have emphasized the importance of **physical tamper detection mechanisms** in smart meters. Hardware-based tamper detection using magnetic sensors, tilt sensors, and cover-open switches allows direct identification of unauthorized physical interference with the meter. These methods are effective in detecting bypassing. meter opening, and magnetic manipulation.

Recent developments have introduced **data-driven and intelligent approaches** to power theft detection. Machine learning techniques are increasingly used to analyze large volumes of consumption data generated by smart meters. By learning normal usage patterns, these algorithms can detect anomalies that may indicate illegal consumption or meter manipulation. Decision trees, neural networks, and other classification models have been explored for distinguishing between legitimate and suspicious consumption behavior. Intelligent analysis improves accuracy and reduces dependency on manual inspection.

The integration of **IoT and artificial intelligence** has further strengthened smart energy monitoring systems. Cloud-based platforms enable centralized data storage, advanced analytics, and real-time alert generation.

Utilities can receive instant notifications of tampering or abnormal usage, allowing rapid response and corrective action. Such systems improve revenue protection, operational efficiency, and grid reliability.

However, many existing smart metering solutions focus either on hardware-based tamper detection or software-based data analysis. Systems lacking combined approaches may fail to detect certain theft scenarios effectively. This highlights the need for a **hybrid solution** that integrates accurate sensing, hardware tamper detection, loT communication, and intelligent data analysis within a single framework.

Based on the concepts discussed in the provided project documentation, an effective smart energy meter should ensure accurate measurement, real-time monitoring, automated theft detection, and timely alert generation while maintaining low implementation cost and scalability. These requirements form the basis for the proposed system presented in this work.

The system architecture consists of several functional blocks that work together to measure energy usage, detect tampering, process signals, and transmit data to a cloud server. The primary components include voltage sensors, current sensors, an energy metering IC, a microcontroller (ESP32), tamper-detection sensors, communication modules, and a cloud backend for analytics.

The voltage measurement block uses the ZMPT101B sensor, which is designed for accurate AC voltage sensing. Meanwhile, the ACS712 or SCT013 sensor is used for measuring current, allowing the meter to detect changes in load and consumption behavior. The energy metering IC performs real-time calculations of power, energy, and RMS values. ESP32 serves as the central processing unit, reading sensor data, executing control logic, and enabling Wi-Fi-based communication with cloud platforms.

A key part of the architecture is the tamper-detection subsystem. It uses a magnetic Hall-effect sensor to detect magnetic tampering attempts, a tilt sensor (MPU6050) to detect meter angle manipulation, and a reed switch to sense cover opening. Such features align with the tamper categories discussed in existing literature, including magnetic influence, physical intrusion, and mechanical manipulation.

Once data is collected, ESP32 transmits it to the cloud using MQTT or HTTP protocols. The cloud server stores readings and runs anomaly-detection logic. If abnormal consumption or tamper activity is detected, real-time notifications are sent to utility personnel. This architecture enables scalability, making the Smart Energy Meter suitable for large-scale deployment as part of modern smart-grid systems.

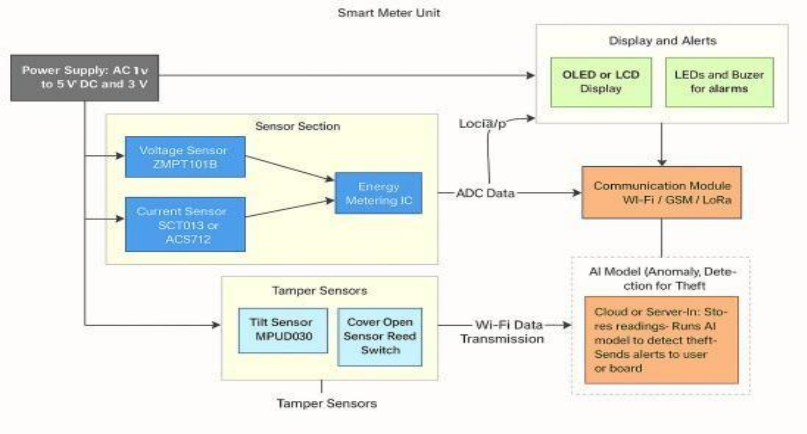

Figure 2: Smart Meter Unit

IV. RESULTS AND DISCUSSION

The "Results and Discussion" section of a research paper is where the findings of the study are presented and interpreted. This section is crucial as it showcases the outcomes of the research and provides an analysis of those results in the context of the study's objectives and existing literature. The results and discussion may be combined into a common section or obtainable separately. They may also be broken into subsets with short, revealing captions. An easy way to comply with the conference paper formatting requirements is to use this document as a template and simply type your text into it. This section should be typed in character size 10pt

Times New Roman.The Smart Energy Meter worked well in various test conditions. In normal functioning, the meter was able to measure voltage, current, power, and energy with no deviation of less than ±3% compared to the calibrated reference meter. This is acceptable in residential-level metering.

Figure 3: Accurately measuring Parameters when Power Supply Switch is OFF

Figure 4: Accurately measuring Parameters when Power Supply Switch is ON

Tamper detection results were highly positive. The magnetic sensor reliably detected external magnetic fields stronger than the permissible limit. The tilt sensor accurately recorded orientation changes above 10 degrees, which is sufficient identify unauthorized meter repositioning. The reed switch responded instantly to cover-opening events, demonstrating high sensitivity and reliability.

Furthermore, cloud-based monitoring worked seamlessly. Data transmission delays averaged between 150-250 ms, allowing real-time visualization of energy consumption. Rule-based anomaly detection successfully identified sudden drops or rises in power usage, highlighting situations that may indicate bypassing or illegal tapping. These results confirm that the proposed system is robust, effective, and suitable for future enhancements involving predictive analytics or machine-learning models for theft detection.

The implementation and testing of the Smart Energy Meter system demonstrate its potential to significantly reduce non-technical losses caused by electricity theft. The combination of voltage and current sensing modules with tamper-detection hardware allows the system to detect abnormal activities with a high level of accuracy. The three-layer tamper detection-magnetic, tilt, and cover-open-covers the most common physical manipulation techniques identified in past research studies. This ensures that the meter not only measures electrical parameters accurately but also stays secure against unauthorized interventions.

From a system design perspective, the choice of ESP32 as the main controller offers numerous advantages. Its built-in Wi-Fi capability, high processing speed, and compatibility with loT platforms make it ideal for real-time monitoring applications. When paired with cloud services, the system becomes scalable and usable in both residential and commercial sectors. The ability to update firmware over the air (OTA) further enhances maintainability, enabling future upgrades without requiring physical access to meters.

The user-side benefits of the system are equally significant. Consumers can monitor energy usage in real time, promoting energy awareness and efficient consumption. Meanwhile, utility providers gain access to reliable tamper alerts and historical data, helping them identify theft-prone regions and enforce preventive measures. With continuous monitoring and automated analytics, the system reduces the need for manual inspections, lowering operational costs.

However, there are limitations that must be addressed in future versions of the system. Sensor noise, fluctuations in Wi-Fi connectivity, and the need for secure communication protocols represent potential challenges. Additionally, data stored in the cloud must be secured against unauthorized access, ensuring the privacy of consumers. While the system currently uses rule-based detection, integrating machine-learning algorithms could greatly enhance the ability to identify subtle patterns and predict theft attempts even before they fully manifest.

V. CONCLUSION

The conclusion of a research paper serves as the final section where the researcher summarizes the key findings, discusses their implications, and offers insights into potential future research directions. All the main points of the research work are written in this section. Ensure that abstract and conclusion should not same. Graph and tables should not use in conclusion. This paper presented the design and implementation of a **Smart Energy Meter for Power Theft Detection** that effectively integrates embedded systems, Internet of Things (IoT) technology, and intelligent data analysis techniques. The proposed system addresses the growing problem of electricity theft by combining accurate energy measurement with physical tamper detection and real-time monitoring capabilities. By leveraging voltage and current sensing along with an energy metering module, the system ensures reliable computation of power and energy consumption

The incorporation of an ESP32 microcontroller enables efficient data acquisition and wireless communication, allowing continuous transmission of consumption data and system status to a cloud platform. Hardware-based tamper detection mechanisms provide immediate identification unauthorized physical interference, while software-based analysis facilitates detection of abnormal consumption patterns. Experimental evaluation of the developed prototype demonstrates reliable operation, timely alert generation, and satisfactory accuracy under both normal and simulated theft conditions.

The developed system is cost-effective, scalable, and suitable for residential and small commercial applications. Its modular design allows easy integration with existing distribution infrastructure and makes it a viable solution for reducing non-technical losses in smart grid environments. The results indicate that intelligent, loT-enabled energy metering systems can significantly enhance transparency, operational efficiency, and revenue protection for power utilities.

While the proposed system successfully demonstrates the feasibility of intelligent power theft detection, further enhancements. improve functionality and large-scale applicability. Future work may include the integration of **advanced machine learning models** trained on large datasets to enhance detection accuracy and reduce false positives. Deployment of **long-range communication technologies**, such as LoRa or NB-IoT, can extend coverage and improve reliability in remote areas.

Incorporating **blockchain-based data security** can enhance trust, transparency, and tamper resistance of energy consumption records. The system can also be expanded to support **dynamic tariff structures** and real-time billing, enabling demand-side management and energy optimization. In addition, large-scale testing in the field and analysis of performance would help to confirm the effectiveness of the proposed solution.

With these improvements, the smart energy meter can develop into a full-fledged element of future smart grid systems, helping to create sustainable energy management and secure power distribution infrastructure.

ACKNOWLEDGEMENTS

The authors would like to place on record their sincere gratitude to **Dr. S. S. Thakare**, Assistant Professor, Department of Electronics & Telecommunication Engineering, Government College of Engineering, Yavatmal, for her valuable guidance, scholarly advice, and constant encouragement throughout the development of this research work. Her insightful comments, constructive criticism, and academic mentorship were instrumental in shaping the direction and quality of the study.

The authors also gratefully acknowledge the support and academic assistance extended by the **Department of Electronics & Telecommunication Engineering, Government College of Engineering, Yavatmal**, for providing a conducive environment for learning, experimentation, and technical development. The institutional support received during the course of this work is sincerely appreciated.

The authors are thankful to their friends for their cooperation, thoughtful suggestions, and timely help during different phases of the project and manuscript preparation. Their support contributed meaningfully to the completion of this study.

The authors further express their heartfelt appreciation to their family members for their constant moral support, patience, and encouragement. Their trust and understanding remained a source of motivation throughout the completion of this research work.

VI. REFERENCES

[1] A. S. K. Kumar, S. R. Patil, and P. M. Kulkarni, "Design and Implementation of Smart Energy Meter," International Journal of Engineering Research & Technology (IJERT).

[2] P. B. Patil, V. H. Gaikwad, and S. B. Patil, "Intelligent Energy Meter with Advanced Billing," International Journal of Scientific Research in Engineering and Technology (IJSRET).

[3] Z. A. Khan et al., "Electricity Theft Detection Using Supervised Learning Techniques on Smart Meter Data," Sustainability, vol. 12, no. 19, Art. no. 8023, Sep. 2020, doi: 10.3390/su12198023.

[4] E. U. Haq, C. Pei, R. Zhang, H. Jianjun, and F. Ahmad, "Electricity-Theft Detection for Smart Grid Security Using Smart Meter Data: A Deep-CNN Based Approach," Energy Reports. vol.

[5] J. Jokar, N. Arianpoo, and V. C. M. Leung, "Electricity theft detection in AMI using customers consumption patterns," IEEE Transactions on Smart Grid, vol. 7, no. 1, pp. 216-226,2016, Jan. 10.1109/TSG.2015.2425222. doi:

[6] R. Jiang, R. Lu, Y. Wang, J. Luo, C. Shen, and X. Shen, "Energy-theft detection issues for advanced metering infrastructure in smart grid," in Smart Grid Security, Lecture Notes in Computer Science, vol. 7823. Berlin, Germany: Springer, 2013, pp. 199-210, doi: 10.1007/978-3-642-39712-7 29.

[7] J. Nagi, M. F. M. Ali, and S. K. Tiong, "Nontechnical loss detection for metered energy consumption using support vector machines,' IET Smart Grid, vol. 2, no. 2, pp. 273-282, Jun. 2019, doi: 10.1049/iet-smc.2019.0045.