DATE

UNIT - III

1st Oct 19

Single ended voltage? Measuring voltage at a particular pt wrt to some pt

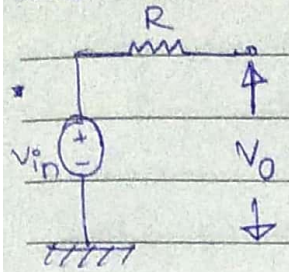

$V_0 = V_{in} \mp I_0 R_0$

$V_{in} - (0) R_0 = V_{in}$

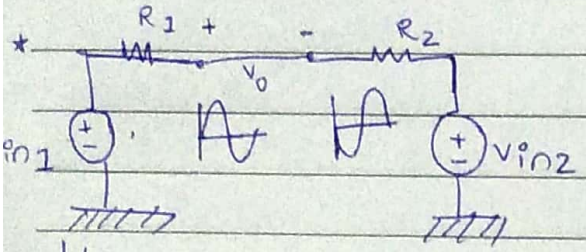

$V_0 = V_{in} - V_{in2}$

Double ended voltage

* Measuring potential betn 2 nodes, if they are of same amplitude and opposite in the phase ⇒ DIFFERENTIAL OP VOLTAGE
* We get only when we gave i/p of opposite (differential i/p signal)

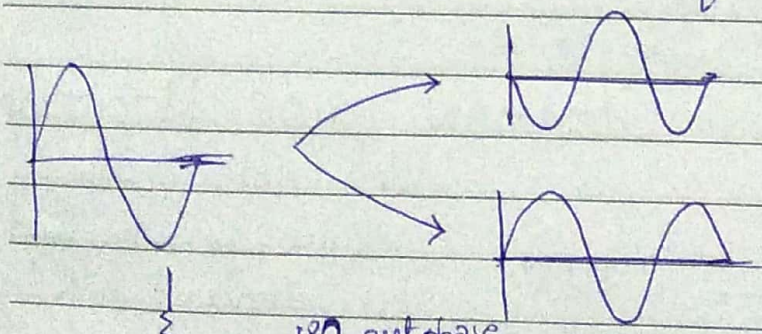

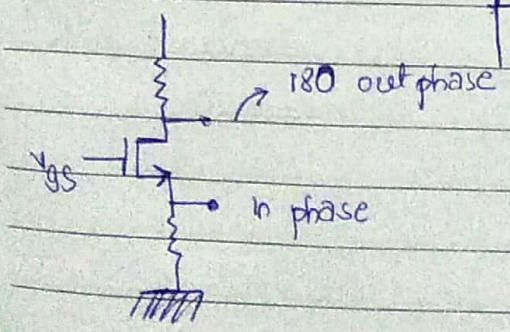

* Signal should its level should one remain same (Average value), Common mode level for the DOV.
* If we shift one value of signal other also should be ~~heard~~ shifted

Scanned by CamScanner

DATE

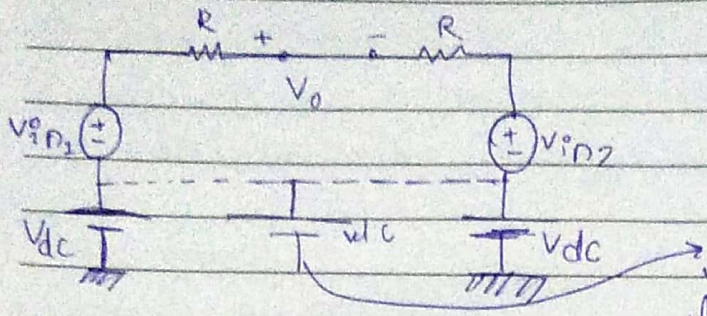

acts like common supply for both the transistors

$V_0 = V_{in} + \cancel{V_{dc}} - V_{in_2} - \cancel{V_{dc}} = V_{in_1} - V_{in_2}$

Common mode supply :- If we use this we are thinking about dc supply

* Why this is Imp ?

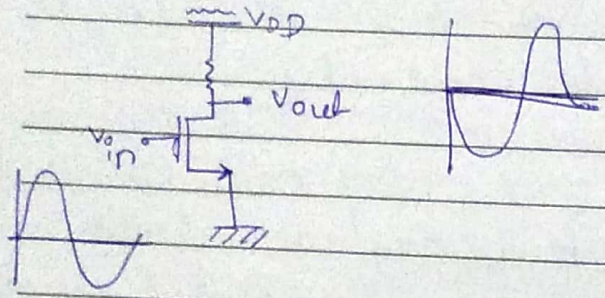

Amplified difference of in signal

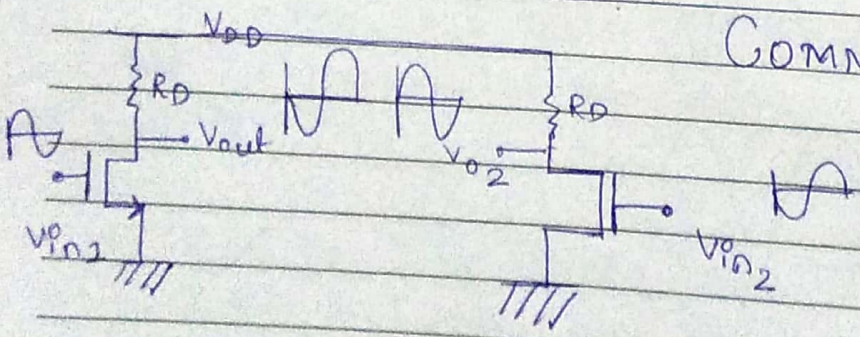

COMMON MODE REJECTION

Here noise is the common for the both ckts, hence it will be removed

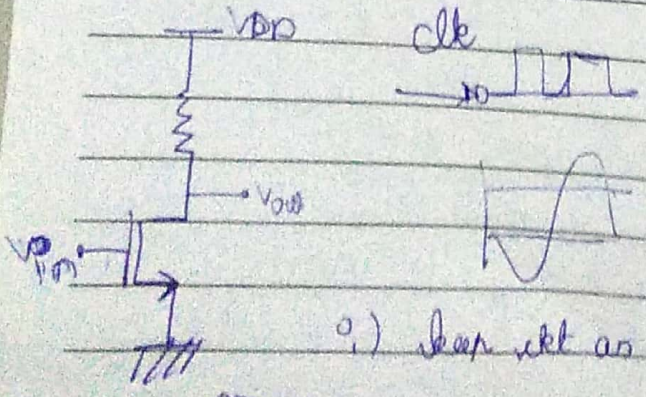

how to overcome this

i) keep ckt as it is, put clk in left hand side

ii) source differential

Scanned by CamScanner

DATE

3rd Oct' 19

1) Common DC level

2) Should be of same amplitude & opposite ~~way~~ in phase

COMMON MODE ANALYSIS.

BASIC DIFFERENTIAL PAIR:

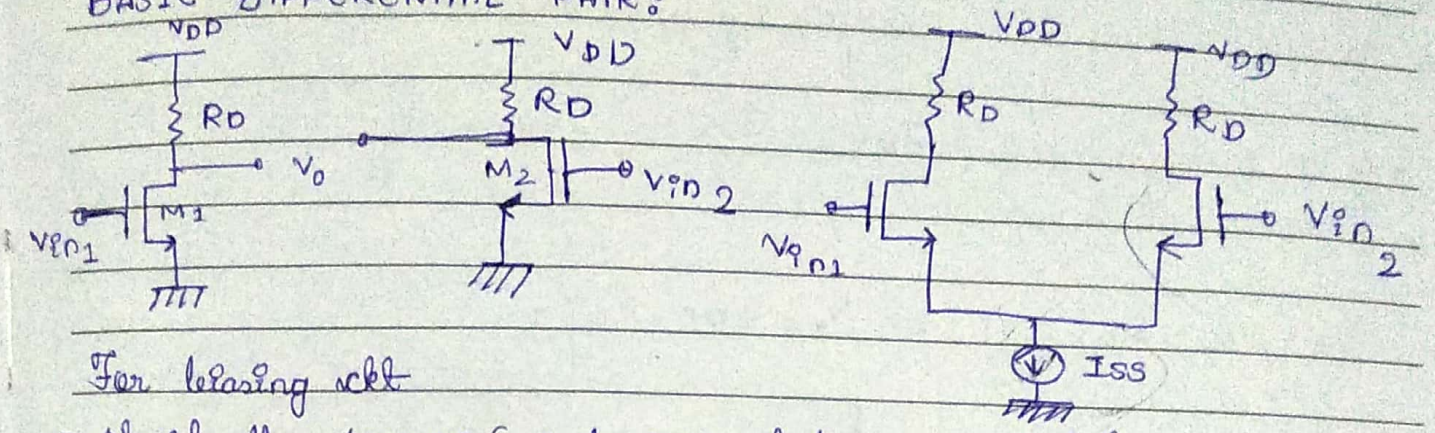

For biasing ckt

→ short the sources & put current source & gnd it

I_{SS} → Source to Source current

→ realize the current source by the one more transistor

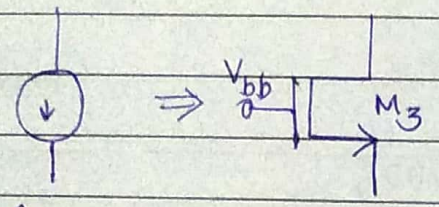

→ How do we bias all the three in Satⁿ region / biasing?

common mode DC level

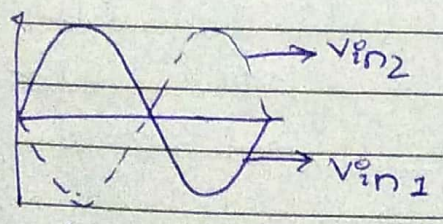

to maintain in same dc level

ADVANTAGE of differential amplifier is

- higher immunity to "environmental noise"
- Increase in max. out voltage swing
- simpler biasing & higher linearity
- high rejection of supply noise,
- higher output swings

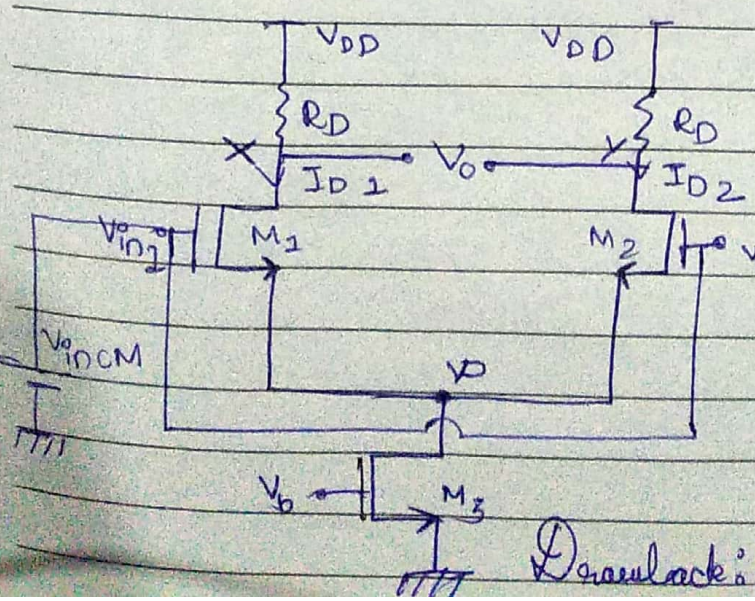

Drawback: Carry twice as much area as

Scanned by CamScanner

DATE

$V_{in\,CM} \neq 0$ [if $=0$, it will not conduct]

What is least value of $V_{in\,CM}$ so that M_3 will also in Sat^n?

* If we draw a middle line it is exactly symmetric
* Assume I_{D1} & I_{D2} are flowing w.r.t M_1 & M_2 at node P.

$I_3 = I_1 + I_2$

* If it is symmetric $I_{D1} = \frac{I_{SS}}{2}$ & $I_{D2} = \frac{I_{SS}}{2}$
* $V_{in\,CM}$ minimum = ?

$$V_x = V_{DD} - R_D\left(\frac{I_{SS}}{2}\right) \Rightarrow V_y = V_{DD} - R_D\left(\frac{I_{SS}}{2}\right)$$

* Minimum potential should be one V_{th} than the V_{out}.
* To keep M_3 to be in saturation

$V_P \geq V_{GS3} - V_{th}$

* $V_{in\,CM_{min}} \geq V_{GS1} + (V_{GS3} - V_{th})$
* $Max(V_{in\,CM}) = \{(V_{DD} + V_{th1} - R_D I_{SS}/2), V_{DD}\}$ — So this the only max bound?

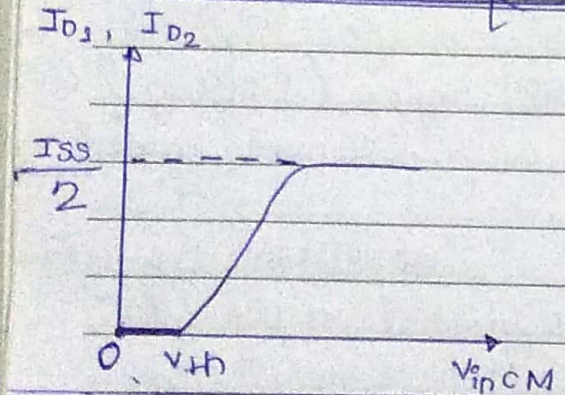

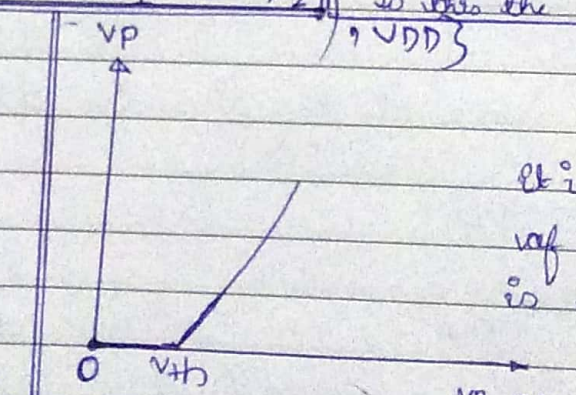

It is independent of V_{DS}, current is constant

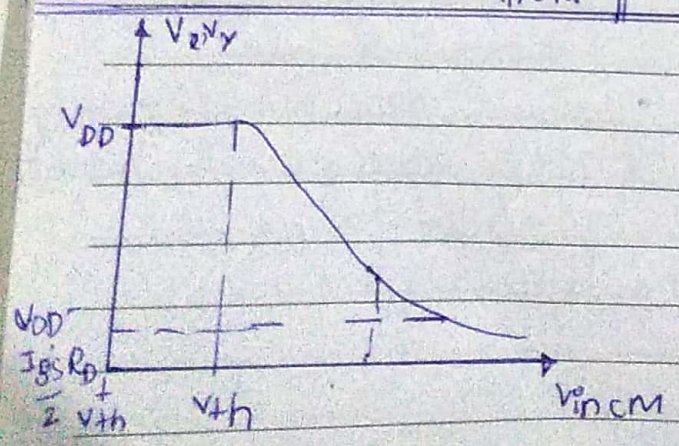

$V_{in\,CM} = 0$ $\quad I_{D1,2} = 0$

$V_{in\,CM} = V_{th}$ $\quad I_{D1,2}$ = shootup at V_{th}

PES

Scanned by CamScanner

DATE

QUALITATIVE ANALYSIS

DIFFERENTIAL MODE CHARACTERSTICS

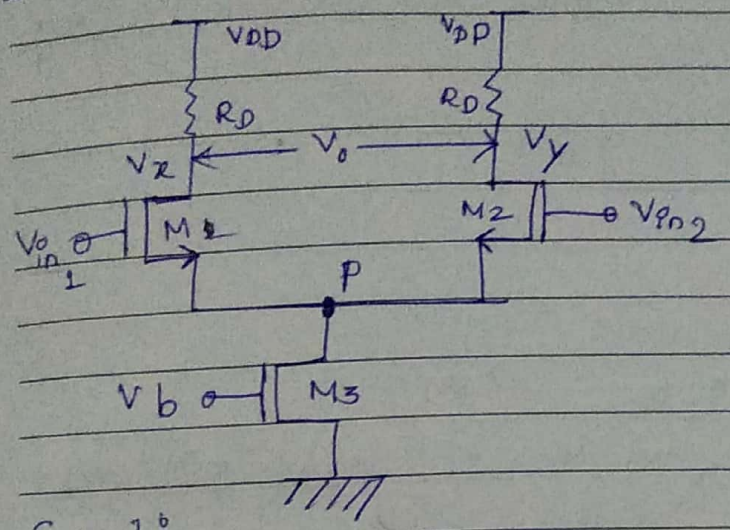

Here $V_{in1} \neq V_{in2}$

Case 1:

* Assume $V_{in1} - V_{in2}$ is negative if V_{in1} is lesser than V_{in2} or $V_{in} = 0$ case then my M_1 is in cut off & M_2 is on, we already learned on now $I_{D1} = 0$; $I_{D2} = I_{SS}$ then my $V_{DD} = V_x$.

$V_y = V_{DD} - I_{SS}R_D$

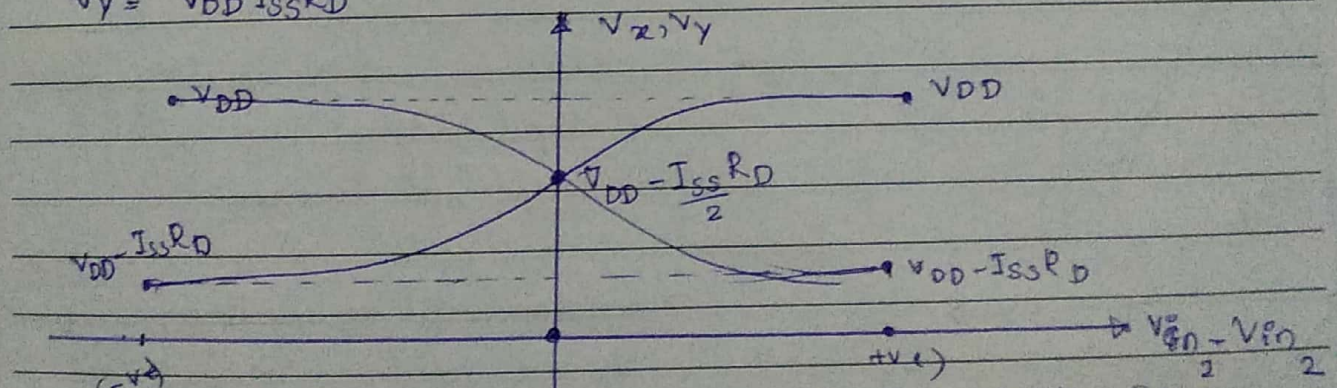

Differential characterstics for node V_x & V_y

• Max & Min levels = V_{DD} & $V_{DD} - R_D I_{SS}$, independent of ip CM

Case 2:-

If $V_{in1} - V_{in2}$ = positive then my M_1 is on & M_2 is off then my

$I_{D1} = I_{SS}$ & $I_{D2} = 0$

$V_x = V_{DD} - I_{SS}R_D$ $\quad V_y = V_{DD}$

When $V_{in1} - V_{in2} = 0$ my $V_x = V_y = V_{DD} - \frac{I_{SS}R_D}{2}$

$V_x - V_y = 0$

Scanned by CamScanner

DATE

If we vary $V_{in1} - V_{in2}$ from $-\infty$ to $+\infty$

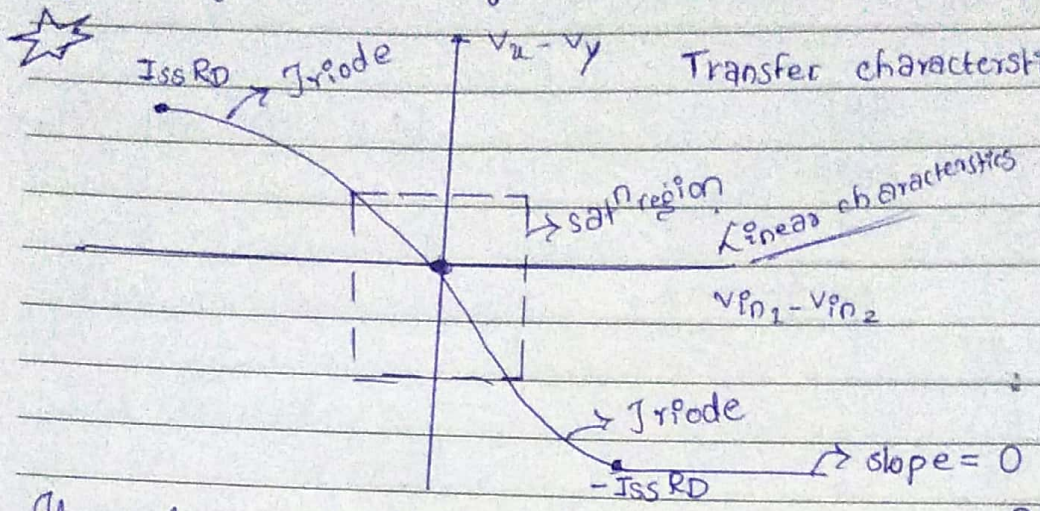

★ If we keep on ↑ $V_{in\,CM}$, V_{DS} of M_1 & M_2 will reduce due to high drop & it enters into triode region

Oct' 5th 2019.

$$V_{GS_1} + (V_{GS_3} - V_{th}) \leq V_{in\text{-}CM} \leq \min\left(V_{DD} - R_D \frac{I_{SS}}{2} + V_{TH_1},\ V_{DD}\right)$$

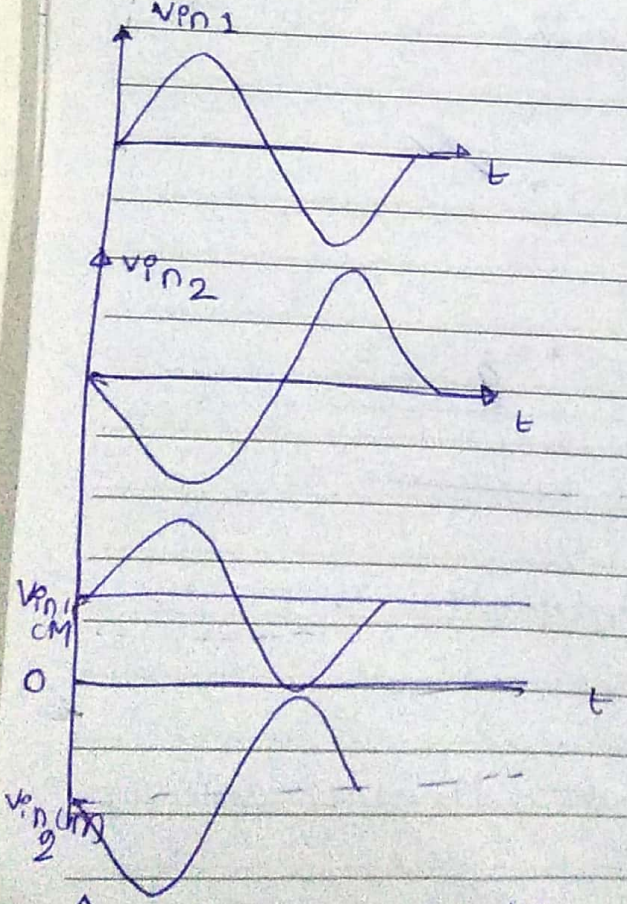

★ We cannot use large Differential Input signal no gain, because slope will be zero

★ resistors will occupy larger space so we can't use in IC, basic diff diagram is not final

★ How do we generate V_b, how do we bias?

slope more = $V_{in} = V_{in}$

ckt become more non-linear as if voltage swing ↑

Scanned by CamScanner

DATE

** Go through derivation of Large signal model gain ?

GAIN CALCULATION :-

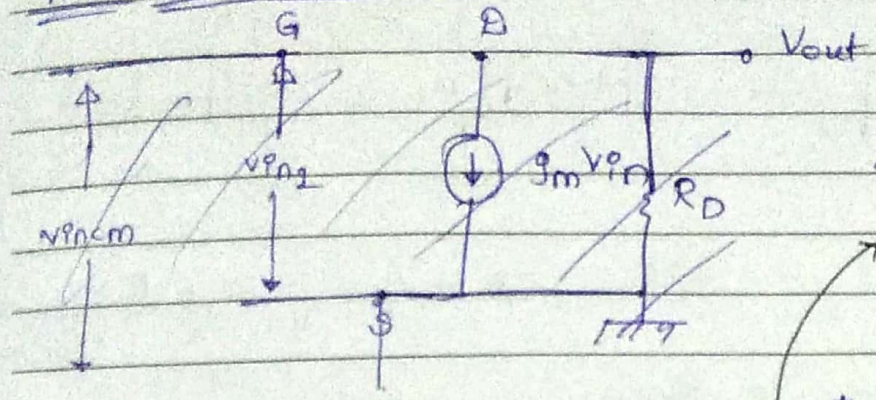

As far as differential i/p is concerned & AC analysis the current remains constant as well as Voltage.

* If we tries to ↑ the very around 1mV in V_{in1} at V_{in2} my voltage reduces.

$$A_v = \frac{V_o}{V_{in1} - V_{in2}} = \frac{V_x - V_y}{V_{in1} - V_{in2}}$$

* Let us treat V_P as AC ground

$$\frac{V_{out}}{V_{in}} = -g_m R_D$$ ✓ this is AC part

$$V_{out} = -g_m R_D V_{in}$$

$$V_x = -g_m R_D (V_{in1})$$
$$V_y = -g_m R_D (V_{in2})$$

$$V_x - V_y = -g_m R_D (V_{in1}) + g_m R_D (V_{in2})$$
$$= g_m R_D (V_{in2} - V_{in1}) \longrightarrow g_m R_D (\text{diff inp volt})$$

$$A_v = \frac{-g_m R_D \cancel{(V_{in1} - V_{in2})}}{\cancel{(V_{in1} - V_{in2})}}$$

$$\boxed{A_v = -g_m R_D}$$

* The M_3 is taken gnd, as the current how much is entering into that the same amt taken out hence it is constant current source

If $V_{in2} = -V_{in1}$

$$A_v = -2 g_m R_D$$

This holds good only for the AC i/p differential input & V_P act as virtual ground

Scanned by CamScanner

DATE

09 Oct '19

The ckt can be now formed as

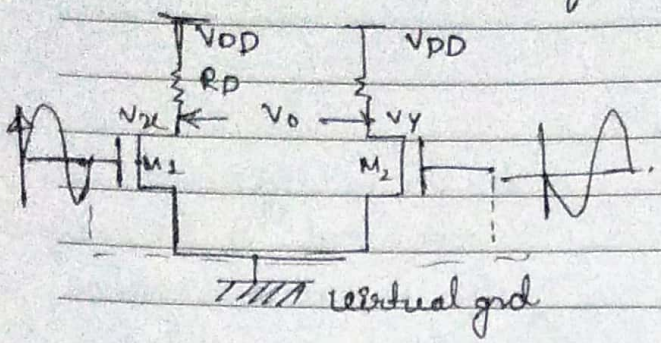

HALF CKT ANALYSIS :-

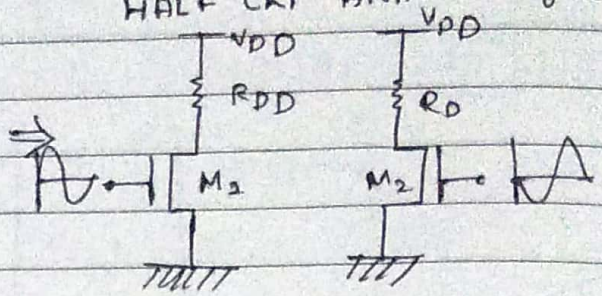

1) One method for finding Differential Gain

2) One more method of finding the A_{VD}, we can also use Superposition theorem.

COMMON MODE RESPONSE:-

I_{SS} role :- supress the effect of i/p CM level variation on operation of M_1 & M_2 & the o/p level

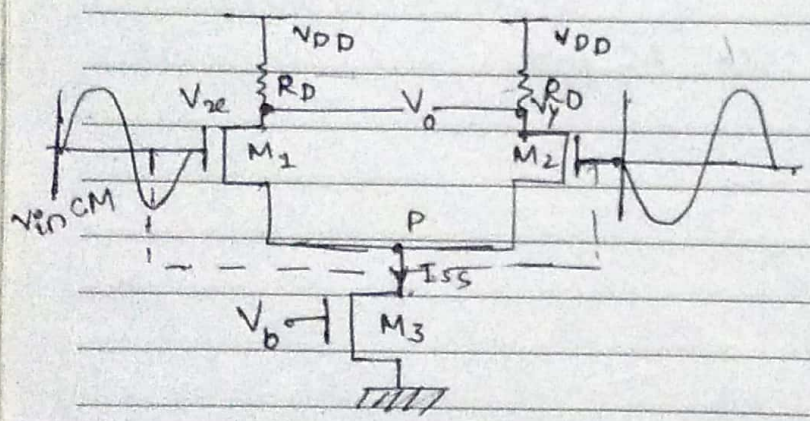

* In practical cases, both transistors may not be symmetric
* Ideal current source will not be there in practical cases so we get some amount of finite resistance.

Now assume somehow we constructed symmetric transistor but still ideal current source will not be true, take that into an account add RSS over there

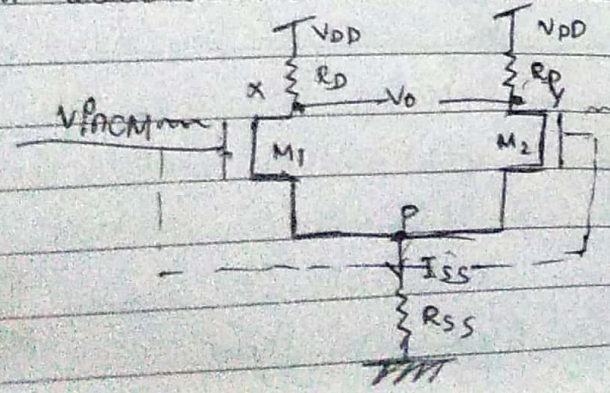

PES UNIVERSITY

Scanned by CamScanner

DATE

Assume from neighbouring ckts some noise to this & it is not DC level signal.

Now what happen to our Differential amplifier?

As the input given is common to both, as $V_{in}x \uparrow$ & $V_y \uparrow$ in the same direction, short those

* R_D of both resistor will be parallel to each other $R_D/2$

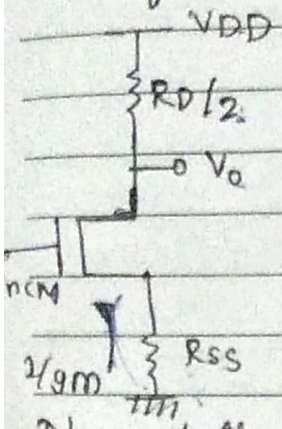

$$A_v = \frac{-R_D}{R_S} = \frac{-R_D/2}{1/2g_m + R_{SS}}$$

$$= \frac{-g_m R_D}{1+2g_m R_{SS}}$$

Now both transistor added length is same but width is doubled $\frac{W}{L} = \frac{1}{g_m}$ $\frac{2W}{L} = \frac{1}{2g_m}$

$$A_{v\,CM} = \frac{-g_m R_D}{1+2g_m R_{SS}}$$

10th Oct' 19

Q: For the following circuit assume $V_{DD} = 3V$, $\mu_n C_{ox} = 50\ \mu A/V^2$, $\frac{W}{L} = \frac{25}{0.5}$ & $I_{SS} = 1mA$, $V_{th} = 0.6$, $V_D = 0.5$

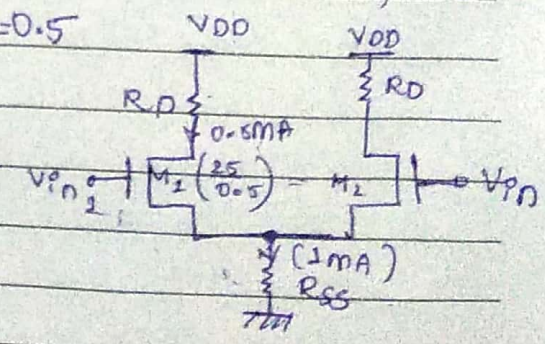

Soln: i) Calculate $V_{in\,CM}$ to maintain voltage drop of 0.5 across R_{SS}

$$V_{in\,CM} = V_{DD} + V_{th} - R_D \frac{I_{SS}}{2}$$

$$V_{gs1} + (V_{gs3} - V_{th})$$

$$V_{DD} = V_{DS} - V_{gs}$$

$$V_{DS}$$

$$I_D = \frac{1}{2}\mu_n C_{ox} \frac{W}{L}(V_{gs} - V_{th}) = \frac{1}{200}(= 0.012$$

$$I_D = 0.5mA = \frac{1}{2} \times 200 \times 10^{-6} \times \frac{25}{0.5}(x - 0.6)^2$$

Scanned by CamScanner

DATE

$$0.5 = 100 \times 10^{-6} \times \frac{25}{0.5} (x - 0.6)^2$$

$$0.5 = \frac{1}{200} (x - 0.6)^2$$

$$100.0 = (x - 0.6)^2$$

$$10 = x - 0.6$$

$$x =$$

$V_{gS} = 1.23V$

$V_{in\,CM} = 1.78V$

(ii) If $A_v = 5$

$R_D = ?$

$$g_m = \frac{2 I_D}{V_{gs} - V_{th}} = \cancel{3.174 \times 10^{-3}} \quad \cancel{1.587 \times 10^{-3}}$$

$$= 1.587 \times 10^{-3}$$

$$\cancel{g_m = \frac{I}{V} = 0.5 \times 10^{-3}}$$

$$= \sqrt{2 I_D \mu_n C_{ox} \frac{W}{L}}$$

$$A_v = - g_m R_D$$

$$\frac{5}{+1.587 \times 10^{-3}} = -R_D = -3.15 k\Omega$$

(iii) Where exactly this located in saturation region

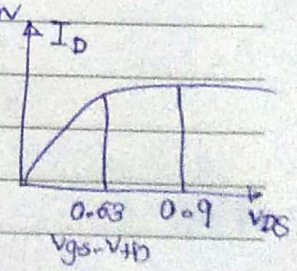

$V_{gs} = \cancel{V_D - V_S}$ $\quad V_{gs} - V_{th}$

$1.23 - 0.6 = 0.63$

$$V_D = V_{DD} - I_D R_D$$

$$= 3 - 0.5 \times 10^{-3} \times 3.15 \times 10^{3}$$

$$= 1.4$$

$$V_{DS} = V_D - V_S$$

$$= 1.4 - 0.5$$

$$= 0.9V$$

We are 0.27V away from saturation

iv) Calculate output if CM input voltage is increased by 50mV & V_{in}:

$V_{in\,CM} = 1.78V$

Scanned by CamScanner

DATE

$V_{inCM} = V_{gs} + V_P$

$1.78 = x + 0.5$

$V_{gs} = 1.28\,V$

0.12
$= 120$

$R_D = ?$ $\quad g_m = \dfrac{2 \times 0.5 \times 10^{-3}}{1.28 - 0.6} = 1.471 \times 10^{-3} = R_D = 3.4 \times 10^3$

3.401

3.399

$V_{gs} - V_{th} = 1.28 - 0.6 = \underline{0.68}$

$V_D = V_{DD} - I_D R_D \Rightarrow 3 - 0.5 \times 10^{-3} \times \cancel{0.6}\ \cancel{1.47}\ 3.4 \times 10^3$

$3 - 0.5 \times 3.4 = 1.31$

$V_{DS} = 1.31 - 0.5 = 0.81$

$0.81 - 0.68 = 0.13 = 130\,mV$

$V_{inCM} = 1.78\,V$

$V_{out} = \cancel{V_{DD}}$

$A_c = \dfrac{-g_m R_D}{1 + 2 g_m R_{SS}}$

change in the op voltage $= \boxed{(50\,mV)(A_c)}$

$R_{SS} = 500\,\Omega$

$g_m = 1.58 \times 10^{-3}$

$R_D = 3.15 \times 10^{-3}$

$= 50 \times 10^{-3} \left(\dfrac{-1.58 \times 10^{-3} \times 3.15 \times 10^{+3}}{1 + 2(1.58 \times 10^{-3})(500)} \right)$

$= 50 \times 10^{-3} (1.929)$

$= 96.4\,mV$

Input is increased means, output is decreases

(NOT THERE IN SYLLABUS CBT)

COMMON MODE RESPONSE DUE TO MISMATCH IN RD

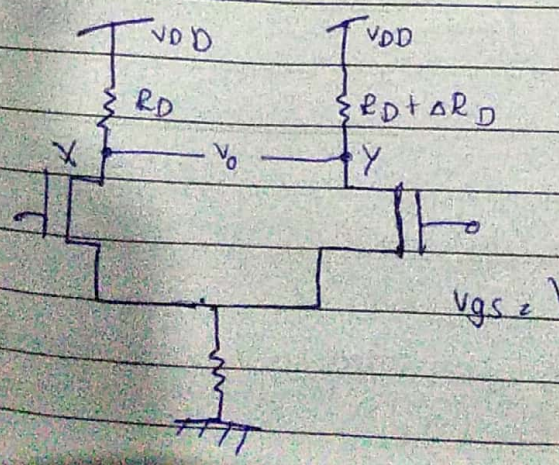

$V_x = -g_m R_D (V_{inCM} - V_P)$

$V_Y = -g_m R_{D+\Delta R_D} (V_{inCM} - V_P)$

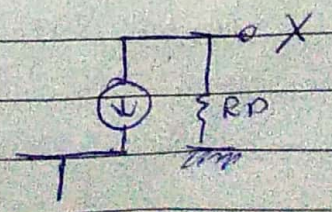

CSA INCLUDED

Scanned by CamScanner

DATE

$V_{out} = V_x - V_y$ = we will see getting some output

Common mode response due to mismatch due to M_1 & M_2

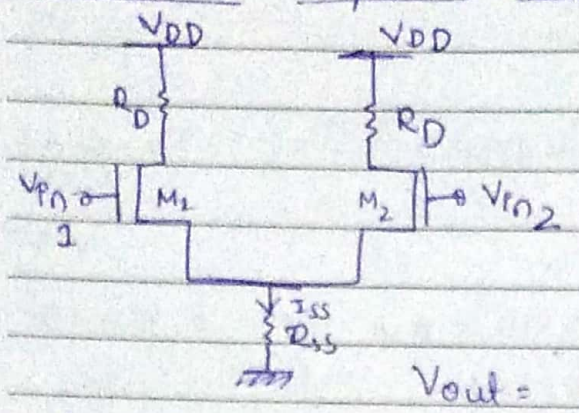

$$V_x = \frac{R_D}{\frac{1}{g_{m1}} + \frac{1}{g_{m2}}}$$

$$V_x = -g_{m1} R_D (V_{inCM} - V_P)$$

$$V_y = -g_{m2} R_D (V_{inCM} - V_P)$$

$$V_{out} = -g_{m1} R_D (V_{inCM} - V_P) + g_{m2} R_D (V_{inCM} - V_P)$$

$$V_P = I_{SS} \times R_{SS}$$

$$= (I_{D1} + I_{D2}) \times R_{SS}$$

$$I_{D1} = g_m V_{gs}$$

$$= g_{m1} (V_{inCM} - V_P)$$

$$I_{D2} = g_{m2} (V_{inCM} - V_P)$$

$$= \left[g_{m1} (V_{inCM} - V_P) + g_{m2} (V_{inCM} - V_P) \right] \times R_{SS}$$

$$V_P = [g_{m1} + g_{m2}][V_{inCM} - V_P] R_{SS}$$

$$V_P = [g_{m1} + g_{m2}][V_{inCM} R_{SS} - V_P R_{SS}]$$

$$V_P = g_{m1} V_{inCM} R_{SS} - g_{m1} V_P R_{SS} + g_{m2} V_{inCM} R_{SS} - g_{m2} V_P R_{SS}$$

$$V_P = V_{inCM} R_{SS} [g_{m1} + g_{m2}] - V_P R_{SS} [g_{m1} + g_{m2}].$$

$$V_P + V_P R_{SS} [g_{m1} + g_{m2}] = V_{inCM} R_{SS} [g_{m1} + g_{m2}]$$

$$V_P [1 + R_{SS} (g_{m1} + g_{m2})] = V_{inCM} R_{SS} (g_{m1} + g_{m2})$$

$$V_P = \frac{V_{inCM} R_{SS} (g_{m1} + g_{m2})}{1 + R_{SS} (g_{m1} + g_{m2})}$$

$$V_x = -g_{m1} R_D (V_{inCM} - V_P)$$

$$= -g_{m1} R_D \left(V_{inCM} - \frac{V_{inCM} R_{SS} (g_{m1} + g_{m2})}{1 + R_{SS} (g_{m1} + g_{m2})} \right)$$

$$= -g_{m1} R_D \left[\frac{V_{inCM} + V_{inCM} R_{SS} (\cancel{g_{m1}} + g_{m2}) - V_{inCM} R_{SS} (\cancel{g_{m1}} + g_{m2})}{1 + R_{SS} (g_{m1} + g_{m2})} \right]$$

PES

Scanned by CamScanner

DATE

$$= \frac{-g_{m1} R_D V_{inCM}}{1 + R_{SS}(g_{m1} + g_{m2})}$$

$$\text{lly} \quad V_y = \frac{-g_{m2} R_D V_{inCM}}{1 + R_{SS}(g_{m1} + g_{m2})}$$

$$V_{out} = V_x - V_y = \frac{-g_{m1} R_D V_{inCM}}{1 + R_{SS}(g_{m1} + g_{m2})} + \frac{g_{m2} R_D V_{inCM}}{1 + R_{SS}(g_{m1} + g_{m2})}$$

$$\Rightarrow \frac{R_D V_{inCM}}{1 + R_{SS}(g_{m1} + g_{m2})} \left[g_{m2} - g_{m1} \right]$$

$$A_v = \frac{V_x - V_y}{v_{in-CM}} = \frac{R_D \cancel{V_{inCM}} (g_{m2} - g_{m1})}{1 + R_{SS}(g_{m1} + g_{m2}) \cancel{(v_{in-CM})}}$$

$$= \frac{-\Delta g_m R_D}{1 + R_{SS}(g_{m1} + g_{m2})}$$

Which is more severe

- Mismatch in the transistor & R_D is more critical than the common thing

15th Oct '19

DIFFERENTIAL AMPLIFIER WITH MOS LOAD

Issue with R_D → occupy larger space

* we cannot construct the same value of, mismatch will be there

* replace R_D with diode connected device.

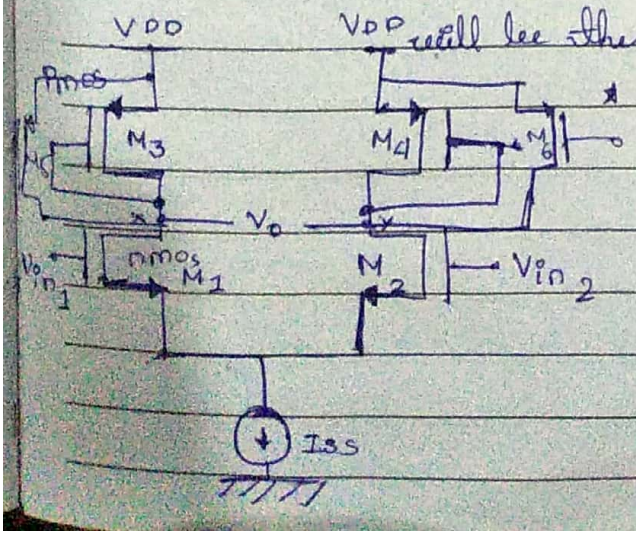

$$A_v = \frac{-g_{mn}}{g_{mp}}$$

$$= -\sqrt{\frac{(W/L)_n \mu_n}{(W/L)_p \mu_p}}$$

PES UNIVERSITY

Scanned by CamScanner

DATE

* Area is small but output swing limits reduces hence our A_v also reduces, how can we increase the gain
* We can now ↑ the value of $\left(\frac{W}{L}\right)_n$ value or ↓ the value of $\left(\frac{W}{L}\right)_p$

these are the only factors under control of designer
* If we ↓ $\left(\frac{W}{L}\right)_p$, our I_D will go down
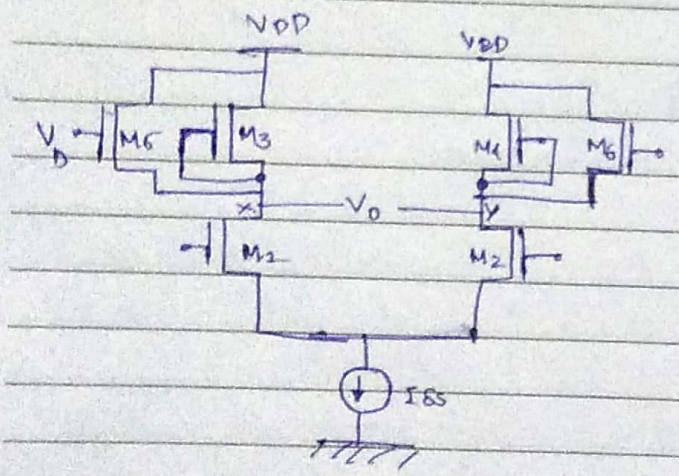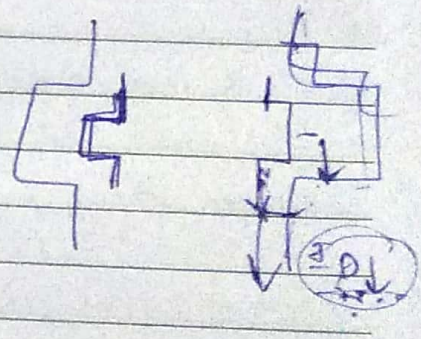
* Place two devices parallel to M3 & M4, devices are used as a current sources assume the add^n devices provide some amount of current will be provided in add^n to that current value of M3 & M4, hence now we can now decrease the $\left(\frac{W}{L}\right)_p$ ratio