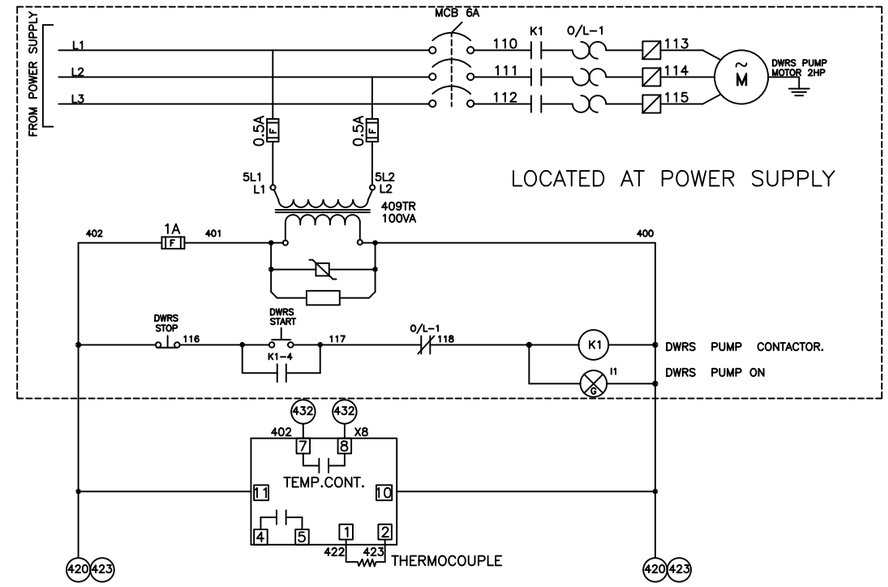

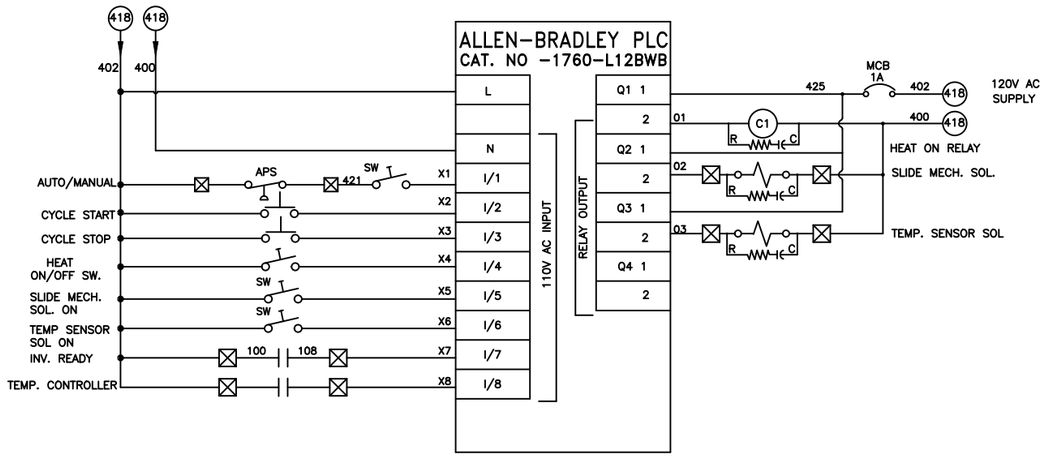

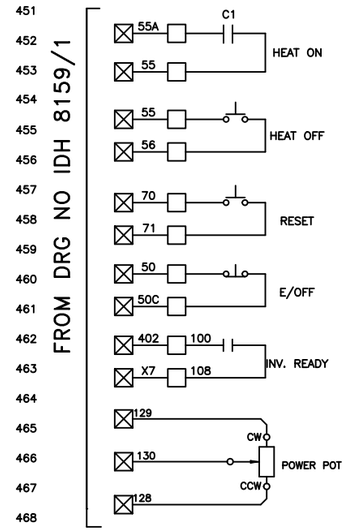

CABLE NO:-1 (5mt)

CABLE 2.5Sqmm. 4 CORE SHIELDED CABLE
POWER SUPPLY TO DWRS

P.S.	DWRS	
113 114 115 E	113 114 115 E	DWRS

CABLE NO:-2 (5mt)

CABLE 0.5Sqmm. 3 CORE SHIELDED CABLE
POWER SUPPLY TO RCB

P.S.	RCB	
129 130 128	129 130 128	POWER POT

CABLE NO:-3 (5mt)

CABLE 0.5Sqmm. 12 CORE PVC
POWER SUPPLY TO RCB

P.S.	RCB	
50 50C	50 50C	E/OFF
55 55A	55 55A	HEAT ON
55 56	55 56	HEAT OFF
70 71	70 71	RESET
100 108	402 X7	INV. READY
400 402	400 402	110V SUPPLY

FOR POWER SUPPLY-1

CABLE NO:-4 (5mt)

CABLE 0.5Sqmm. 2 CORE SHIELDED CABLE
RCB TO THERMOCOUPLE

RCB	TERMO COUPLE	
422(CABLE NO:-11) 423(CABLE NO:-10)	422 (CABLE NO:-11) 423(CABLE NO:-10)	THERMO COUPLE

A

CABLE NO:-5 (5mt)

CABLE 0.5Sqmm. 2 CORE SHIELDED CABLE
RCB TO SLIDE MECH

RCB	SLIDE MECH.	
02 400	A02 400(CABLE NO:-5)	SLIDE MECH.

A

CABLE NO:-6 (5mt)

RCB TO TEMPRATURE SENSORE

RCB	TEMP. SENSORE	
03 400 (CABLE NO:-4)	03 400 (CABLE NO:-4)	TEMP SEN. SOL

A

CABLE NO:-7 (5mt)

RCB TO AIR PRESURE SW.

RCB	APS	
402 421 (CABLE NO:-9)	402 421 (CABLE NO:-9)	APS

A

FOR POWER SUPPLY-2

CABLE NO:-1 (5mt)

CABLE 2.5Sqmm. 4 CORE SHIELDED CABLE
POWER SUPPLY TO DWRS

P.S.	DWRS	
113 114 115 E	113 114 115 E	DWRS

CABLE NO:-2 (5mt)

CABLE 0.5Sqmm. 3 CORE SHIELDED CABLE
POWER SUPPLY TO RCB

P.S.	RCB	
129 130 128	129 130 128	POWER POT

CABLE NO:-3 (5mt)

CABLE 0.5Sqmm. 12 CORE PVC
POWER SUPPLY TO RCB

P.S.	RCB	
50 50C	50 50C	E/OFF
55 55A	55 55A	HEAT ON
55 56	55 56	HEAT OFF
70 71	70 71	RESET
100 108	402 X7	INV. READY
400 402	400 402	110V SUPPLY

CABLE NO:-4 (5mt)

CABLE 0.5Sqmm. 2 CORE SHIELDED CABLE
RCB TO THERMOCOUPLE

RCB	TERMO COUPLE	
422(CABLE NO:-11) 423(CABLE NO:-2)	422 (CABLE NO:-11) 423(CABLE NO:-2)	THERMO COUPLE

A

CABLE NO:-5 (5mt)

CABLE 0.5Sqmm. 2 CORE SHIELDED CABLE
RCB TO SLIDE MECH

RCB	SLIDE MECH.	
02 400(00)	A02 A400(00)	SLIDE MECH.

A

CABLE NO:-6 (5mt)

RCB TO TEMPRATURE SENSORE

RCB	TEMP. SENSORE	
03 400(CABLE NO:-10)	A03 A400(CABLE NO:-10)	TEMP SEN. SOL

A

CABLE NO:-7 (5mt)

RCB TO AIR PRESURE SW.

RCB	APS	
402 421	A402 (402) A421 (421)	APS

NOTE:- CHANGE IN WIRE NO.ARE SPECIFIED IN TO (---) OF PREVIOUS ONE DUE TO NOTE AVAILABILITY OF WIRES WITH FERULE NOS. AS INDICATED IN DRG.

NOTE:-
(1) CONNECT RC N/W ACROSS EACH CONTACTORS, RELAYS

☒ R.C.B TERMINAL
☐ P.S. TERMINAL

JOB NO :- H0465 & 466 BHARAT FORGE

THIS DRAWING CONTAINS PROPRIETARY AND CONFIDENTIAL INFORMATION BELONGING TO INDUCTOTHERM CORP. THIS DRAWING MAY NOT BE REPRODUCED OR COPIED IN WHOLE OR IN PART NOR CAN THE INFORMATION CONTAINED BE USED FOR ANY PURPOSE WITHOUT THE EXPRESS WRITTEN PERMISSION OF INDUCTOTHERM CORP. THIS DRAWING IS THE PROPERTY OF INDUCTOTHERM CORP. AND MUST BE RETURNED UPON REQUEST.

THIS DRAWING IS LOANED BY INDUCTOTHERM CORP. TO THE CUSTOMER OR USER AS A GENERAL DESCRIPTION OF THE EQUIPMENT AND IS TO BE USED FOR THE PROPER INSTALLATION AND OPERATION OF THIS EQUIPMENT. THIS DRAWING MAY NOT BE COPIED IN WHOLE OR IN PART NOR CAN IT BE USED FOR THE MANUFACTURE OF ANY EQUIPMENT WITHOUT THE EXPRESS WRITTEN PERMISSION OF INDUCTOTHERM CORP.

CODE	BRIEF RECORD	ZONE	DATE	DRN	CHD
A	REVISED AS PER SERVICE FEEDBACK BY PRATIK		10.9.04	AKB	ABG

REVISION DETAILS

HEATING
INDUCTOTHERM (INDIA) LTD.

TITLE
CIRCUIT ELECTRICAL POWER-CONTROL RCB 25kW 30kHz SP12

DRN. BY	ASHOK	17.07.04	DRG. NO.	REV.
CHD. BY		17.07.04	IDH 8159/4	A
APPD. BY		17.07.04		
SCALE ---			USED ON/DRG.NO.	
			SHEET NO.	

HE-3137