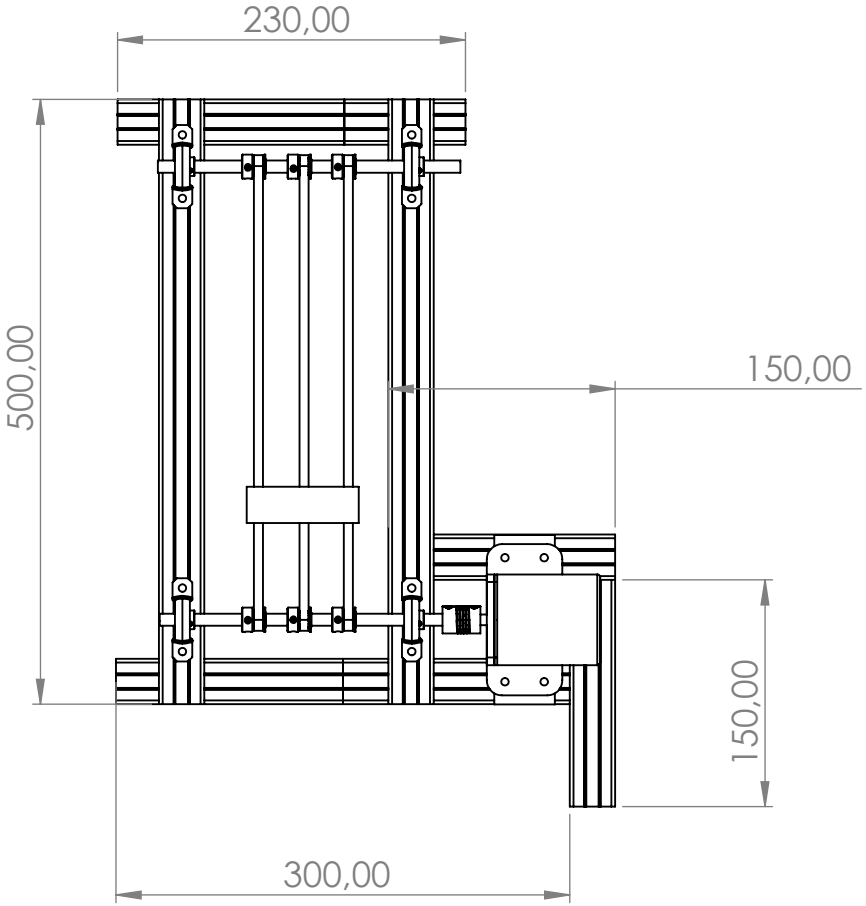

TOP VIEW

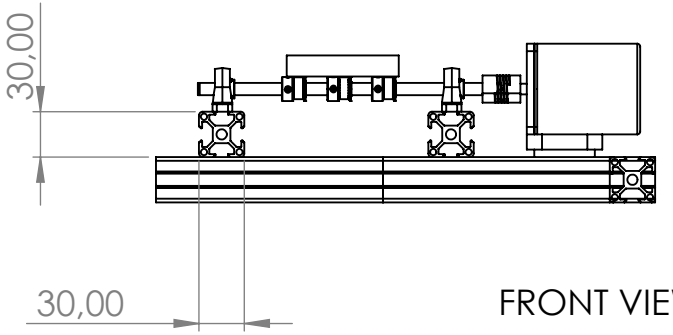

FRONT VIEW

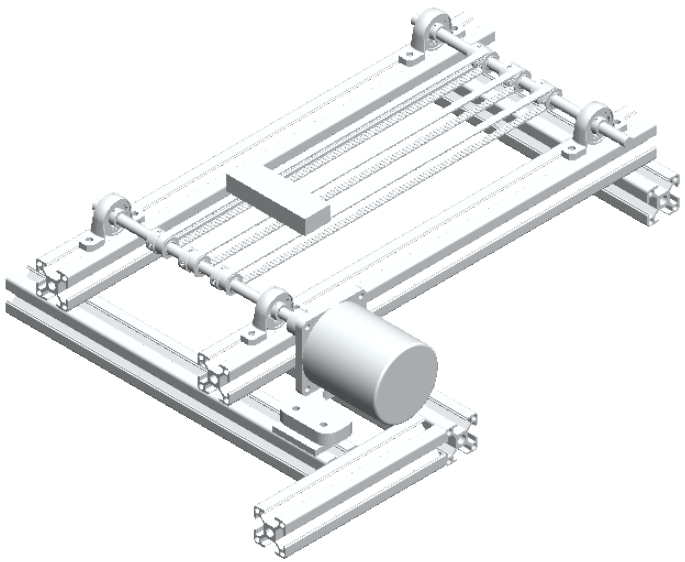

ISOMETRIC VIEW

S.N	Aluminum Profile (30X30) Length	Quantity
1	500	2Nos.
2	300	1No.
3	230	1No.
4	150	2Nos.

All Dimensions are in mm

BIBEK GUPTA		
UNIVERSIDAD DE OVIEDO		
21.06.2024	Aluminium Profile Base	A4
GEWICHT:	SCALE :1:1	BLATT 1 VON 1