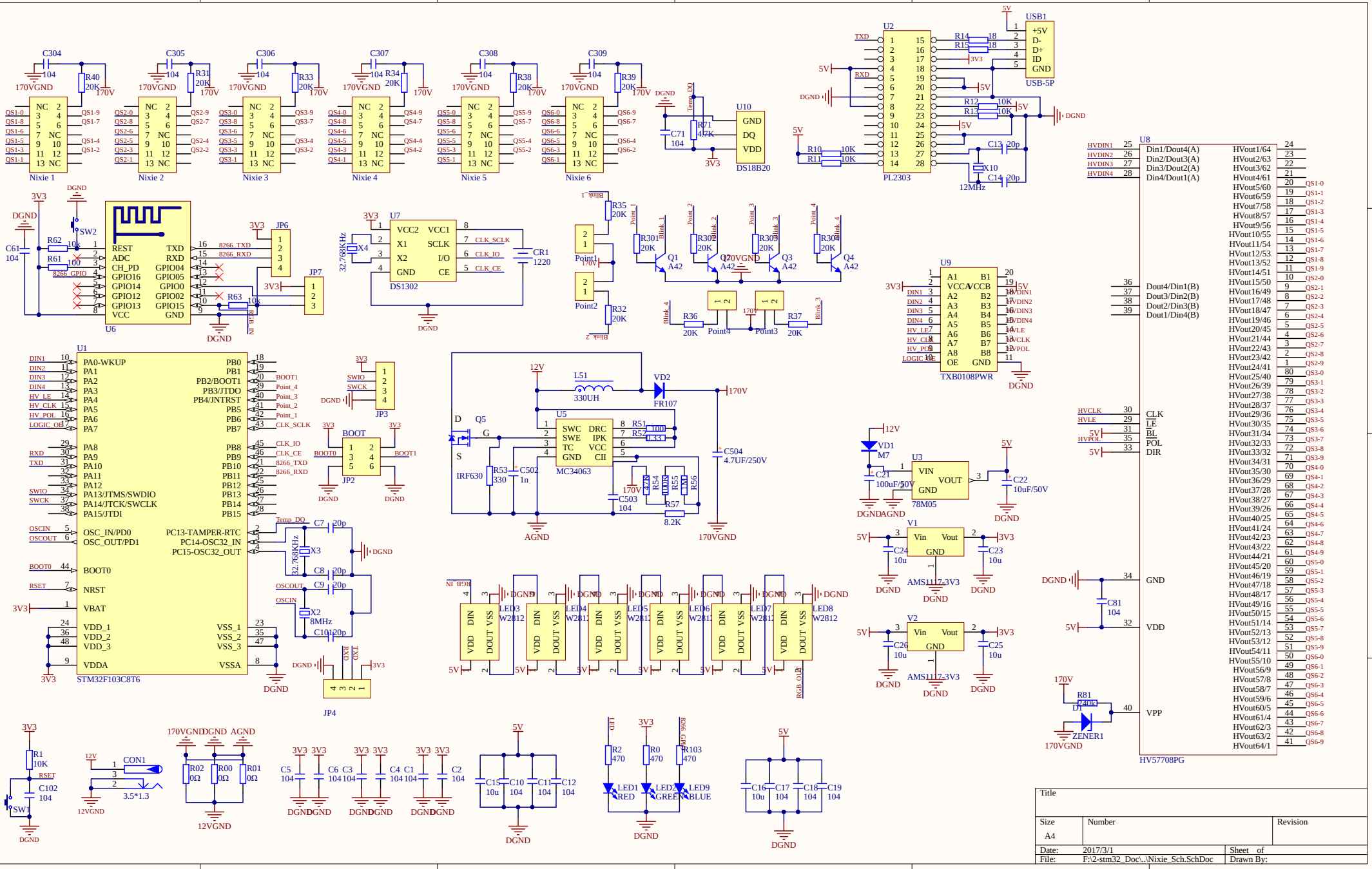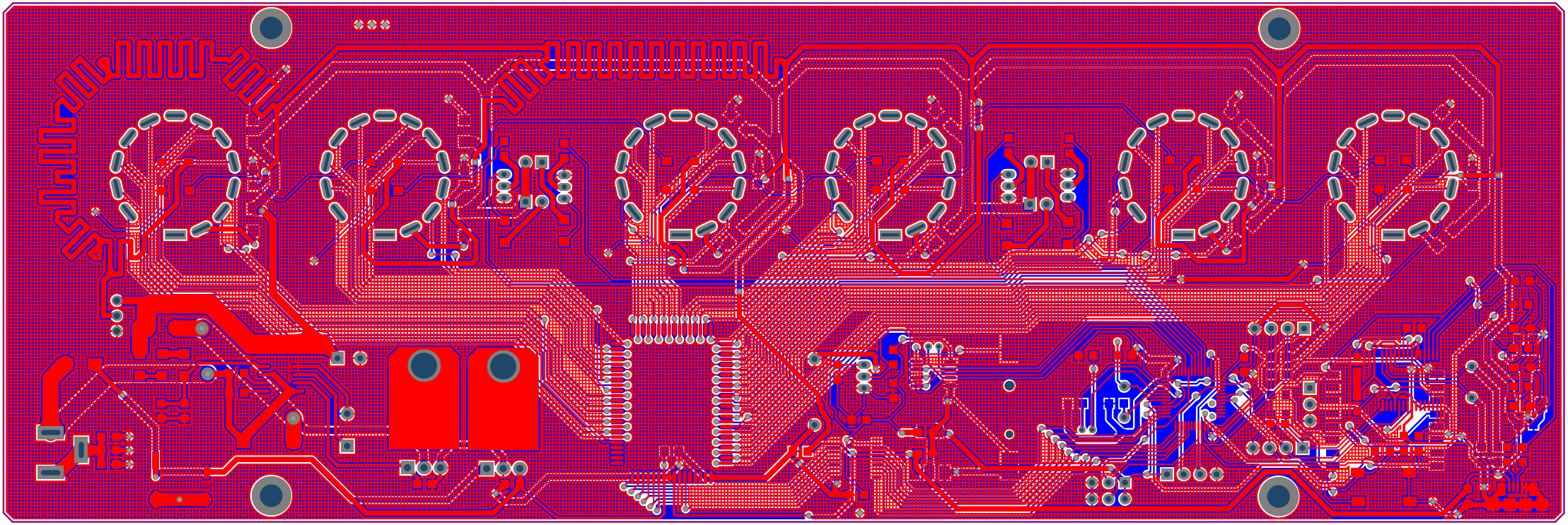
Nixie 1
Nixie 2
Nixie 3
Nixie 4
Nixie 5
Nixie 6
U1
STM32F103C8T6
U2
PL2303
USB1
USB-5P
U6
U7
DS1302
U8
HV57708PG
U9
TXB0108PWR
U10
DS18B20
U5
MC34063
Q5
IRF630
L51
330UH
VD2
FR107
170V
170VGND
12V
AGND
DGND
3V3
5V
12VGND
CON1
3.5*1.3
SW1
SW2
JP2
JP3
JP4
JP6
JP7
X4
32.768KHz
X2
8MHz
X3
32.768KHz
X10
12MHz
CR1
1220
VD1
M7
78M05
AMS1117-3V3
ZENER1
D1
R81
240K
LED1
RED
LED2
GREEN
LED9
BLUE
LED3
W2812
LED4
W2812
LED5
W2812
LED6
W2812
LED7
W2812
LED8
W2812
Q1
A42
Q2
A42
Q3
A42
Q4
A42
Point1
Point2
Point3
Point4
Title
Size
A4
Number
Revision
Date: 2017/3/1
Sheet of
File: F:\2-stm32_Doc\..\Nixie_Sch.SchDoc
Drawn By: