Name: _____

EM waves 2 H

Date:

Time:

Total marks available: 43

Total marks achieved: _____

Questions

Q1.

X-rays and radio waves are part of the electromagnetic spectrum and have different uses.

These radiations are produced in different ways.

X-rays are emitted when electrons within an atom go through energy changes.

Radiowaves are produced by electrons in circuits.

Compare X-rays with radio waves.

Your answer should refer to

- the uses of both types of radiation
- the different ways that electrons are involved in producing X-rays and radio waves. **(6)**

.....

.....

.....

.....

.....

.....

.....

.....

.....

.....

.....

.....

(Total for question = 6 marks)

Q2.

A student investigates how light is reflected from a plane mirror.

Figure 4 shows part of the student's investigation.

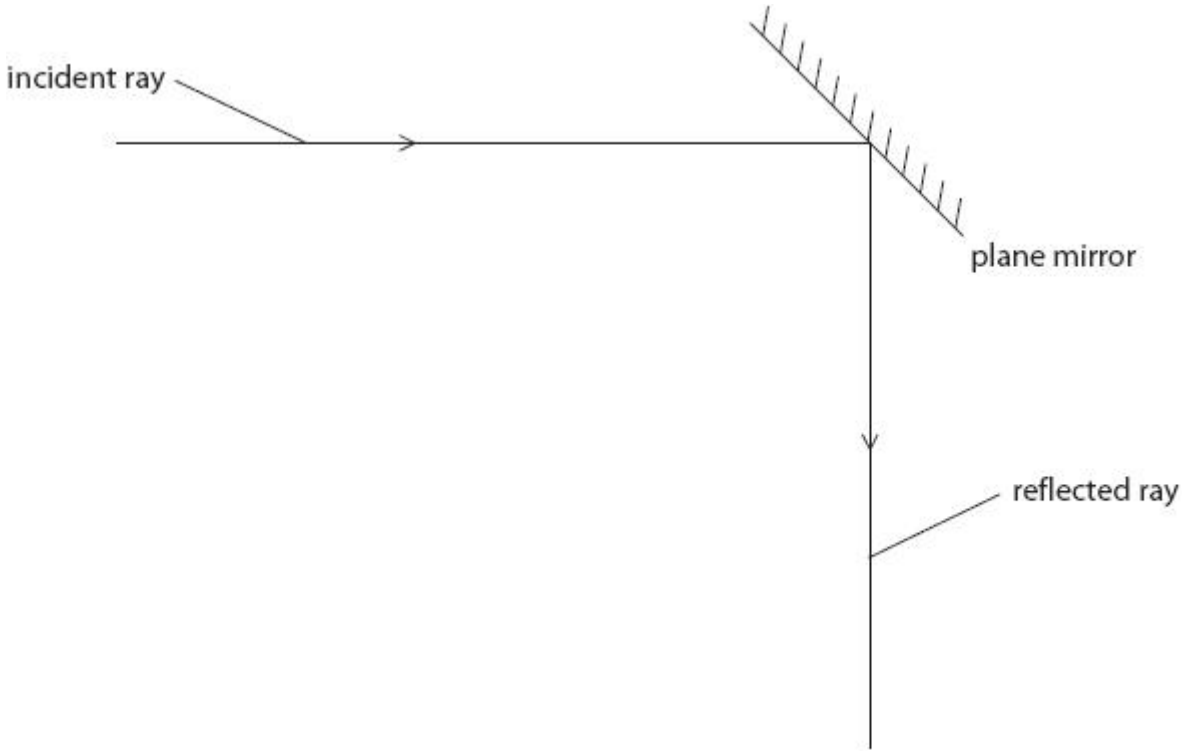

Figure 4

(i) Complete the diagram to show

- the normal
- the angle of incidence (*i*) and the angle of reflection (*r*).

(2)

(ii) Figure 5 shows a ray of light travelling through a 45°-glass prism.

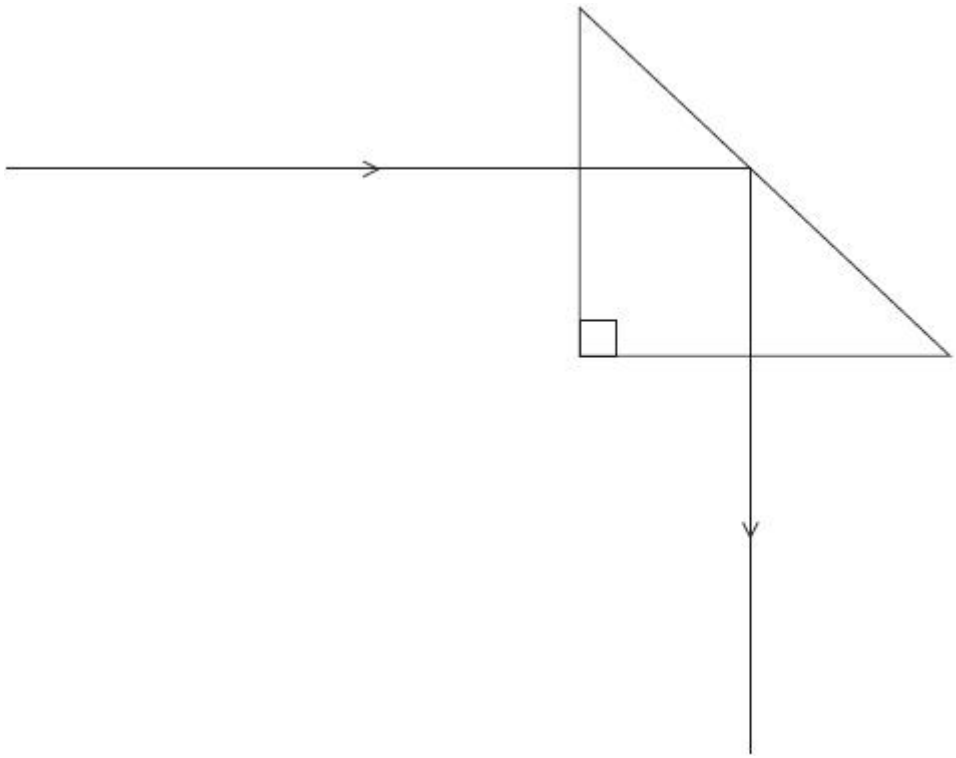

Figure 5

State what can be deduced from this diagram about the value of the critical angle for glass.

(1)

.....

.....

(iii) Give a reason why high quality optical instruments use prisms instead of mirrors to reflect light.

(2)

.....

.....

.....

.....

(Total for question = 5 marks)

Q3.

(a) The diagram shows a ray of light incident on a boundary between air and glass.

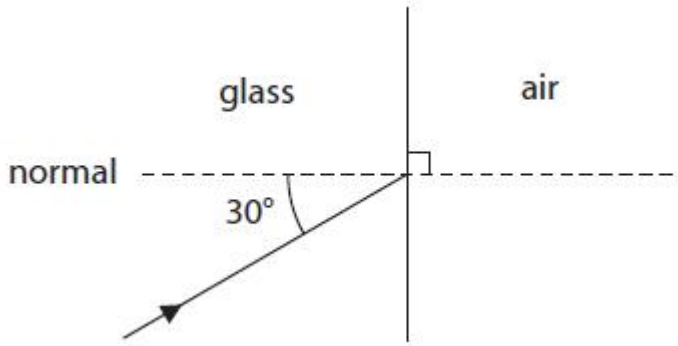

The critical angle for glass in air is 42°.
Which of these diagrams shows the ray of light after it meets the boundary between glass and air?
Put a cross (☒) in the box next to your answer.

(1)

☒ **A**

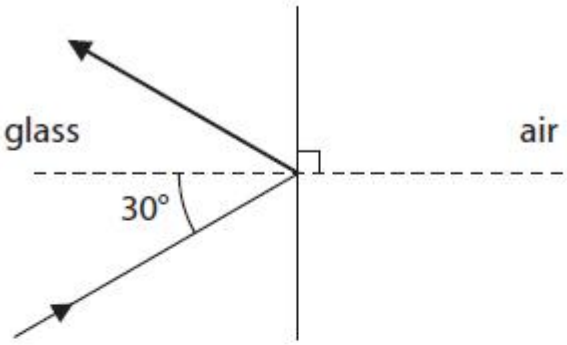

☒ **B**

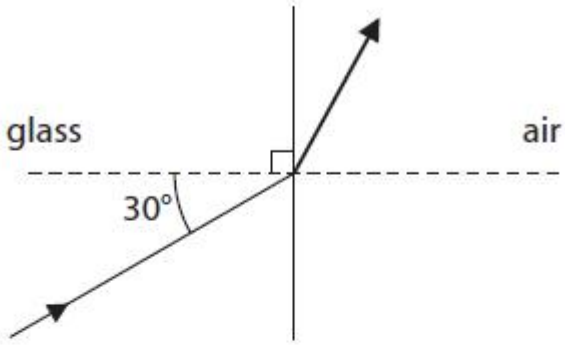

☒ **C**

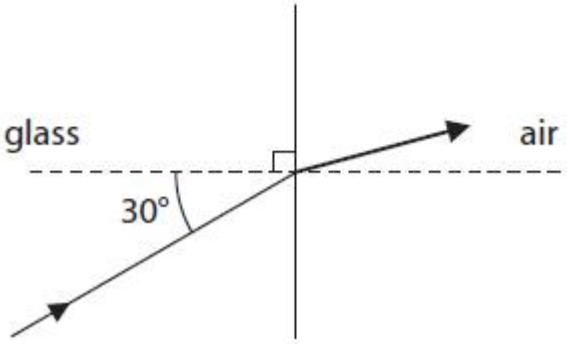

☒ **D**

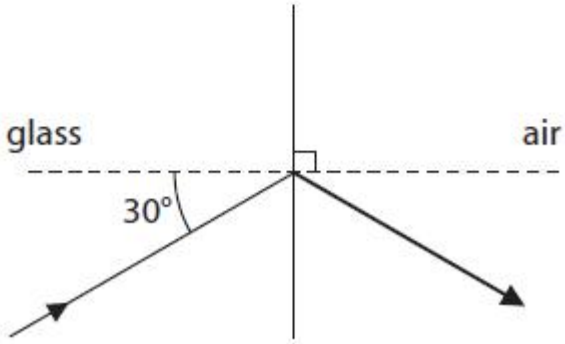

(b) The diagram shows how an endoscope is used to see inside a person's stomach.
Light is shone into the optical fibres in the endoscope at A and it comes out at B.

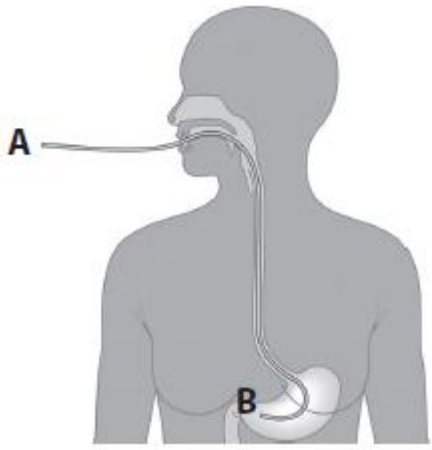

(i) The cross-sectional area of an optical fibre is 6.3×10^{-6} m^2.
The intensity of the light entering the optical fibre is 3.2×10^{7} W/m^2.
Calculate the power of the light entering the optical fibre.

(3)

power = ... W

(ii) Explain why the power of the light at B is the same as the power of the light at A.

(2)

.....

.....

.....

.....

(c) The optical fibre cable in an endoscope has a refractive index of 1.70.

The critical angle for a material can be calculated using the equation

$$\sin c = 1/n$$

where c is the critical angle
and n is the refractive index
The graph shows the relationship between an angle and the sine of the angle.

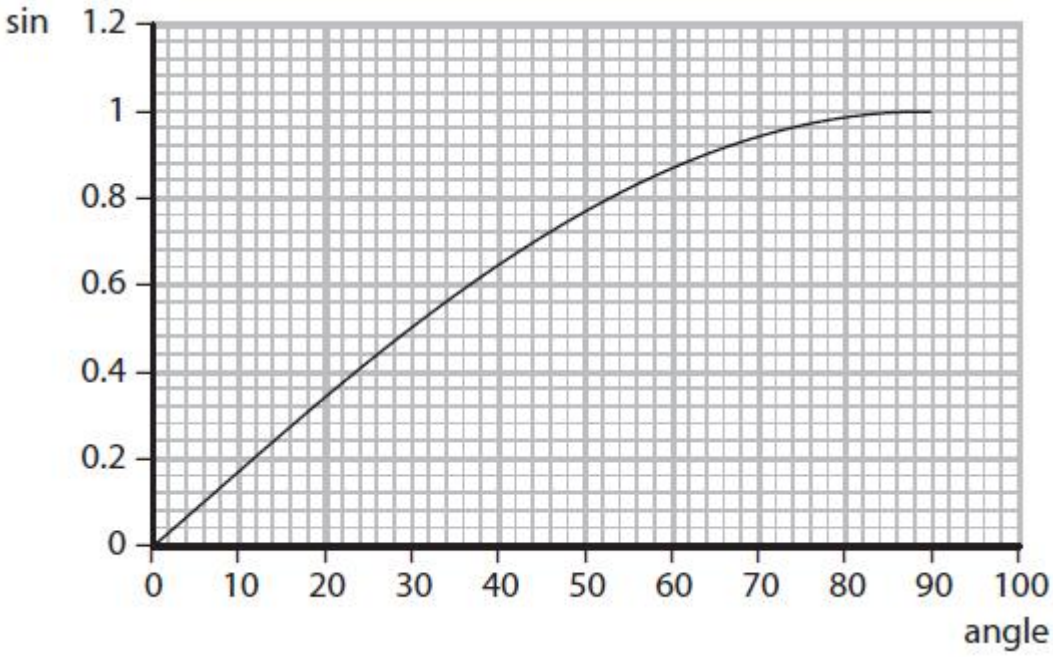

Use the equation and the graph to calculate the critical angle for the optical fibre.

(2)

critical angle = ... °

(Total for Question = 8 marks)

Q4.

Figure 3 shows an image taken at night using a camera that is sensitive to infrared radiation.

Figure 3

Radiation with shorter wavelengths shows as brighter areas in this image.

Explain why the people can be seen against the background in this image.

(2)

.....

.....

.....

.....

(Total for question = 2 marks)

Q5.

A student looks through a blue filter at a green leaf on a white background.

Describe the colours that the student sees.

(2)

.....

.....

.....

.....

(Total for question = 2 marks)

Q6.

Light is one example of an electromagnetic wave.

Light can transfer energy from a lamp to the leaf of a plant, causing chemical reactions in the leaf.

Describe examples of **two** other electromagnetic waves transferring energy.

(4)

1 .....

.....

.....

.....

2 .....

.....

.....

.....

(Total for question = 4 marks)

Q7.

* Sulfates and black soot are particles formed by industrial processes.

Some of these particles are found in the atmosphere over the Arctic Ocean.

The sulfates stay in the atmosphere and reflect (scatter) sunlight.

The black soot falls onto the Arctic ice.

Discuss how a reduction in these industrial processes is likely to affect the temperature of the atmosphere.

(6)

.....

.....

.....

.....

.....

.....

.....

.....

.....

.....

.....

.....

(Total for question = 6 marks)

Q8.

Ultraviolet waves cover a range of frequencies.

Scientists divide this range into three types, UVA, UVB and UVC.

The table in Figure 14 shows the frequency range for each type.

type	frequency range in Hz
UVA	7.5×10^{14} to 9.4×10^{14}
UVB	9.4×10^{14} to 10×10^{14}
UVC	10×10^{14} to 30×10^{14}

Figure 14

Figure 15 is a diagram about the effect that the Earth's atmosphere has on three types of ultraviolet radiation.

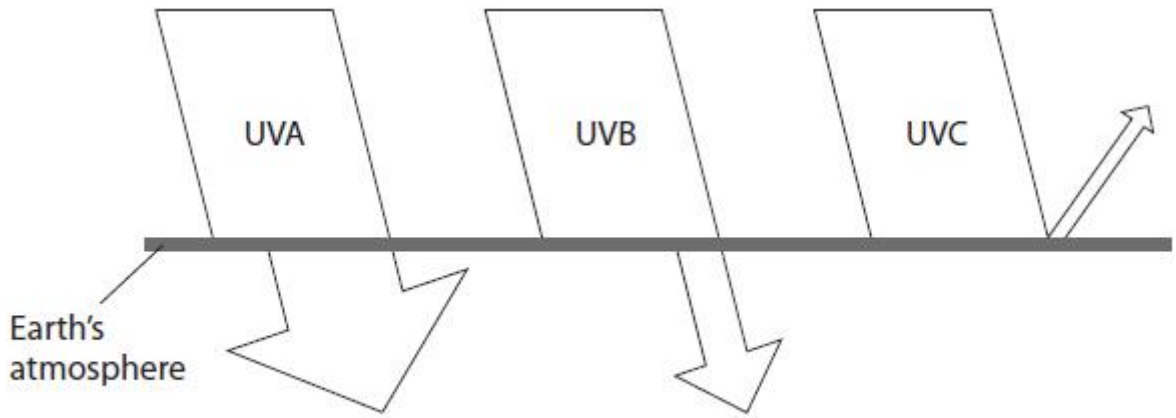

Figure 15

Describe how the effects change with **wavelength**, using information from Figure 14 and Figure 15.

The width of the arrows drawn indicates the amount of radiation that is involved.

Calculations are **not** required.

(4)

.....

.....

.....

.....

.....

.....

.....

.....

(Total for question = 4 marks)

Q9.

Describe how the power of a lens is related to its focal length and the shape of the lens.

(2)

.....

.....

.....

.....

.....

(Total for question = 2 marks)

Q10.

When light travels from air into glass, it is refracted.

To investigate this, a student has a rectangular glass block and a ray box.

The ray box produces a ray of light.

Describe how the student should use the glass block and ray box to produce a refracted ray and mark its position.

You may draw a diagram to help your answer.

(4)

.....

.....

.....

.....

.....

.....

.....

.....

.....

.....

(Total for question = 4 marks)