Questions

Q1.

* Explain, with the aid of a circuit diagram, the method a student could use to investigate how the resistance of a single lamp changes with the potential difference across the lamp.

(6)

.....

.....

.....

.....

.....

.....

.....

.....

.....

.....

.....

.....

.....

(Total for question = 6 marks)

Q2.

A student investigates resistors connected in parallel using a number of resistors.
Each resistor has the same resistance.

Figure 19 shows a circuit diagram with one resistor, R.

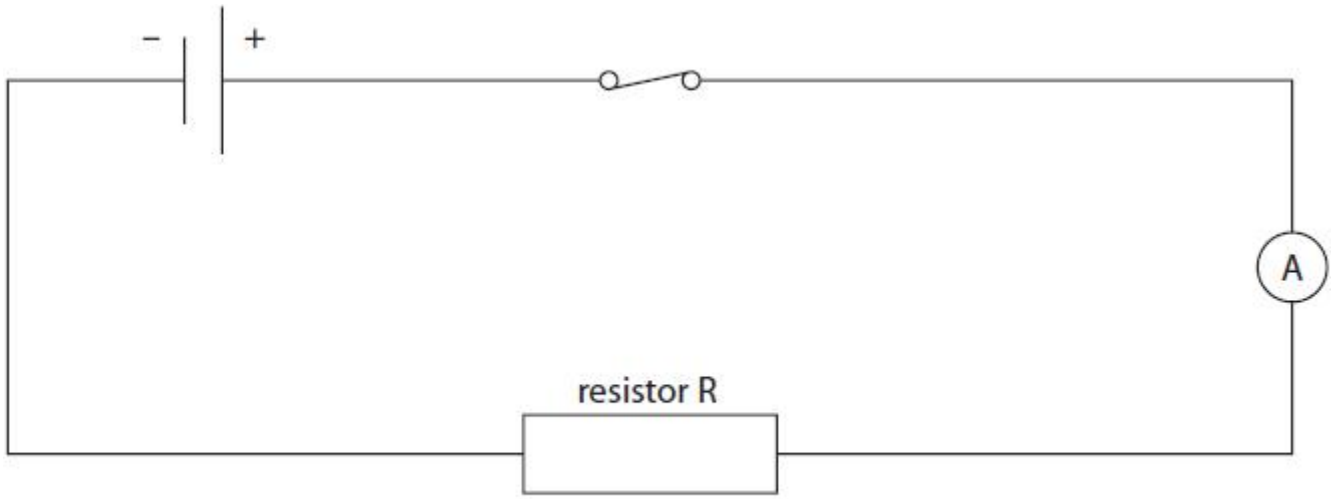

Figure 19

(i) Add to Figure 19:

- a voltmeter to find the potential difference across resistor R
- another resistor in parallel with resistor R. **(2)**

(ii) State the measurements that the student must take to find the overall resistance of the resistors in parallel.

(2)

.....

.....

.....

.....

(iii) The student investigates how the overall resistance of the circuit changes when additional resistors are added
Tin parallel to R.

Each resistor has the same resistance.
Figure 20 shows the results of the student's investigation.

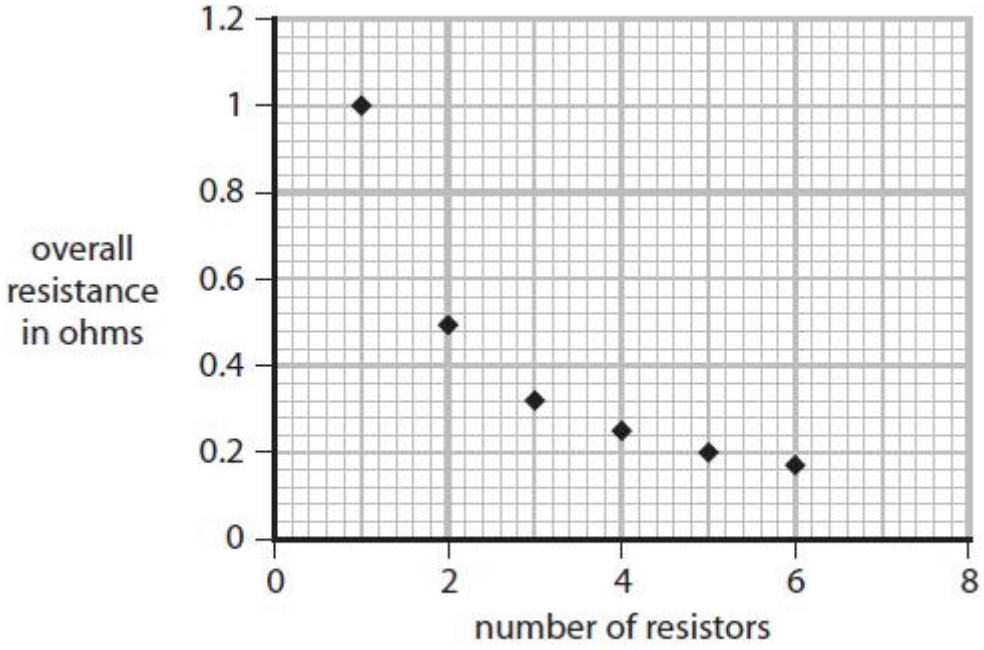

Figure 20

State the resistance of a single resistor.

(1)

resistance = ... Ω

(iv) Comment on the relationship between the overall resistance of the circuit and the number of resistors in parallel.

Use information from Figure 20 to support your answer.

(3)

.....

.....

.....

.....

.....

.....

.....

.....

.....

(Total for question = 8 marks)

Q3.

Answer the question with a cross in the box you think is correct (☒). If you change your mind about an answer, put a line through the box (☒) and then mark your new answer with a cross (☒).

A plug connects a television to the mains supply.

(i) The plug contains a fuse that is connected to the

(1)

- ☐ **A** live pin
- ☐ **B** negative pin
- ☐ **C** neutral pin
- ☐ **D** positive pin

(ii) A 3 A fuse is used in the plug.

Explain what happens if a fault causes the current to rise to more than 3 A.

(2)

.....

.....

.....

.....

(iii) A fuse is a safety device.

State **one** other safety device that can be used in domestic electrical wiring.

(1)

.....

.....

(Total for question = 4 marks)

Q4.

Some students investigate resistors in parallel.

The students set up a circuit containing **four** identical resistors.

The circuit used is shown in Figure 5.

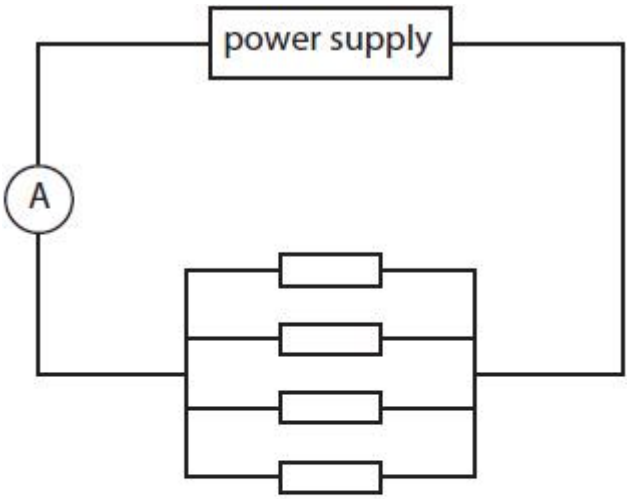

Figure 5

The students measure the current from the power supply and the voltage (p.d.) across the resistors.

(i) On Figure 5, draw a voltmeter connected to measure the voltage (p.d.) across the resistors.

(1)

The students remove one resistor and measure the current and voltage again with only 3 resistors in the circuit.

They repeat the measurements of current and voltage with only 2 resistors in the circuit and then with only 1 resistor in the circuit.

Figure 6 is a table of their results.

number of resistors	current in mA	voltage in V
4		6.00
3	27.3	6.00
2	18.2	6.00
1	9.1	6.00

Figure 6

(ii) Using data from the table in Figure 6, predict the current from the power supply when there are 4 resistors in the circuit.

(1)

current = ... mA

(iii) Using data from the table in Figure 6, calculate the resistance of **only 1** resistor.

(3)

resistance = ... Ω

(iv) Using data from the table in Figure 6, explain what happens to the **total resistance of the circuit** as the number of resistors in parallel decreases.

(3)

.....

.....

.....

.....

.....

.....

(Total for question = 8 marks)

Q5.

Figure 20 shows an electrical device connected to the wheels of an electric car.

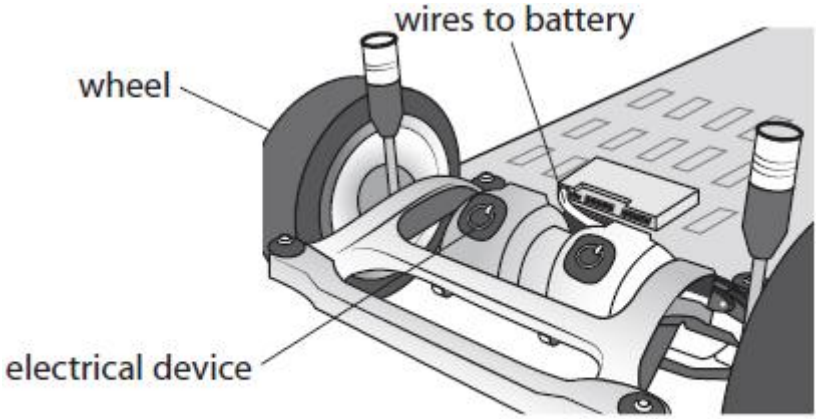

Figure 20

The battery can be recharged at a charging point.

The charging point provides an average current of 15.0 A to the battery, at a potential difference (voltage) of 400 V.

It is claimed that 126 MJ of energy can be transferred to the battery in less than 6 hours.

(i) Comment on this claim.

Use this equation to support your answer

$$t = \frac{E}{I \times V}$$

(3)

.....

.....

(ii) Calculate the total charge that moves into the battery while it is being recharged.

Use the equation

$$E = Q \times V$$

(2)

charge = ... C

(Total for question = 5 marks)

Q6.

The mains supply to the television is 230 V.

The current supplied to the television is 0.53 A.

Calculate the power input to the television.

Use the equation

$$P = I \times V$$

(2)

power = ... W

(Total for question = 2 marks)

Q7.

A circuit is then set up with two resistors as shown in Figure 21.

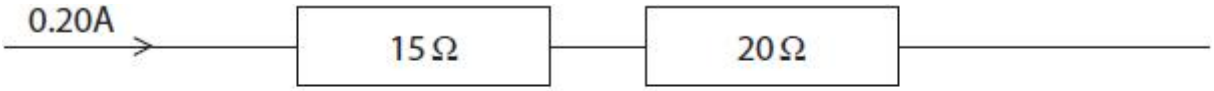

Figure 21

(i) Calculate the potential difference across the 15 Ω resistor.

(2)

potential difference = ... V

(ii) Calculate the total power dissipated when there is a current of 0.20 A in the two resistors.

Use the equation

$$P = I^2 \times R$$

(2)

power produced ..... W

(Total for question = 4 marks)

Q8.

An electric heater is connected to a 230 V supply.

The power supplied to the heater is 2.6 kW.

Calculate the current in the heater.

(3)

current = ... A

(Total for question = 3 marks)

Q9.

There is a current of 2.5 mA in a circuit.

Calculate the amount of charge that moves past a point in the circuit in 80 seconds.

State the unit of charge.

(3)

charge = ... unit .....

(Total for question = 3 marks)

Q10.

Answer the question with a cross in the box you think is correct ☒ . If you change your mind about an answer, put a line through the box ☒ and then mark your new answer with a cross ☒ .

A technician investigates different electrical devices that are used in a car.

The technician connects a device to the 12 V car battery.

The technician measures the current in the circuit and the potential difference (voltage) across the device.

Figure 17 shows the car battery and the device that is being tested.

Figure 17

The technician connects four devices to the car battery.

Each device is connected to its own switch and its own fuse.

Figure 18 shows how the four devices, fuses and switches are connected.

The current in each device is shown next to the device.

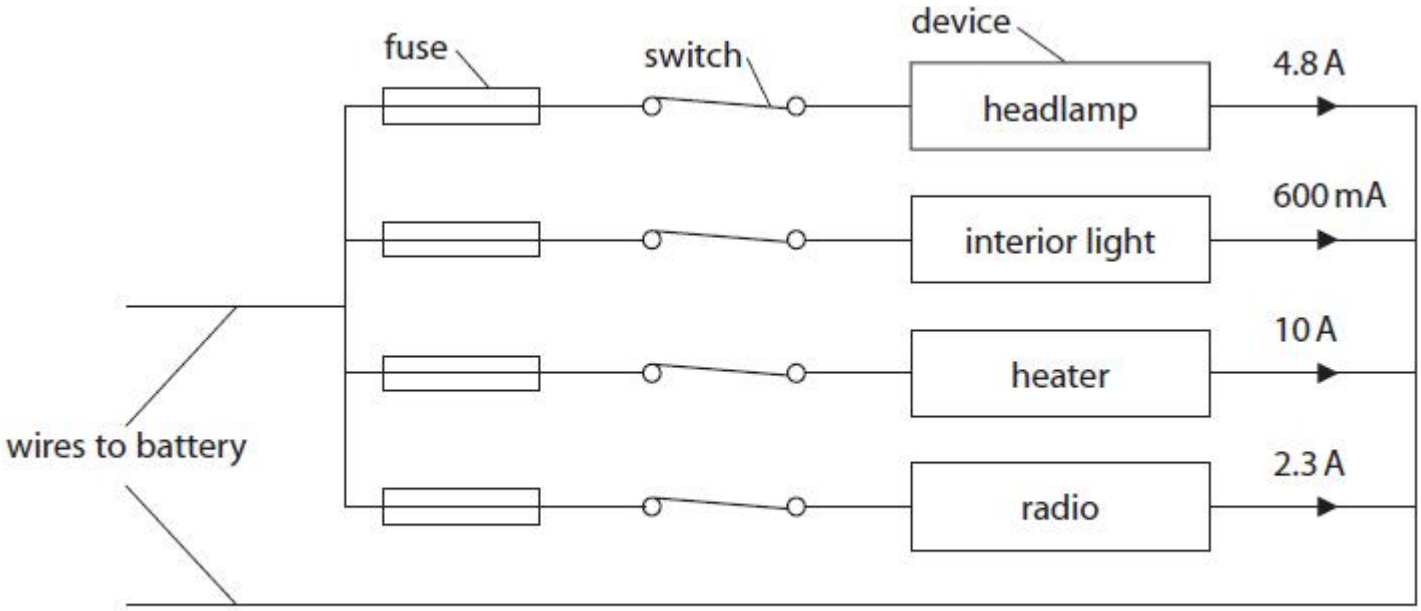

Figure 18

(i) Calculate the current in the wires to the battery when all the devices are switched on.

(1)

current = ... A

(ii) State how the overall resistance of the circuit changes when any one of the devices is switched off.

(1)

.....

.....

(iii) There is a current of 2.3 A in the radio when the radio is working correctly.

Which of these should the technician choose to protect the radio circuit?

(1)

- ☐ **A** 2 A fuse
- ☐ **B** 5 A fuse
- ☐ **C** 10 A fuse
- ☐ **D** 13 A fuse

(iv) Explain why the wires to the battery in a car are thicker than the wires that connect each device to its switch and its fuse.

(2)

.....

.....

.....

.....

(Total for question = 5 marks)

Mark Scheme

Q1.

Question Number	Answer	Mark
*	Answers will be credited according to candidate's deployment of knowledge and understanding of the material in relation to the qualities and skills outlined in the generic mark scheme. The indicative content below is not prescriptive and candidates are not required to include all the material which is indicated as relevant. Additional content included in the response must be scientific and relevant. AO1(6 marks) Circuit diagram including • power supply • ammeter • voltmeter • filament lamp • means of varying potential difference Description of method • measure current with ammeter • measure potential difference with voltmeter • vary the potential difference • calculate the resistance • repeat and compare	**(6)** AO 1 2

Level	Mark	Descriptor
	0	• No rewardable material.
Level 1	1-2	• An explanation that demonstrates elements of physics understanding, some of which is inaccurate. Understanding of scientific, enquiry, techniques and procedures lacks detail. (AO1) • Presents an explanation that is not logically ordered and with significant gaps. (AO1)
Level 2	3-4	• An explanation that demonstrates physics understanding, which is mostly relevant but may include some inaccuracies. Understanding of scientific ideas, enquiry, techniques and procedures is not fully detailed and/or developed. (AO1) • Presents an explanation of the procedure that has a structure, which is mostly clear, coherent and logical with minor steps missing. (AO1)
Level 3	5-6	• An explanation that demonstrates accurate and relevant physics understanding throughout. Understanding of the scientific ideas, enquiry, techniques and procedures is detailed and fully developed. (AO1) • Presents an explanation that has a well-developed structure, which is clear, coherent and logical. (AO1)

Q2.

Question number	Answer	Additional guidance	Mark
(i)	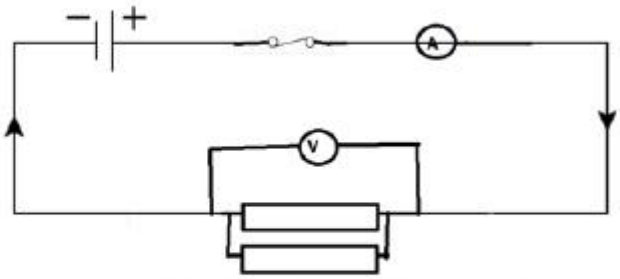 voltmeter in parallel across resistor (1) second resistor in parallel (1)		**(2)**

Question number	Answer	Additional guidance	Mark
(ii)	potential difference/ voltage (drop across resistors in parallel) (1) current (in the circuit)(1)	voltmeter reading ammeter reading	(2)

Question number	Answer	Additional guidance	Mark
(iii)	1 (Ω)	one (ohm)	(1)

Question number	Answer	Additional guidance	Mark
(iv)	Comments to include: the (overall) resistance decreases as the number of resistors (in parallel) increases (1) the relationship is non-linear (1) any two relevant values from the graph (1)	 decreases at a decreasing rate the relationship is inversely proportional scores first 2 marks	(3)

Q3.

Question Number	Answer	Additional guidance	Mark
(i)	**A** live pin **B** is incorrect because the mains plug has no negative pin **C** is incorrect because the neutral pin is at 0 V **D** is incorrect because the mains plug has no positive pin		(1) AO1.1

Question Number	Answer	Additional guidance	Mark
(ii)	An explanation linking the fuse melts (1) (so) stops / switches off current (1)	 allow fuse blows / breaks circuit is broken allow switches off {charge flow / circuit / TV / appliance / supply / electricity / voltage / power / energy}	(2) AO2.2

Question Number	Answer	Additional guidance	Mark
(iii)	**any one** from circuit breaker (1) earth (wire/pin) (1) surge protector (1) cable clamp (inside plug) (1) insulation / armouring (1) socket protector/cover (1)	 accept RCD / ELCB / RCCB / GFCI / MCB allow ground accept SPD accept rubber coating accept plug cover ignore switch / fuse / fuse box	**(1)** **AO1.1**

Q4.

	Answer	Additional guidance	Mark
(i)	voltmeter in parallel with resistors (1)	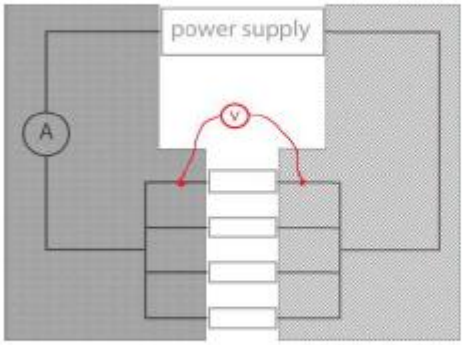 one voltmeter connection in each shaded region	**(1)** **A)1.2**

	Answer	Additional guidance	Mark
(ii)	36(.4) (mA) (1)	allow 36 to 37 inclusive may be seen in table in Figure 6	**(1)** **AO3.2**

	Answer	Additional guidance	Mark
(iii)	substitution into $V = IR$ (1) 6(.00) = 9.1 (× 10^{-3}) × R	allow substitution and rearrangement in either order accept 18.2/2 or 27.3/3 or (36 to 37)/4 in place of 9.1 allow substitution of correct values into a visible, incorrectly rearranged algebraic equation for this mark only	(3) AO2.1
	rearrangement (1) (R =) $\frac{6(.00)}{9.1 (\times 10^{-3})}$ evaluation (1) 660 (Ω)	(R =) $\frac{V}{I}$ allow values that round to 660 e.g. 659.3 award full marks for the correct answer without working. value rounding to 660 to any other power of 10 scores 2 marks	

	Answer	Additional guidance	Mark
(iv)	an explanation linking: (total) resistance increases (1) (because) current decreases (1) (and) voltage stays the same (1)	 fewer paths for the current resistance calculations supporting increasing resistance	(3) AO3.2

Q5.

Question number	Answer	Additional guidance	Mark
(i)	**either** calculation of time: substitution (1) (t =) $\frac{126 (\times 10^6)}{15 \times 400 (\times 3600)}$ evaluation (1) (t=) 5.8(3) (h)	accept correct time conversion e.g. 5h 50 min 350 min 21 000 s award 2 marks for correct answer without working. award 1 mark for answer of either 2.1 or 5.8(3) to any other power of ten	**(3)** **AO3**
	conclusion (1) claim is justified as the time is less (than 6 hours)	allow relevant comment based on incorrectly calculated time (independent mark)	

	or calculation of energy: substitution (1) $6\ (\times 3600) = \frac{E}{15 \times 400}$ rearrangement and evaluation (1) E = 130 MJ conclusion (1) claim is justified as energy (in 6 hours) is more than (126 MJ) required.	 accept 129.6 MJ accept 129 600 000 J allow relevant comment based on incorrectly calculated energy (independent mark)	

Question number	Answer	Additional guidance	Mark
(ii)	substitution (1) $126 (\times 10^6) = Q \times 400$ re-arrangement and evaluation (1) (Q =) 315 000 (coulombs)	alternative method re-arrangement (1) $(Q =) \frac{E}{V}$ **or** $(Q =) \frac{126 (\times 10^6)}{400}$ (substitution and) evaluation (1) (Q =) 315 000 (coulombs) accept answers rounding to 320 000 (coulombs) allow one mark for answers rounding to 3.2 to any other power of ten award two marks for correct answer without working.	**(2)** **AO2**

Q6.

Question Number	Answer	Additional guidance	Mark
	substitution (1) (P=) 0.53 x 230 evaluation (1) 120 (W)	accept values that round down to 120 to 2s.f. e.g.121.9 or 122 award full marks for the correct answer without working	**(2)** **AO2.1**

Q7.

Question number	Answer	Additional guidance	Mark
(i)	recall and substitution (1) V = 0.20 x 15 evaluation (1) 3 (V)	7(V) gains 1 mark (use of 15 + 20) award full marks for the correct answer without working	**(2)**

Question number	Answer	Additional guidance	Mark
(ii)	addition and substitution (1) (P=) 0.20^2 x 35 evaluation (1) 1.4 (W)	award full marks for the correct answer without working	**(2)**

Q8.

Question number	Answer	Additional guidance	Mark
	substitution into P = V × I (1) 2600 = 230 × I rearrangement (1) I = P ÷ V evaluation (1) 11 (A)	Substitution and re-arrangement in either order I = 2600 ÷ 230 for 2 marks allow answers that round to 11 award full marks for correct answer without working allow I = 2.6 ÷ 230 for 1 mark allow 0.011 (A) for 2 marks max if no other marks scored, award 1 mark for 2.6 kW = 2600 W	(3)

Q9.

Question number	Answer	Additional guidance	Mark
	substitution into Q = I x t (1) (Q =) 2.5 (x 10^{-3}) x 80 evaluation (1) (Q =) 0.2 unit (1) coulombs OR C OR As	 allow 0.2 to any other power of ten for 1 mark award first two marks for correct answer without working independent mark allow c award 3 marks for 200 mC OR 200 mAs award 2 marks for 200 C OR 200 As	**(3)** **AO2**

Q10.

Question number	Answer	Additional guidance	Mark
(i)	17.7 (A)		**(1)** **AO1**

Question number	Answer	Additional guidance	Mark
(ii)	(The resistance) increases		**(1)** **AO1**

Question number	Answer	Additional guidance	Mark
(iii)	B 5 A fuse A is incorrect because it has a smaller value than the expected current C and D are incorrect because they have a much higher value than the expected current		**(1)** **AO1**

Question number	Answer	Additional guidance	Mark
(iv)	An explanation linking **two** of thick(er) wires have low(er) resistance (1) less thermal energy transferred (in the wires)(1) less potential difference / voltage (drop) across the wires (1)	allow reverse argument allow so wires do not get hot allow less voltage is lost more current can be carried	**(2)** **AO1**