Questions

Q1.

The data logger records observations using sensors instead of meters. The sensors are connected to a computer to collect and display the observations.

The data logger collects 555 pairs of data in 2 minutes.

The results are shown in Figure 20.

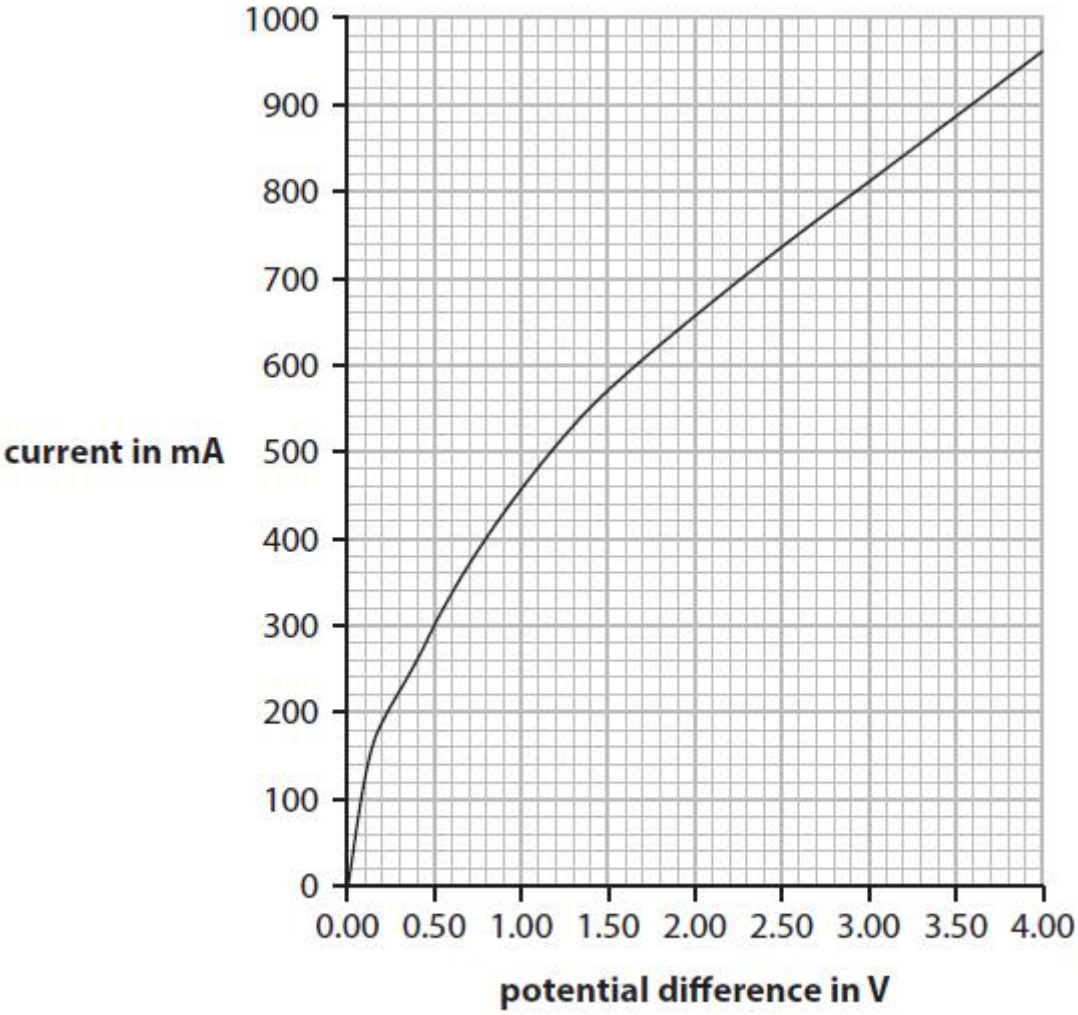

Figure 20

(i) Suggest **one** advantage of using a data logger instead of meters in this investigation.

(1)

.....

.....

(ii) Describe how current varies with potential difference in the graph in Figure 20.

(2)

.....

.....

.....

.....

(iii) Use data from the graph in Figure 20 to show how the resistance changes with potential difference for the filament lamp.

(2)

.....

.....

.....

.....

(Total for question = 5 marks)

Q2.

A student investigates how current varies with potential difference across a filament lamp.

The student uses a power supply, a variable resistor, the filament lamp and two meters.

Part of the circuit diagram is shown in Figure 19.

Complete the circuit diagram needed for this investigation.

(3)

Figure 19

(Total for question = 3 marks)

Q3.

A technician investigates different electrical devices that are used in a car.

The technician connects a device to the 12 V car battery.

The technician measures the current in the circuit and the potential difference (voltage) across the device.

Figure 17 shows the car battery and the device that is being tested.

Figure 17

(i) Draw on Figure 17 to show how the circuit should be completed so that the current in the circuit and voltage across the device can be measured.

(2)

(ii) The technician tests a headlamp.

The current in the headlamp is 4.8 A when connected to the 12 V battery.
Calculate the power supplied to the headlamp.

(2)

power = ... W

(iii) The technician tests an interior light.

The current in the interior light is 600 mA when connected to the 12 V battery.
Calculate the energy transferred to the interior light in 7 minutes.
Use an equation selected from the list of equations at the end of the paper.

(2)

energy transferred = ... J

(Total for question = 6 marks)

Q4.

(a) A technician investigates a light-dependent resistor (LDR) connected in series with a 120 Ω resistor and a voltage source.

The technician measures the voltage across the LDR and also the current in the LDR.

(i) Which **one** of these circuits should the technician use?
Put a cross (☒) in the box next to your answer.

(1)

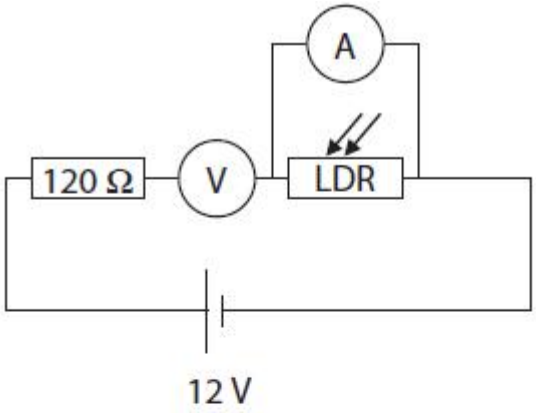

☐ **A**

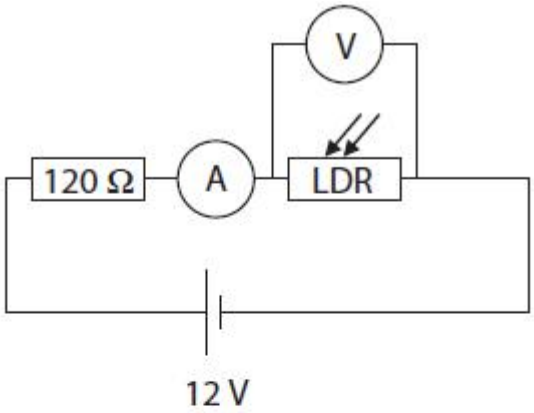

☐ **B**

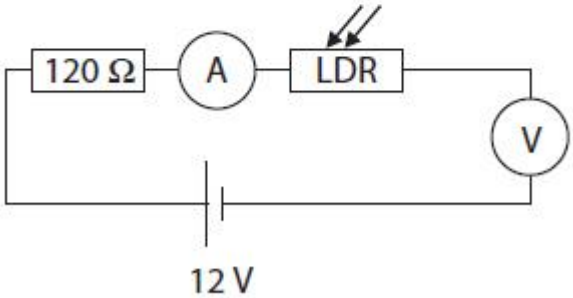

☐ **C**

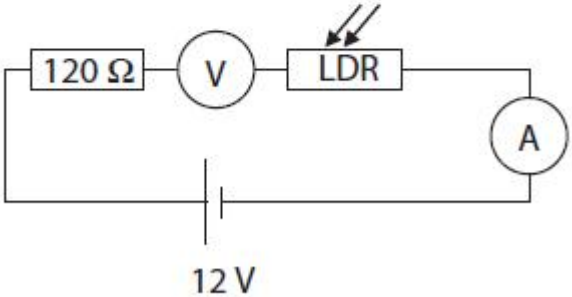

☐ **D**

(ii) When the LDR is in bright sunlight, its resistance is 185 Ω.
The voltage across the LDR is then 7.2V.
Show that the current in the LDR is about 0.039 A.

(2)

(iii) Complete the sentence by putting a cross (☒) in the box next to your answer.
The current in the 120 Ω resistor is

(1)

☐ **A** much more than the current in the LDR

☐ **B** much less than the current in the LDR

☐ **C** the same as the current in the LDR

☐ **D** the opposite of the current in the LDR

(iv) The technician repeats the readings with the LDR in different light conditions.
The table gives two of the readings.

light condition	current in LDR
bright sunlight	0.039 A
cloudy skies	0.028 A

Explain why the two current readings are different.

(2)

.....

.....

.....

.....

*(b) The photograph shows a temporary traffic sign.

The traffic sign uses many small lights all powered by a rechargeable battery.
These lights need to be very bright during the day so that they can be seen clearly.
They do not need to be as bright at night.

Explain how using a light-dependent resistor can make the energy stored in the battery last longer.

(6)

.....

.....

.....

.....

.....

.....

.....

.....

.....

.....

.....

.....

.....

.....

.....

.....

Q5.

Draw a circuit diagram you could use to investigate the relationship between potential difference, current and resistance for a filament lamp.

(3)

(Total for question = 3 marks)

Q6.

A battery sends a current through a metal wire.

(a) (i) Complete the sentence by putting a cross (■) in the box next to your answer.

Direct current is movement of charge

(1)

☐ **A** backwards and forwards

☐ **B** in many directions

☐ **C** in one direction

☐ **D** up and down

(ii) Complete the sentence by putting a cross (■) in the box next to your answer.

The particles that flow in the metal wire are

(1)

☐ **A** atoms

☐ **B** electrons

☐ **C** protons

☐ **D** neutrons

(b) The current in a wire is 3.7 A.

Calculate the charge that flows into the wire in 13 s.

(2)

.....

(c) Plastic is an insulator.

A student rubs a piece of plastic with a cloth.

This gives the plastic a negative charge.

(i) Explain how the plastic is charged by the rubbing.

(2)

.....

.....

.....

.....

(ii) The cloth is also charged when it rubs against the plastic.

Describe the charge on the cloth.

(2)

.....

.....

.....

.....

(Total for Question is 8 marks)

Q7.

A student investigates how the current in a lamp changes with the potential difference across the lamp.

The student uses the results to calculate the resistance of the lamp.

The results are shown in the table in Figure 5.

potential difference in V	current in A	resistance in Ω
1.0	0.09	11
2.0	0.14	14
3.0	0.18	17
4.0	0.22	18
5.0	0.26	
6.0	0.30	20

(i) One value of resistance is missing from the table in Figure 5.

Calculate the value of resistance that is missing from the table.

(3)

missing resistance = ... Ω

(ii) The student writes this conclusion:

'The resistance of the lamp is directly proportional to the potential difference.'

Comment on the student's conclusion.
Use information from Figure 5 in your answer.

(3)

.....

.....

.....

.....

.....

.....

(iii) The student used a power supply that had fixed output voltage settings.

Each of these outputs was a whole number of volts.
Describe how the student could add a component to the circuit that would provide a continuously variable voltage across the lamp.

(2)

.....

.....

.....

.....

(Total for question = 8 marks)

Q8.

Figure 3 shows some of the apparatus that students use to determine the resistance of a piece of iron wire.

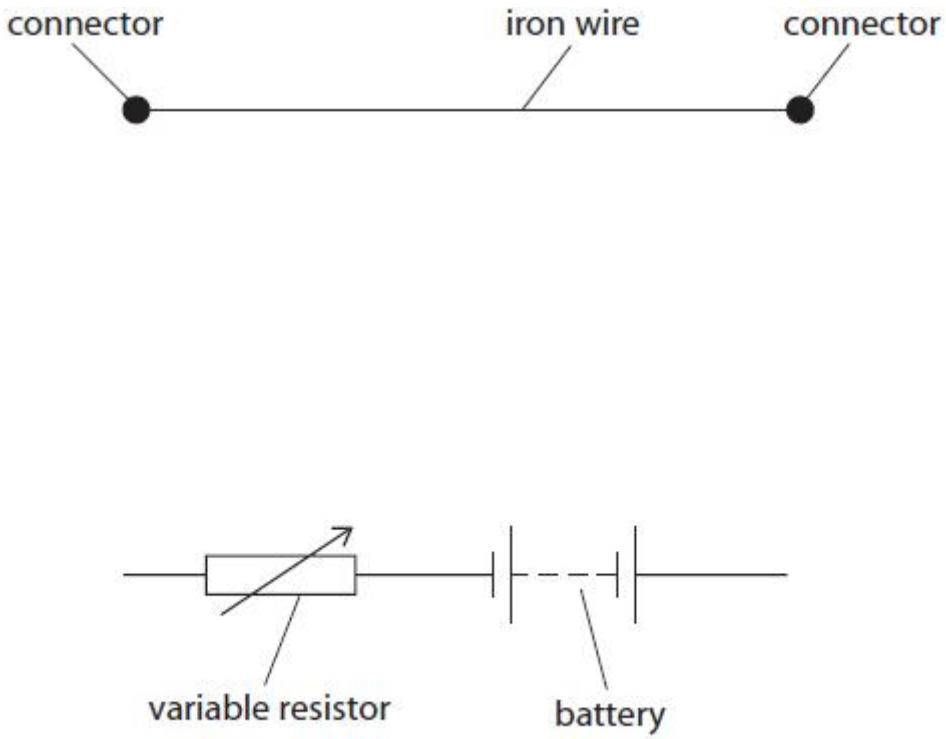

Figure 3

The potential difference (voltage) across another piece of wire is 1.56 V.

The current in the wire is 0.45 A.

Calculate the resistance of this piece of wire.

Use the equation

$$V = I \times R$$

(2)

resistance = ... Ω

(Total for question = 2 marks)

Q9.

Figure 3 shows a lamp connected to a d.c. power supply.

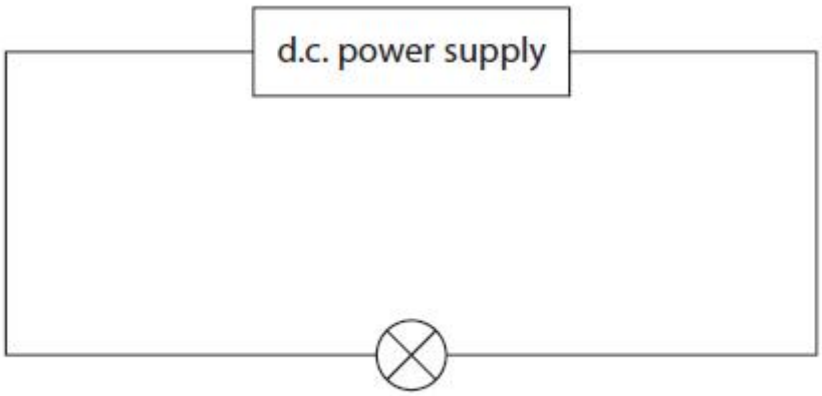

Figure 3

The power supply provides a potential difference (voltage) of 4.5 V.

The current in the lamp is 0.30 A.

(i) Calculate the resistance of the lamp.
Use the equation

$$R = \frac{V}{I}$$

(1)

resistance = ... Ω

(ii) Calculate the power supplied to the lamp.

(2)

power = ... W

(Total for question = 3 marks)

Q10.

Figure 19 shows two electrical devices for heating water.

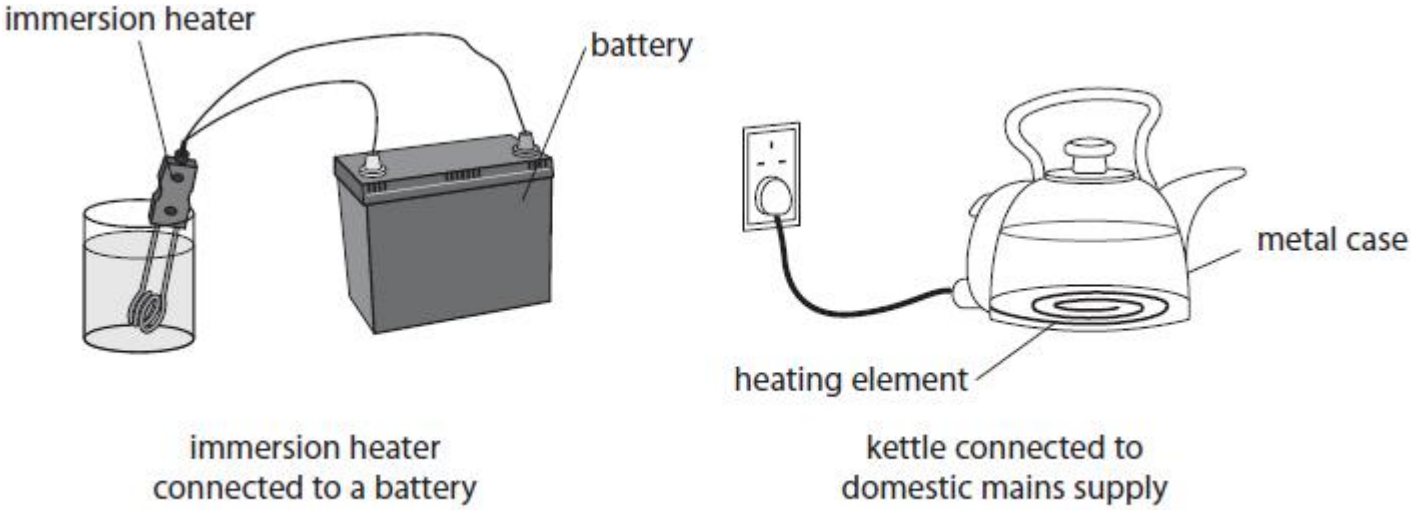

Figure 19

(i) The current in the element of the immersion heater is 14 A.

The power of the immersion heater is 130 W.
Calculate the resistance of the immersion heater.
Give your answer to two significant figures.

(3)

resistance of immersion heater = ... Ω

(ii) The current in the heating element of the kettle is 8.3 A.

State **two** differences between the movement of charge in the heating element of the kettle and the movement of charge in the immersion heater.

(2)

1 .....

.....

2 .....

.....

(Total for question = 5 marks)

Mark Scheme

Q1.

Question number	Answer	Additional guidance	Mark
i	any **one** suggestion from (collect data in a) **short time** (1) simultaneous measurement (of current and voltage) (1) gives an immediately **accessible graph** to analyse / think about (1) greater number of / more data pairs collected (1) **improves reliability** (1)	 allow saves time allow it is fast ignore 'accuracy' ignore 'precision'	**(1)** **AO2.2**

Question number	Answer	Additional guidance	Mark
ii	a description to include as potential difference increases current increases (1) non-linear (1)	 curve / changes gradient / changes steepness	**(2)** **AO3.2**

Question number	Answer	Additional guidance	Mark
iii	an explanation linking any attempt at calculating resistance using data from the graph **and** R=V/I (1) with a second pair of values used to give another value for **resistance showing that resistance increases as p.d. increases** (1)	alternative as potential difference increases resistance increases with shown by gradient of graph decreasing as p.d. increases	**(2)** **AO1.2**

Q2.

Question number	Answer	Additional guidance	Mark
	a complete circuit diagram with a correct symbol for a variable resistor added in series with a lamp (1) ammeter connected in series with a lamp (1) voltmeter added in parallel with a lamp (1)	allow inclusion of this lamp symbol in series with the power supply allow potential divider or potentiometer alternative allow ammeter and voltmeter symbols to be shown in square boxes example: 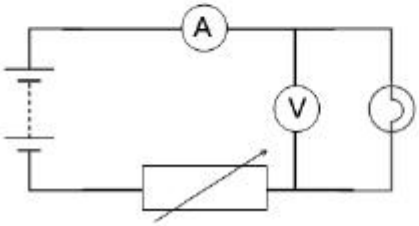	**(3)** **AO1.2**

Q3.

Question number	Answer	Additional guidance	Mark
(i)	voltmeter connected in parallel with device (1) ammeter connected in series with device (1)	voltmeter connected in parallel with battery may be in top or bottom of circuit and could be inside or outside the voltmeter connections	(2) AO1

Question number	Answer	Additional guidance	Mark
(ii)	recall and substitution (1) (power =) 12 x 4.8 evaluation (1) (power =) 58 (W)	voltmeter connected in parallel with battery allow values that round to 58 e.g. 57.6 award full marks for the correct answer without working	(2) AO2

Question number	Answer	Additional guidance	Mark
(iii)	substitution (1) (power =) 12 x 600(/1000) x 7 (x60) evaluation (1) (energy =) 3000 (J)	 allow values that round to 3000 e.g 3024 allow 1 mark for any other values of 3(.024) to any power of ten. if no other marks scored then award 1 mark for answers of 50,400 or 50.4 (substitution mark) award full marks for the correct answer without working.	(2) AO2

Q4.

Question Number	Answer	Acceptable answers	Mark
(a)(i)	**B**	.	**(1)**

Question Number	Answer	Acceptable answers	Mark
(a)(ii)	substitution V = 0.039 x 185 (1) evaluation 7.215 (which is about 7.2) (V) (1)	Substitution 7.2 = I x 185 (1) transposition I = 7.2 ÷ 185 (1)	**(2)**

Question Number	Answer	Acceptable answers	Mark
(a)(iii)	**C** (same as)		**(1)**

Question Number	Answer	Acceptable answers	Mark
(a)(iv)	An explanation to include The resistance (of the LDR) changes Greater resistance when in the dark	 LDR has less resistance in the light	**(2)**

Question Number		Indicative Content	Mark
QWC	***(b)**	An explanation linking some of the following. • less current is used at night-time • Resistance (of LDR or circuit) would increase with less ambient light • Higher resistance will allow less current (in the circuit) (ORA) • Less current in circuit means less energy from the battery • Less power required in the dark ORA for light conditions • Less current means less energy transferred (per second) • Total energy transferred is less during night time (than it would otherwise have been) due to the higher resistance of the LDR	**(6)**
Level	**0**	No rewardable content	
1	**1 - 2**	• A limited explanation linking the light level to EITHER resistance OR current. eg. It increases the resistance in the dark. • the answer communicates ideas using simple language and uses limited scientific terminology • spelling, punctuation and grammar are used with limited accuracy	
2	**3 - 4**	• A simple explanation linking the light level to TWO of resistance, current, energy. eg. At night-time its resistance would increase. This would reduce the current from the battery • the answer communicates ideas showing some evidence of clarity and organisation and uses scientific terminology appropriately • spelling, punctuation and grammar are used with some accuracy	
3	**5 - 6**	• A detailed explanation linking the light level to resistance AND current, AND energy. e.g. At night-time the resistance would be more. This would reduce the current and mean that the battery will not have to supply as much energy. • the answer communicates ideas clearly and coherently uses a range of scientific terminology accurately • spelling, punctuation and grammar are used with few errors	

Q5.

Question number	Answer	Mark
	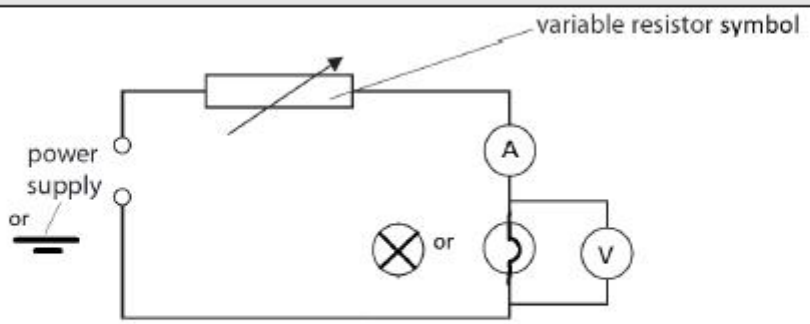 ammeter with correct symbol, in series with the lamp (1) voltmeter with correct symbol, in parallel with the lamp (1) valid method of changing the potential difference (1)	(3)

Q6.

	Answer	Acceptable answers	Mark
(a)(i)	C		**(1)**
(a)(ii)	B		**(1)**
(b)	substitution (1) 3.7 x 13 evaluation (1) 48 (C)	48.1 Correct answer with no calculation scores 2 marks	**(2)**
(c)(i)	Correct responses can be seen in (i) or (ii) An explanation linking • <u>electrons</u> (1)and <u>one</u> of • removed by friction (1) • (transferred) <u>to</u> plastic (1)	["positive electrons/ protons moving", seen anywhere in part (i) or (ii) loses this mark] ignore reference to charge before rubbing transferred from cloth	**(2)**
(c)(ii)	opposite to charge on plastic (1) <u>equal</u> to charge on the plastic (1)	charge on cloth is positive <u>same size</u> as charge on plastic electrons transferred from the cloth equal to electrons lost by cloth	**(2)**

Total question = 8 marks

Q7.

Question Number	Answer	Additional guidance	Mark
(i)	recall and substitution into V = IR (1) 5.0 = 0.26 × R rearrangement (1) (R=) $\frac{5.0}{0.26}$ evaluation (1) 19 (Ω)	accept substitution and rearrangement in either order (R=) $\frac{V}{I}$ $\frac{5.0}{0.26}$ scores 2 marks accept answers that round to 19 (Ω) (e.g. 19.23) accept answer written table if not written on answer line. award full marks for the correct answer without working	(3)

Question Number	Answer	Additional guidance	Mark
(ii)	a comment that includes the following points idea that resistance increases with potential difference (1) idea that doubling the potential difference does not result in doubling of resistance (1) **OR** V = constant x R is not supported by this data (1) correct processing of data from the table to support either of the above mark points (1)	idea that equal increments of potential difference do not cause equal increments of resistance reverse argument e.g. if student was correct then equal increments of p.d. would cause equal increment of resistance if student was correct then current would be constant ignore simple quoting of data for this mark	(3)

Question Number	Answer	Additional guidance	Mark
(iii)	A description that includes add a variable resistor (1) **with** in series (with the lamp / power supply) (1) **OR** add a potential divider (1) **with** in parallel with power supply (1)	marks may be obtained from a circuit diagram rheostat accept between / before / after for in series potentiometer across the power supply ignore replacing power supply / using fixed resistor(s) / LDR / thermistor in both cases, second mark conditional on first mark	**(2)**

Q8.

Question number	Answer	Additional guidance	Mark
	substitution (1) 1.56 = 0.45 x R rearrangment and evaluation (1) (R =) 3.5 (ohms)	alternative method rearrangement (1) (R =) $\frac{V}{I}$ **or** (R=) $\frac{1.56}{0.45}$ (substitution and) evaluation (1) (R =) 3.5 (ohms) allow values that round to 3.5 e.g. 3.46(666) 3.47 etc award full marks for the correct answer without working	**(2)** **AO2**

Q9.

Question number	Answer	Additional guidance	Mark
(i)	Substitution and evaluation (1) 15 (Ω)		**(1)** **AO2.1**

Question number	Answer	Additional guidance	Mark
(ii)	select / recall (1) (power =) V x I or (power =) I^2 x R or (power =) $\frac{V^2}{R}$ substitution and evaluation (1) (power =) 1.4 (W)	 (power =) 4.5 x 0.3 0.3^2 x 15 $\frac{4.5^2}{15}$ allow 1.3(5) (W) award full marks for the correct answer without working	**(2)** **AO2.1**

Q10.

Question Number	Answer	Additional guidance	Mark
(i)	recall and substitution into $P = I^2 \times R$ (1) $130 = 14^2 \times R$ rearrangement (1) $R = \frac{130}{14^2}$ evaluation to **2 sig fig** (1) (R =) = 0.66 (Ω)	substitution and rearrangement may be in either order alternative route: **V** (= $\frac{P}{I}$) = $\frac{130}{14}$ OR 9.3 V (1) R (= $\frac{V}{I}$) = $\frac{9.3}{14}$ (1) award full marks for the correct answer without working award 2 marks for 0.663.. or 0.67	**(3)**

Question Number	Answer	Additional guidance	Mark
(ii)		accept reverse arguments	(2)
	rate of flow of charge in the immersion heater is greater than in the kettle / heating element (1)	more charge per second in the immersion heater allow (in this context) faster (rate of) flow in immersion heater 14 coulombs per sec in immersion heater and 8.3 coulombs per sec in kettle / heating element	
	the direction of the flow of charge in the kettle / heating element keeps changing (whereas it remains in the same direction in the immersion heater) (1)	flows both ways in the kettle / heating element (one way in the heater) simply referring to alternating current and direct current is not enough	