Questions

Q1.

A student connects a resistor across the terminals of a 9 V battery.

There is a current of 6 mA in the resistor.

(i) Calculate the resistance of the resistor.

(2)

resistance = ... Ω

(ii) Describe how an additional component could be used to vary the current in the resistor.

(2)

.....

.....

.....

.....

(Total for question = 4 marks)

Q2.

A resistor is connected to a power supply.

The resistor becomes warm while there is a current in it.

Explain why the resistor becomes warm.

(2)

.....

.....

.....

.....

.....

(Total for question = 2 marks)

Q3.

* Figure 21 shows a device that a person can use to lift a large load with a smaller effort force.

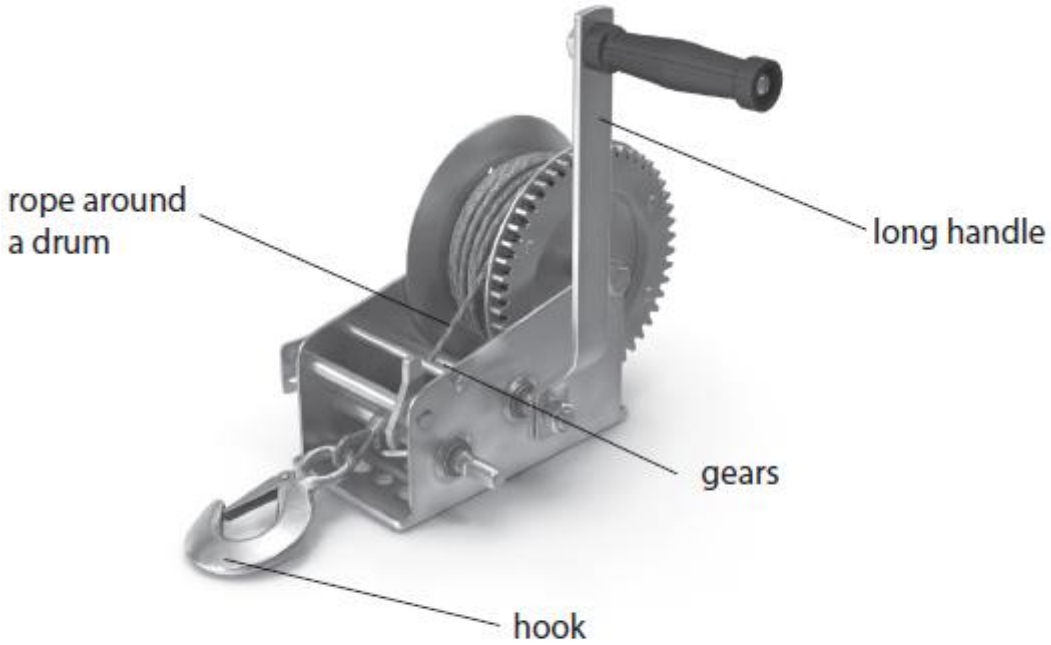

(Source: © Shutterstock-Pixelsquid/Shutterstock)

Figure 21

Figure 22 shows the important parts of the device. The curved arrows show the directions of rotation of the handle, the gears and the drum.

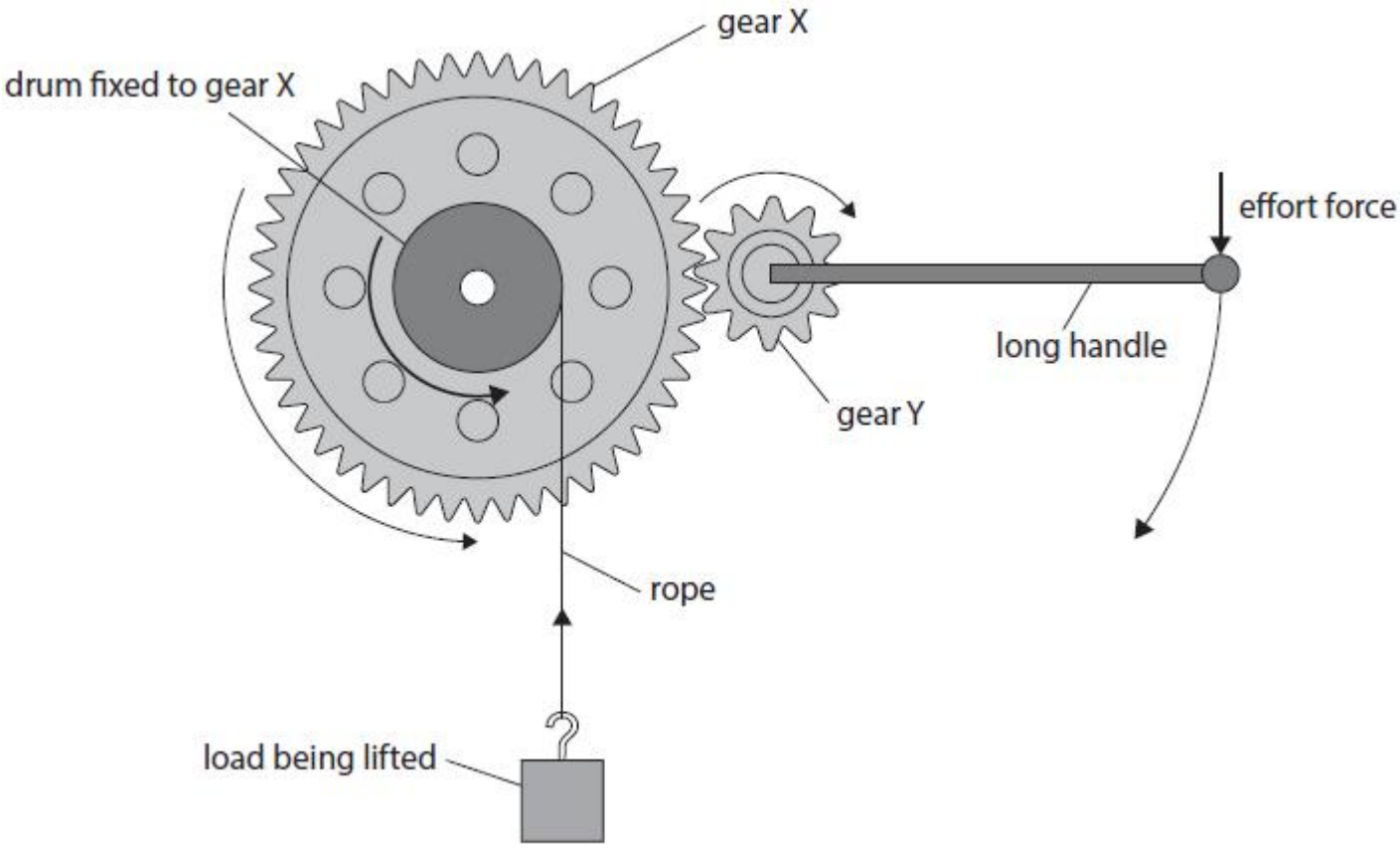

Figure 22

The size of the effort force needed to lift the load is determined by the sizes of the parts of the device.

Explain why this is the case.

Your answer should refer to

- the sizes of the different parts of the device
- how these sizes are used in relevant calculations

(6)

.....

.....

.....

.....

.....

.....

.....

.....

.....

.....

.....

.....

.....

.....

.....

.....

.....

(Total for question = 6 marks)

Q4.

Figure 4 shows two pieces of electrical cable side by side.

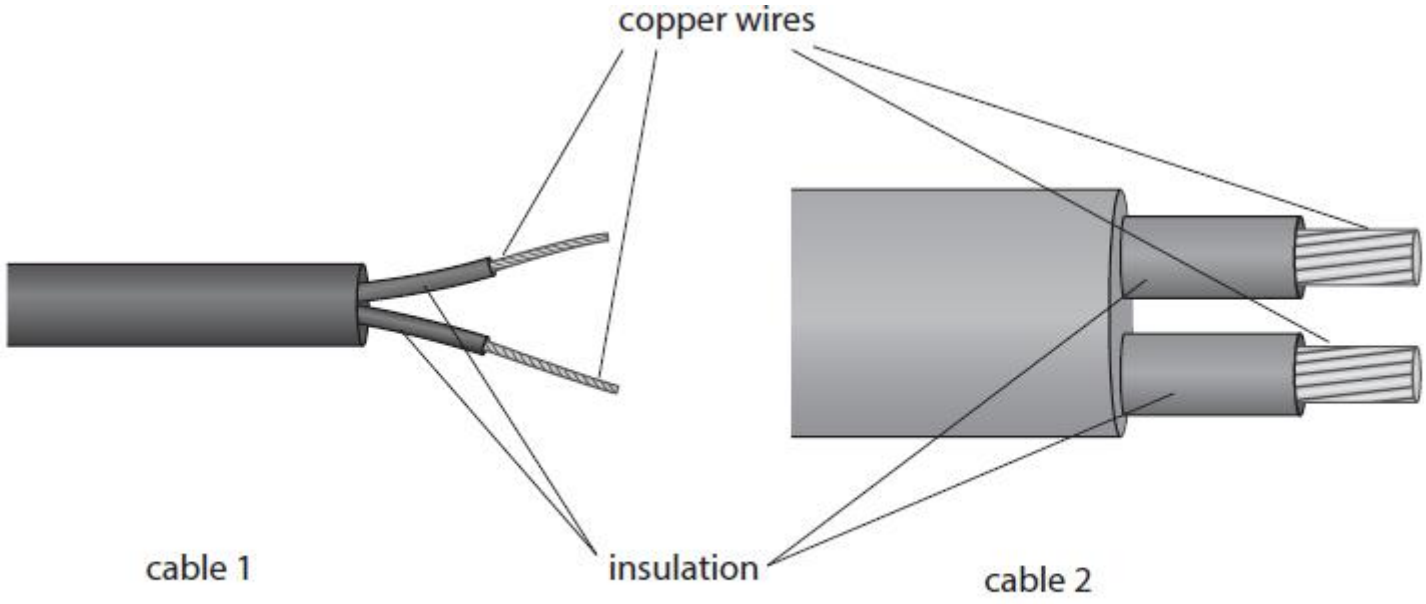

Figure 4

Cable 1 is used to supply electric current to the television.

Cable 2 is used to supply electric current to the house.

Explain why cable 2 is more suitable than cable 1 for supplying electric current to the house.

(2)

.....

.....

.....

.....

(Total for question = 2 marks)

Q5.

The battery inside an electric toothbrush is recharged when the toothbrush is placed on its charger.

Figure 9 shows part of the toothbrush and the charger.

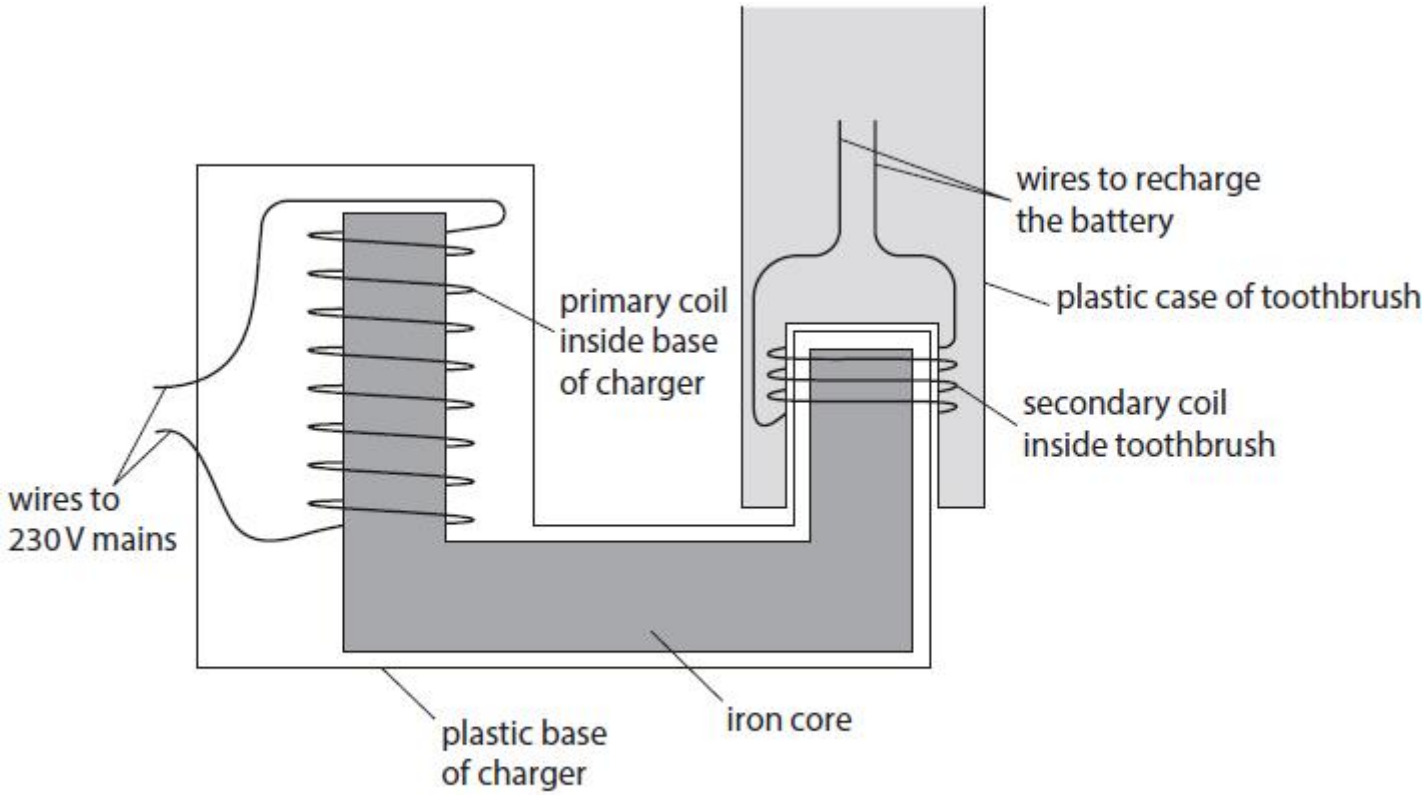

Figure 9

In Figure 9, a diode is connected in series with the rechargeable battery.

Explain why a diode is needed in the toothbrush in this part of the circuit.

(2)

.....

.....

.....

.....

(Total for question = 2 marks)

Q6.

* Figure 20 shows the three-pin plug used to connect the kettle to the mains.

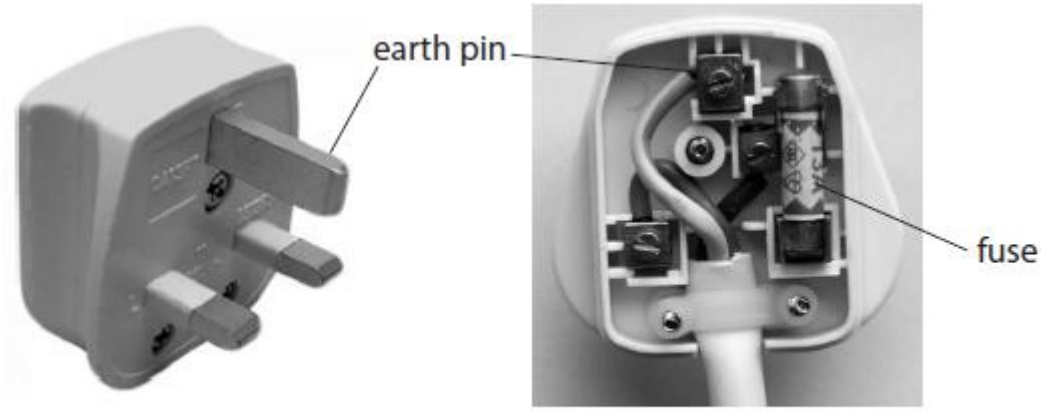

Figure 20

A fault occurs in the kettle causing the live wire to touch the metal case of the kettle.

Explain how the safety features of the plug operate when this fault occurs.

(6)

.....

.....

.....

.....

.....

.....

.....

.....

.....

.....

.....

.....

(Total for question = 6 marks)

Q7.

The unit of work is the joule.

Starting with the meaning of work, we may obtain an equivalent unit of work as Nm.

Using work = $F \times d$

unit of work = unit of force × unit of distance = Nm

The unit of potential difference is the volt.

Explain how, starting with the meaning of potential difference, we may obtain an equivalent unit of potential difference.

(2)

.....

.....

.....

.....

(Total for question = 2 marks)

Q8.

A power transmission wire hangs so that it is at right angles to the Earth's magnetic field.

Although this magnetic field is constant, the cable experiences a changing force.

Explain why the force experienced by the cable changes.

(4)

.....

.....

.....

.....

.....

.....

.....

.....

(Total for question = 4 marks)

Q9.

Figure 17 shows the apparatus used for this investigation.

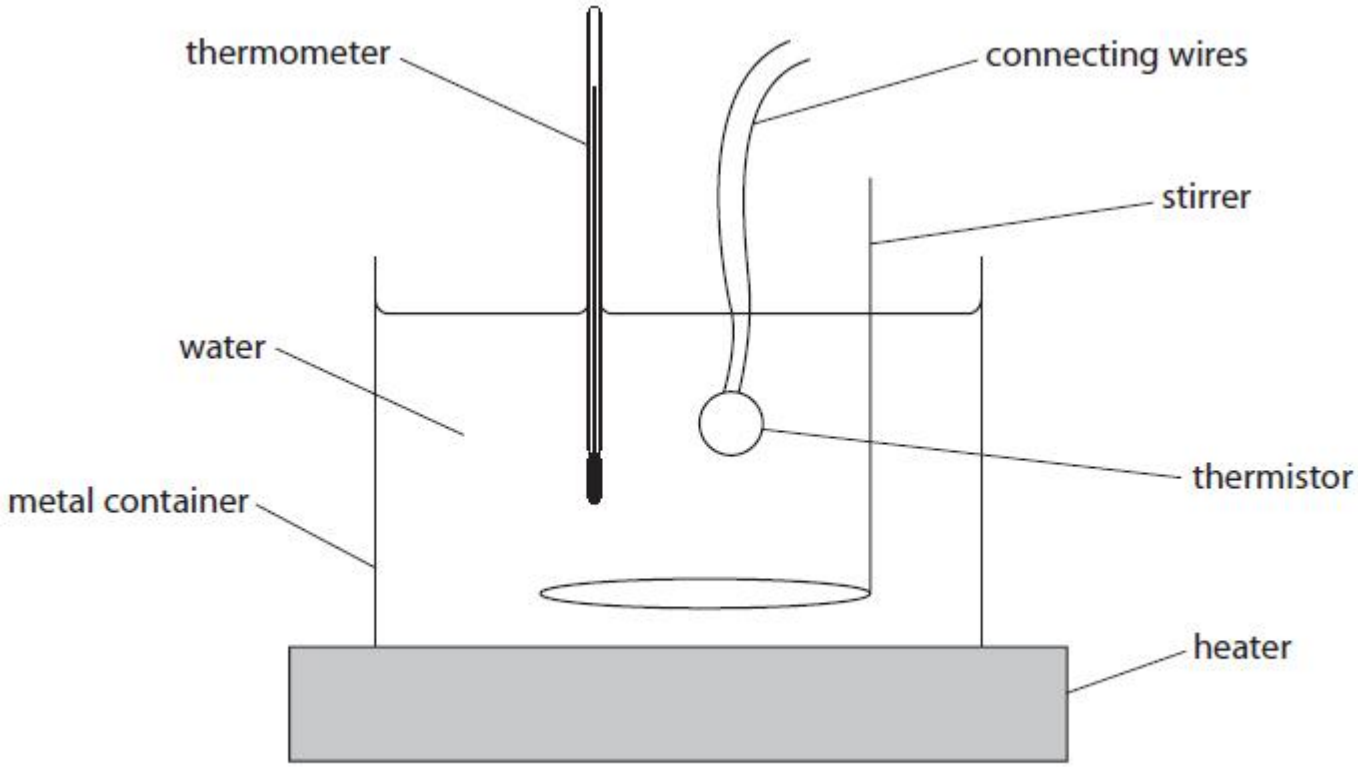

Figure 17

(i) Explain **one** improvement in measurement that the student could make in the investigation.

(2)

.....

.....

.....

.....

In this investigation, the resistance can be measured in two ways.

Method 1 − use an ohmmeter.

Method 2 − use an ammeter and a voltmeter.

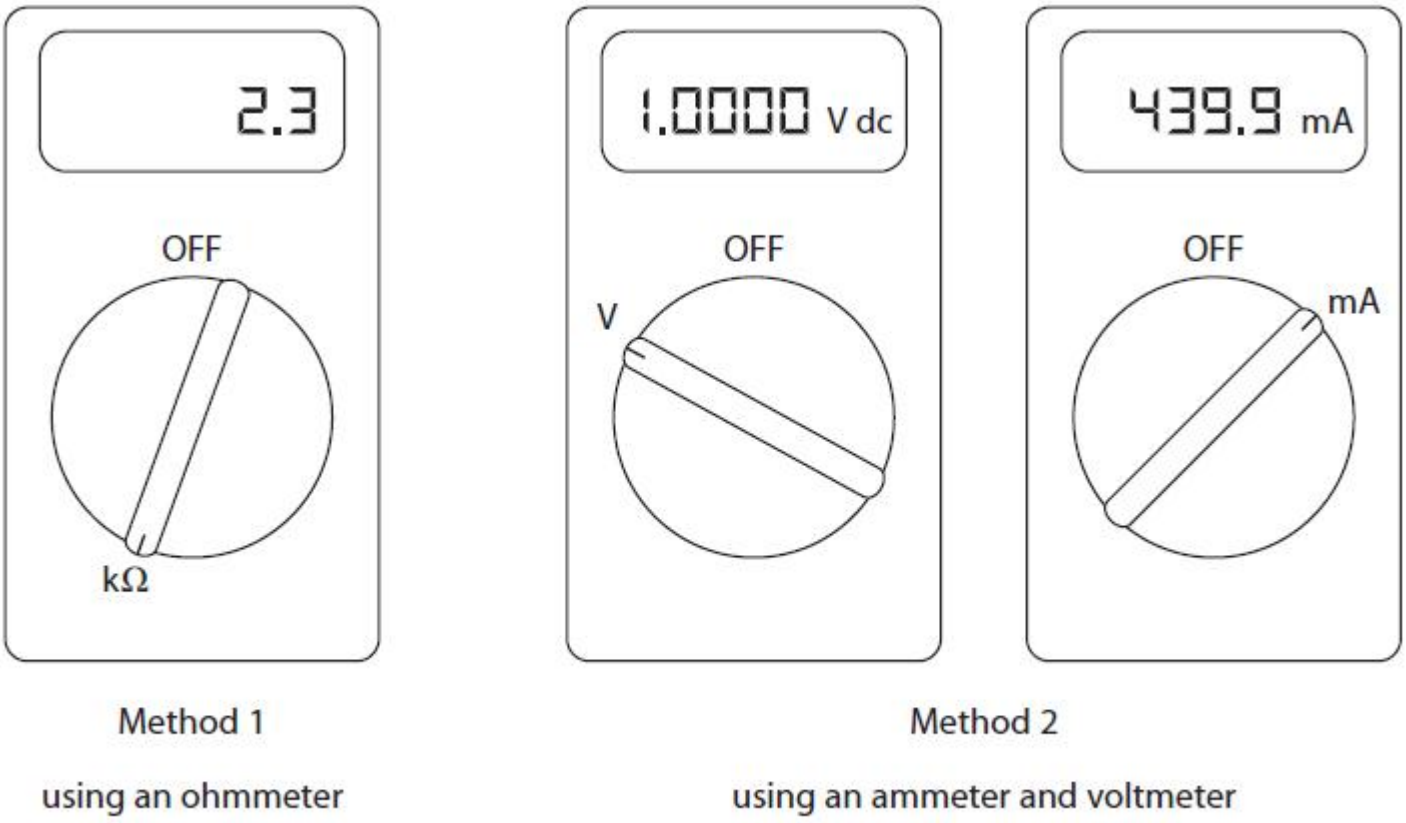

Figure 18

(ii) Explain why method 2 gives more precise results than method 1.

(2)

.....

.....

.....

.....

(Total for question = 4 marks)

Q10.

Figure 3 shows some of the apparatus that students use to determine the resistance of a piece of iron wire.

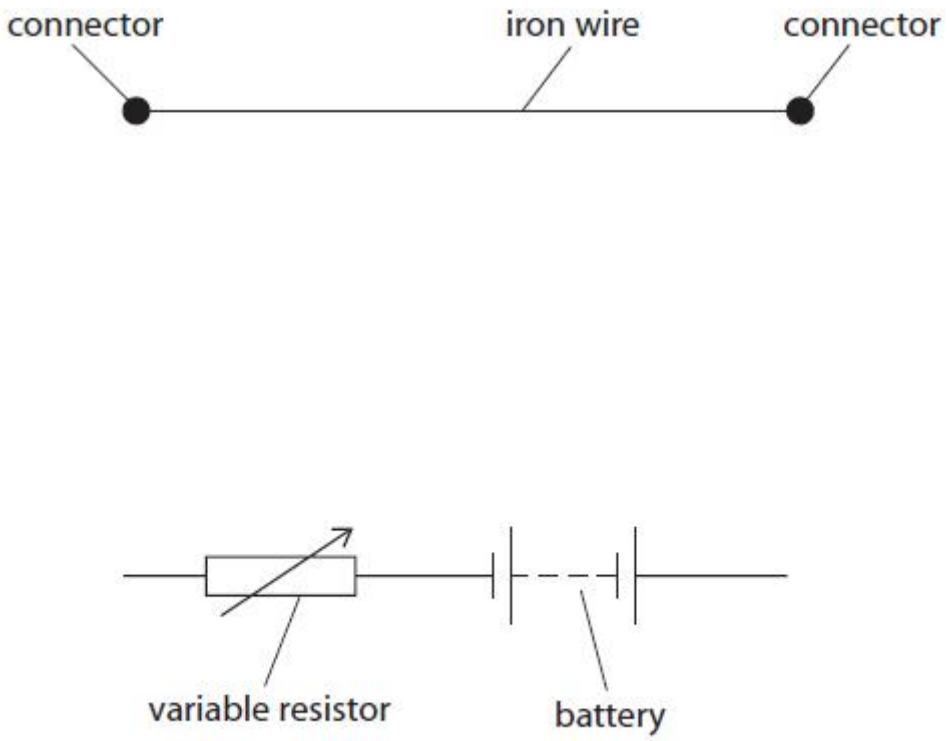

Figure 3

The students extend the investigation to determine how the resistance of the iron wire changes with its length.

(i) Give the name of **one** additional piece of apparatus the students would need.

(1)

.....

(ii) Figure 4 shows a graph of the results.

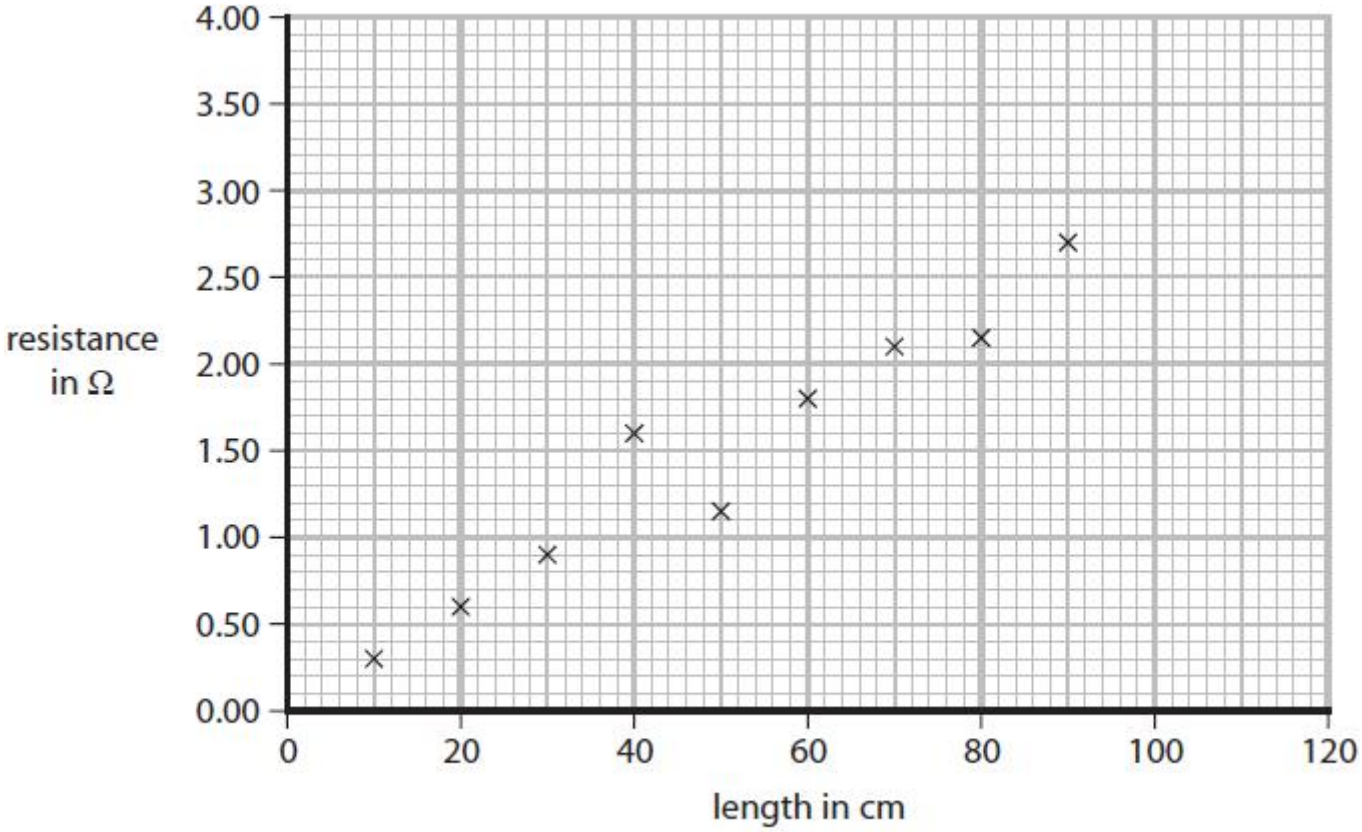

Figure 4

Draw a straight line of best fit on Figure 4.

(1)

(iii) Use Figure 4 to estimate the resistance of a 100 cm length of the iron wire.

(1)

resistance = ... Ω

(iv) The variable resistor shown in Figure 3 is used to prevent the iron wire from becoming too hot.

Explain how the variable resistor is used to prevent the iron wire from becoming too hot.

(2)

.....

.....

.....

.....

(Total for question = 5 marks)

Mark Scheme

Q1.

Question number	Answer	Additional guidance	Mark
(i)	selection and substitution (1) (R=) $\frac{9}{6}$ (x 10^{-3}) evaluation (1) (resistance =) 1500 (Ω)	 1.5 k(Ω) allow 1500 to any other power of ten for 1 mark award full marks for correct answer without working.	**(2)** **AO2**

Question number	Answer	Additional guidance	Mark
(ii)	(connect a variable) resistor (1) in series (with the resistor) (1)	accept thermistor/ light dependent resistor/ LDR/ lamp / battery / cell / LED / diode between battery and resistor	**(2)** **AO1**

Q2.

Question Number:	Answer	Additional Guidance	Mark
	an explanation linking:	throughout accept atoms / ions for lattice accept charges / charged particles for electrons	**(2)** AO 1 1
	collisions between electrons and lattice (1) lattice {vibrates / moves} **more** (1)	allow collision between electrons in this context KE of lattice increases KE of electrons decreases	

Q3.

Question number	Indicative content	Mark
*	Answers will be credited according to candidate's deployment of knowledge and understanding of the material in relation to the qualities and skills outlined in the generic mark scheme. The indicative content below is not prescriptive and candidates are not required to include all the material which is indicated as relevant. Additional content included in the response must be scientific and relevant. Relevant sizes of components • Length of bar • Number of teeth on gear(s) • Size / circumference / radius / diameter of gear(s) • Size / circumference radius / diameter of drum Equations • Work done = force x distance moved • Moment of force = force x (perpendicular) distance (normal to the direction of the force) • Efficiency = useful energy transferred / total energy supplied • Speed = distance travelled / time taken • Gear ratio determines relative rotational speed of gears • Power = work done ÷ time taken Links between equations and sizes of components • Work done by effort = force x distance moved by (end of) handle around rotations • Work done on load = force x distance moved/raised • Moment of effort = effort x length of handle • Moment of force of gear Y on gear X = force × radius of Y • Moment of load on drum = load x radius of drum	**(6)** **AO1** **AO3**

Level	Mark	Descriptor
	0	• No awardable content
Level 1	1–2	• Demonstrates elements of physics understanding, some of which is inaccurate. Understanding of scientific, enquiry, techniques and procedures lacks detail. (AO1) • Analyses the scientific information but understanding and connections are flawed. (AO3)
Level 2	3–4	• Demonstrates physics understanding, which is mostly relevant but may include some inaccuracies. Understanding of scientific ideas, enquiry, techniques and procedures is not fully detailed and/or developed. (AO1) • Analyses the scientific information and provides some logical connections between scientific enquiry, techniques and procedures. (AO3)
Level 3	5–6	• Demonstrates accurate and relevant physics understanding throughout. Understanding of the scientific ideas, enquiry, techniques and procedures is detailed and fully developed. (AO1) • Analyses the scientific information and provide logical connections between scientific enquiry, techniques and procedures. (AO3)

Level	Mark	Additional Guidance	General additional guidance – the decision within levels e.g. - At each level, as well as content, the scientific coherency of what is stated will help place the answer at the top, or the bottom, of that level.
	0	No rewardable material.	
Level 1	1–2	Additional guidance Isolated sizes **or** equations	Possible candidate responses How long the handle is and how big the gears are.
Level 2	3–4	Additional guidance Size linked to a relevant equation	Possible candidate responses Moment of = force x distance so a long handle makes it easier to turn
Level 3	5–6	Additional guidance Use of size in a calculation	Possible candidate responses A long bar means that the distance moved by the effort in one turn of the handle is bigger than the distance moved by the load. Because work done = force x distance, the effort is less than the load for the same amount of work done.

Q4.

Question number	Answer	Additional guidance	Mark
	an explanation that links any **two** attributes of cable 2 compared with cable 1 from	accept reverse arguments	**(2) AO3**
	(wires have a) greater (cross-sectional) area (1)	(wires are) thicker/ wider / heavier / larger	
	lower resistance (1)		
	(safely carry a) higher current (1)	less likely to overheat if no other marks scored allow 1 mark for less likely to be damaged due to more insulation OWTTE	

Q5.

Question number	Answer	Additional guidance	Mark
	an explanation linking		**(2) AO1**
	a battery supplies d.c. (1)	a battery requires d.c. (to recharge) battery would be discharged (by a.c) a.c. (from secondary) unsuitable for battery	
	(diode) only allows current/ charge flow in one direction (1)	diode rectifies / converts a.c. to d.c.	

Q6.

Question Number	Answer	Mark
	Answers will be credited according to candidate's deployment of knowledge and understanding of the material in relation to the qualities and skills outlined in the generic mark scheme. The indicative content below is not prescriptive and candidates are not required to include all the material which is indicated as relevant. Additional content included in the response must be scientific and relevant. AO1(6 marks) AO1 Earth • earth wire connected to metal case • metal case is a conductor • (when live touches case) resistance between live and earth is very low • (very) large current to earth through (low resistance) earth wire • case is kept at same potential as earth • so cannot get a shock if (earthed) person touches metal case Fuse • made of thin wire • fuse connected between live pin and wire to kettle • temperature of wire depends on current in it • when the current is (very) large, the temperature of the wire increases beyond melting point of wire • fuse (wire) breaks • disconnects mains supply to kettle • prevents damage to house wiring • (now) there is no possibility of live wire in kettle being at mains voltage	**(6)**

Descriptor
• No rewardable material.
• Demonstrates elements of physics understanding, some of which is inaccurate. Understanding of scientific ideas lacks detail. (AO1) • Presents an explanation with some structure and coherence. (AO1)
• Demonstrates physics understanding, which is mostly relevant but may include some inaccuracies. Understanding of scientific ideas is not fully detailed and/or developed. (AO1) • Presents an explanation that has a structure which is mostly clear, coherent and logical. (AO1)
• Demonstrates accurate and relevant physics understanding throughout. Understanding of the scientific ideas is detailed and fully developed. (AO1) • Presents an explanation that has a well-developed structure which is clear, coherent and logical. (AO1)

Summary for guidance			
Level	**Mark**	**Additional Guidance**	**General additional guidance – the decision within levels** e.g. - At each level, as well as content, the scientific coherency of what is stated will help place the answer at the top, or the bottom, of that level.
	0	No rewardable material.	
Level 1	1–2	Additional guidance isolated facts about either fuse or earth	Possible candidate responses The fuse blows when there is a fault. The earth stops you from getting shock
Level 2	3–4	Additional guidance facts about fuse and earth that are linked to provide an explanation of the operation of either the fuse or the earth. OR a well-developed explanation of the operation of fuse or earth	Possible candidate responses The earth wire is connected to the (metal) case of the kettle. The wire in fuse melts when current becomes too big. OR A large current flows through the wires in the kettle. The wire in the fuse heats up and melts. This disconnects the kettle from the mains supply.
Level 3	5–6	Additional guidance explanation of the operation of both the fuse and the earth one explanation may be more developed than the other but both fuse and earth must be explained.	Possible candidate responses A large current flows through the wires in the kettle. The wire in the fuse heats up and melts. The earth wire keeps (exposed) metal parts at earth potential and prevents shocks

Q7.

Question Number	Answer	Additional Guidance	Mark
	an explanation linking (potential difference) is energy (transferred) per unit charge (passed) (1) so units of p.d. = J/C **or** Nm/C (1)	 allow pd = $\frac{\text{energy}}{\text{charge}}$	**(2)** **AO1.1**

Q8.

Question number	Answer	Additional guidance	Mark
	An explanation that combines identification – understanding (1 mark) and reasoning/justification – understanding (3 marks): • the transmission wire carries an alternating current (1) • the force is caused by this current which varies in size and direction (1) • the direction of this force depends on the direction of the current so the direction of the force also changes (1) • the magnitude of this force depends on the magnitude of the current so the magnitude of the force also changes (1)	allow responses that link the changes in the force to the interaction of the changing field around the wire with the constant field of the Earth	**(4)**

Q9.

Question number	Answer	Additional guidance	Mark
(i)	explanation linking a suitable improvement (1) with a matching reason (1)	for example place thermometer close(r) to the thermistor stirring digital thermometer thermometer measures same temperature as thermistor to get uniform temperature (for stirring) thermometer with better resolution or scale	(2) AO3.3

Question number	Answer	Additional guidance	Mark
(ii)	an explanation including: method 2 has measurements to more significant figures / more decimal places (than method 1) (1) so the calculated answer can have more s.f.'s / d.p.'s (1)	 may be shown via a calculation accept an alternative argument in terms of consistency in final calculated answer ignore restating stem of question – e.g. so more precise ignore more accurate	(2) AO3.2

Q10.

Question number	Answer	Additional guidance	Mark
(i)	**one** from (1) metre rule / metre stick / ruler / (measuring) tape / crocodile clip / other clip / wire cutters / pliers / sliding contact jockey / more (iron) wire	accept scissors ignore additional electrical devices such as ohmmeter / multimeter	**(1)** **AO1**

Question number	Answer	Additional guidance	Mark
(ii)	(ii) Figure 4 shows a graph of the results. 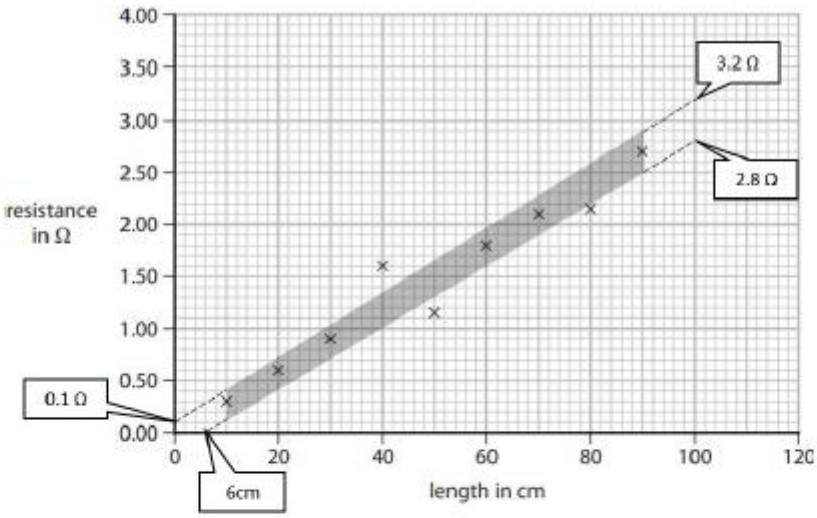 	accept any straight line within the shaded range judge by eye. ignore extrapol-ation for this marking point	**(1)** **AO2**

Question number	Answer	Additional guidance	Mark
(iii)	any number between 2.7 and 3.3 inclusive	allow ecf from (ii) ±0.1Ω	**(1)** **AO2**

Question number	Answer	Additional guidance	Mark
(iv)	explanation linking any **two** from: (variable) resistor increases the resistance (of the circuit) (1) (therefore) keeps the current constant / small(er) (1) because **current** increases temperature of the (iron) wire (1)	accept flow of electrons / charge for current in this context reduces current / limits the current ignore slows the current / charge accept current heats up (iron) wire accept for two marks: adjust variable resistor to keep current constant / small	**(2)** **AO2**