Questions

Q1.

Figure 3 shows a lamp connected to a d.c. power supply.

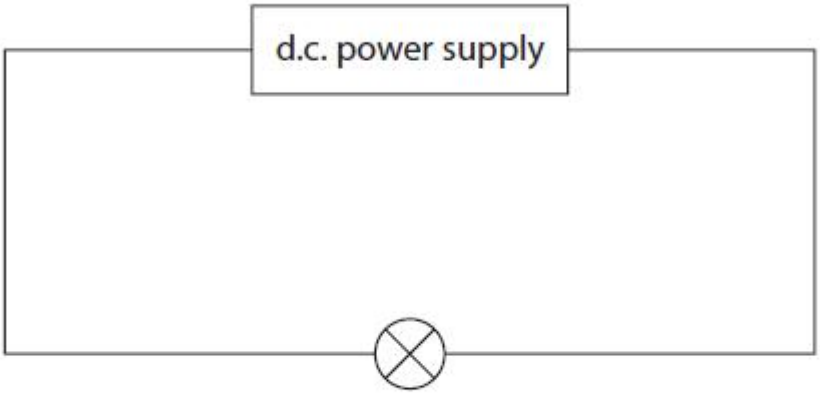

Figure 3

The power supply provides a potential difference (voltage) of 4.5 V.

The current in the lamp is 0.30 A.

Another **identical** lamp is added to the circuit, as shown in Figure 4.

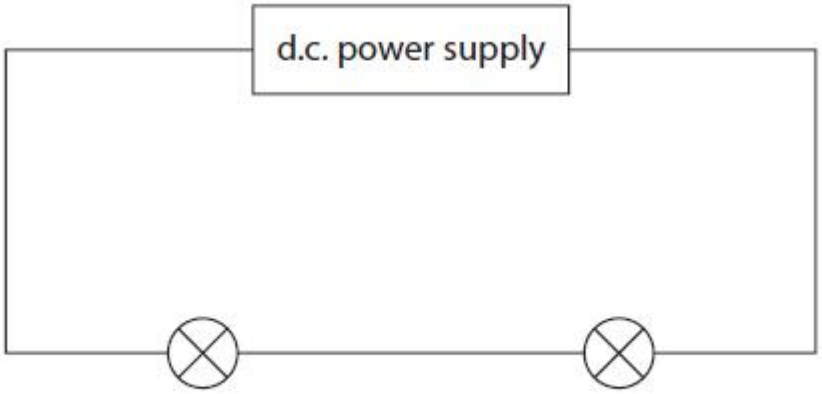

Figure 4

The power supply provides the same potential difference as it provided in the circuit in Figure 3.

State and explain the difference between the brightness of the lamp in Figure 3 and the brightness of a lamp in Figure 4.

(3)

.....

.....

.....

.....

.....

(Total for question = 3 marks)

Q2.

Figure 18 shows identical filament lamps connected together to a 12 V power supply.

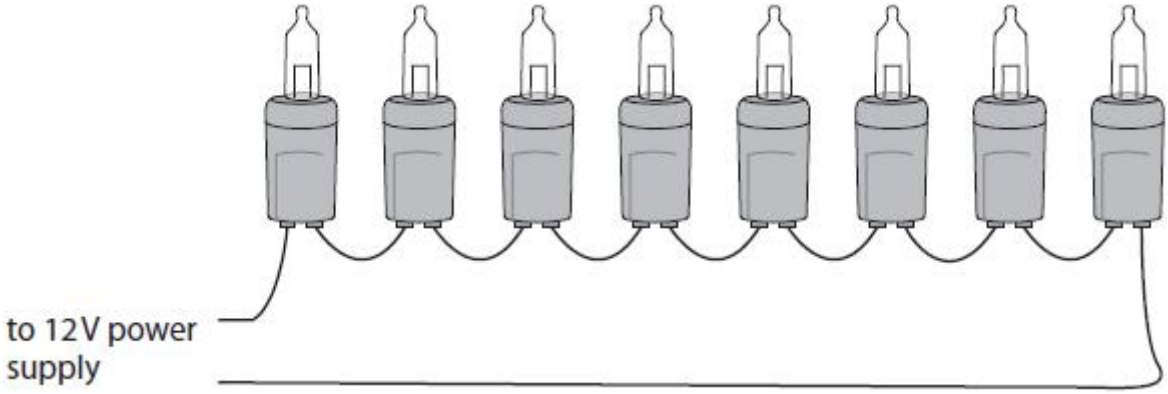

Figure 18

(i) Calculate the potential difference across each lamp.

(1)

potential difference = ... V

(ii) The power output of each lamp is 0.75 W

Calculate the resistance of each lamp.

(4)

resistance = ... Ω

(Total for question = 5 marks)

Q3.

Answer the question with a cross in the box you think is correct ☒. If you change your mind about an answer, put a line through the box ☒ and then mark your new answer with a cross ☒.

Which of these symbols is used to represent a thermistor in an electrical circuit?

(1)

☐ **A**

☐ **B** 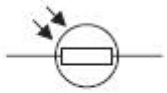

☐ **C** 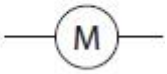

☐ **D**

(Total for question = 1 mark)

Q4.

Answer the question with a cross in the box you think is correct (☒). If you change your mind about an answer, put a line through the box (☒) and then mark your new answer with a cross (☒).

Figure 4 is a circuit diagram.

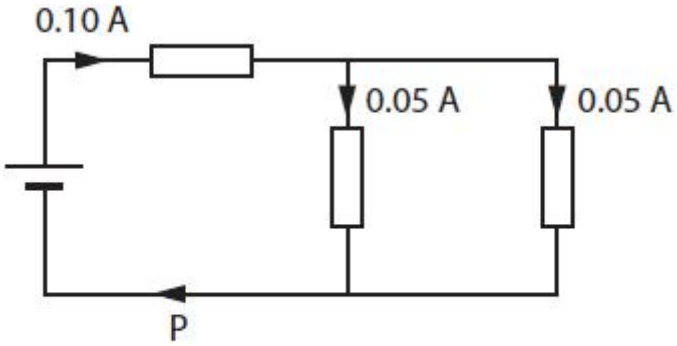

Figure 4

The current at P is

☐ **A** 0.05 A
☐ **B** 0.10 A
☐ **C** 0.15 A
☐ **D** 0.20 A

(Total for question = 1 mark)

Q5.

Answer the question with a cross in the box you think is correct (☒). If you change your mind about an answer, put a line through the box (☒) and then mark your new answer with a cross (☒).

Which of these equations is correct?

(1)

☐ **A** $\text{time} = \dfrac{\text{charge}}{\text{current}}$

☐ **B** $\text{time} = \text{charge} \times \text{current}$

☐ **C** $\text{time} = \dfrac{\text{power}}{\text{energy}}$

☐ **D** $\text{time} = \text{power} \times \text{energy}$

(Total for question = 1 mark)

Q6.

The graphs P, Q and R in Figure 10 each show how the current in a component varies with the potential difference (voltage) across that component.

In each box, state the name of the component that matches the graph.

(3)

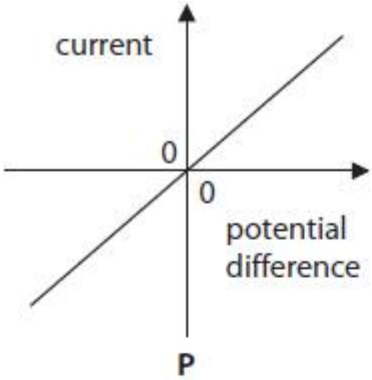

.....

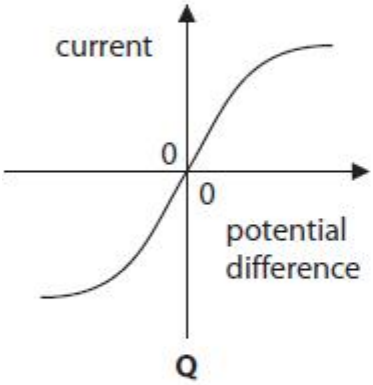

.....

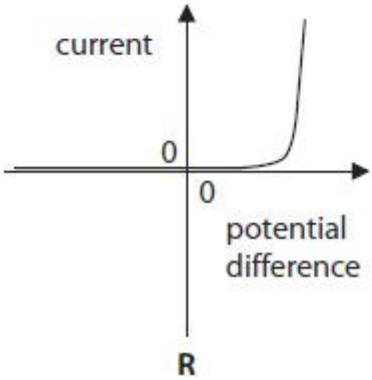

.....

Figure 10

(Total for question = 3 marks)

Q7.

Explain how current varies with potential difference for the component that matches graph R. Refer to the resistance of the component in your answer.

(3)

.....

.....

.....

.....

.....

.....

.....

(Total for question = 3 marks)

Q8.

(a) The picture shows a wind-powered generator used to produce electricity for a house.

© The Wall Street Journal

(i) The table shows some electrical components.
Put ticks in the table next to the **two** components the generator must contain.

(2)

component	✓
ammeter	
coil of wire	
battery	
magnet	
voltmeter	

(ii) Explain why the voltage produced by this wind-powered generator is not always the same.

(2)

.....

.....

.....

.....

(iii) It would cost the homeowner 15 p to buy 1.0 kW h of electrical energy from the National Grid.

His generator has a maximum power of 2.0 kW.
The generator produces energy at this maximum power for 3 hours.
Calculate how much it would cost to buy the same amount of energy from the National Grid.

(2)

cost = ... p

(b) An electric kettle is plugged into a 230 V mains supply.
It has a power of 2.5 kW.

Use this equation to calculate the current in the kettle.

$$\text{current (in amps)} = \frac{\text{power (in watts)}}{\text{voltage (in volts)}}$$

(3)

current = ... A

(c) Suggest why a 2 kW wind-powered generator may not supply all the electrical energy needed in a house.

(1)

.....

.....

.....

.....

Mark Scheme

Q1.

Question number	Answer	Additional guidance	Mark
	an explanation linking any **three** from: lamp in second circuit is dimmer (than lamp in first circuit) (1) current in second circuit is less (than in first circuit) (1) potential difference / voltage across each lamp (in second circuit is) less / shared (1) idea that power of each lamp (in second circuit) is less / shared (1) the (total) resistance of the second circuit is more (than in first circuit) (1)	accept reverse arguments throughout	**(3)** **AO1.1**

Q2.

Question Number:	Answer	Additional Guidance	Mark
(i)	1.5 (V)	accept $\frac{12}{8}$ or $\frac{3}{2}$ or $1\frac{1}{2}$	**(1)** AO 3 1b

Question Number:	Answer	Additional Guidance	Mark
(ii)		allow ecf from a(i) for all marking points	**(4)** AO 2 1
	recall and substitution (1) $0.75 = I \times 1.5$	substitution and rearrangement in either order	
	rearrangement (1) $(I =) \frac{0.75}{1.5}$ (= 0.5)		
	recall, substitution and rearrangement (1) $R = \frac{1.5}{0.5}$	allow ecf of current from MP2 for this mark point only	
	evaluation (1) (R =) 3.0 (Ω)	allow other approaches such as $P = \frac{V^2}{R}$ scores 1 mark $0.75 = \frac{1.5^2}{R}$ scores 2 marks $R = \frac{(1.5)^2}{0.75}$ scores 3 marks award full marks for correct answer without working	

Q3.

Question Number	Answer	Mark
	The only correct answer is D **A is incorrect** because that is the symbol for a diode **B is incorrect** because that is the symbol for a light dependent resistor **C is incorrect** because that is a symbol for a motor	**(1)**

Q4.

Question Number	Answer	Mark
	The only correct answer is B ***A, C** and **D** are not correct because they do not add up to the current entering the junction AND they do not equal the current coming from the battery*	**(1)** **AO1.1**

Q5.

Question Number	*Answer*	Mark
	The only correct answer is A $\text{time} = \frac{\text{charge}}{\text{current}}$ ***B, C and D are incorrect expressions not yielding time as the subject of an equation e.g. B would be 'Coulomb Amps', not recognisable as a physical quantity. Similar arguments for C and D***	**(1)** **AO1.1**

Q6.

Question number	Answer	Mark
	P (ohmic) resistor/wire (1) Q (filament) lamp (1) R (semiconducting) diode (1)	(3)

Q7.

Question number	Answer	Mark
	An answer that makes reference to: Identification – knowledge (1 mark) and reasoning / justification – knowledge (2 marks) • to begin with (there is) no current as V increases, then, after a certain voltage, the current rises • sharply / with an increasing gradient • associated with a decreasing resistance	(3)

Q8.

Question Number	Answer	Acceptable answers	Mark
(a)(i)	**component** ☐ ammeter coil of wire ☐ battery magnet ☐ voltmeter	one mark for each correct tick deduct 1 mark for each extra tick	**(2)**

Question Number	Answer	Acceptable answers	Mark
(a)(ii)	Explanation linking any two of • wind (speed) is not constant (1) • voltage depends on wind speed (1)	need idea of varying wind {electrical energy / electricity} depends on wind speed higher wind speed gives {higher voltage/more electrical energy/more electricity} = 2 marks voltage is alternating = 2 marks	**(2)**

Question Number	Answer	Acceptable answers	Mark
(a)(iii)	(saving) = 2 × 3 × 15 (1) 90 (p) (1)	award full marks for correct answer with no working 2 × 3 × 0.15 (£) 0.90	**(2)**

Question Number	Answer	Acceptable answers	Mark
(b)	power = 2500 (W) (1) (current) = $\frac{2500}{230}$ (1) **ecf** 11 (A) (1)	award full marks for correct answer with no working [2.5/230 is 1 mark for these 2] 10.9 / 10.8... **accept** {0.01... / 0.11... / 1.1...} for 2 marks	**(3)**

Question Number	Answer	Acceptable answers	Mark
(c)	EITHER sometimes no / very little wind (1) OR some appliances rated above 2 kW (1)	need wind vague references to weather are insufficient may use more than one appliance at once **or** house needs more (than 2kW) power not enough power for kettle **ignore** references to electrical energy / electricity	**(1)**