Questions

Q1.

Answer the question with a cross in the box you think is correct (☒). If you change your mind about an answer, put a line through the box (☒) and then mark your new answer with a cross (☒).

A student measures the length of a spring when it is horizontal and when it is vertical, as shown in Figures 15a and 15b.

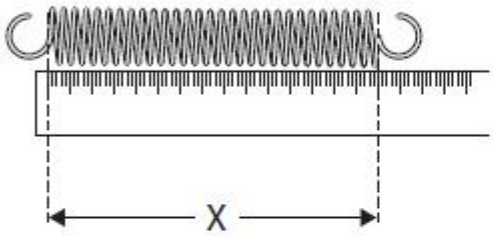

Figure 15a

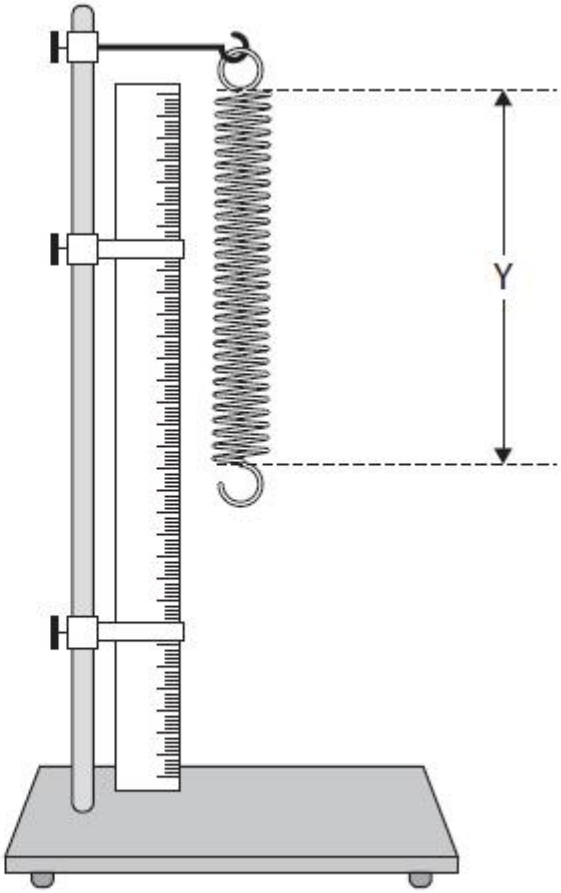

Figure 15b

The length, Y, of the vertical spring in Figure 15b is greater than the length, X, of the spring in Figure 15a.

(i) Give a reason why the length of the spring in Figure 15b is greater than the length of the spring in Figure 15a.

(1)

.....

.....

(ii) The student adds some weights to the end of the spring, as shown in Figure 16b.

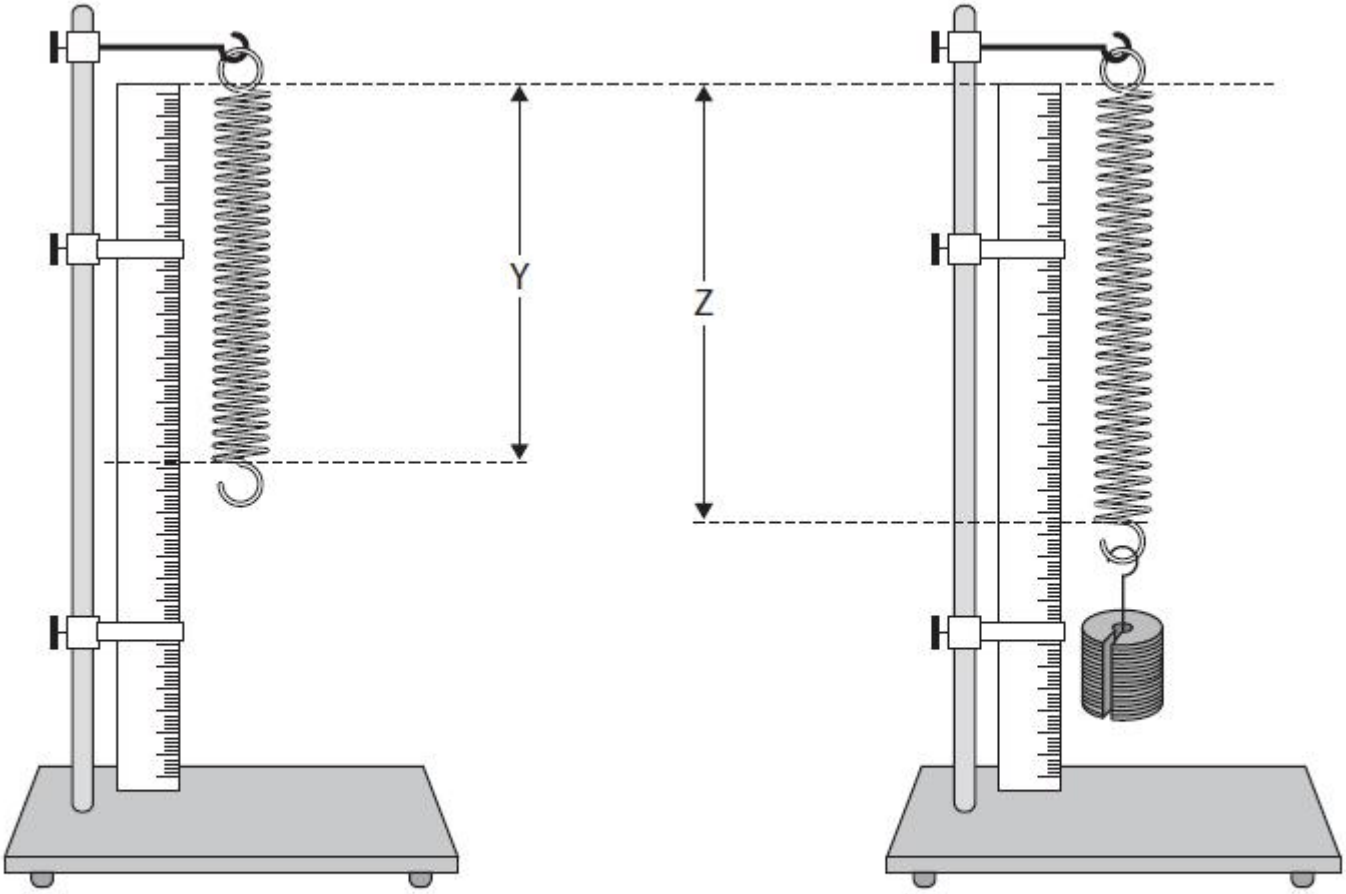

Figure 16a **Figure 16b**

(Source: https://www.shalom-education.com/courses/ks3-physics/lessons/motion-and-forces/topic/deformation-and-hookes-law/)

The extension of the spring due to these added weights is equal to

(1)

- ☐ **A** Z − Y
- ☐ **B** Z + Y
- ☐ **C** Z
- ☐ **D** Y

(Total for question = 2 marks)

Q2.

Figure 14 shows a spring standing on a table.

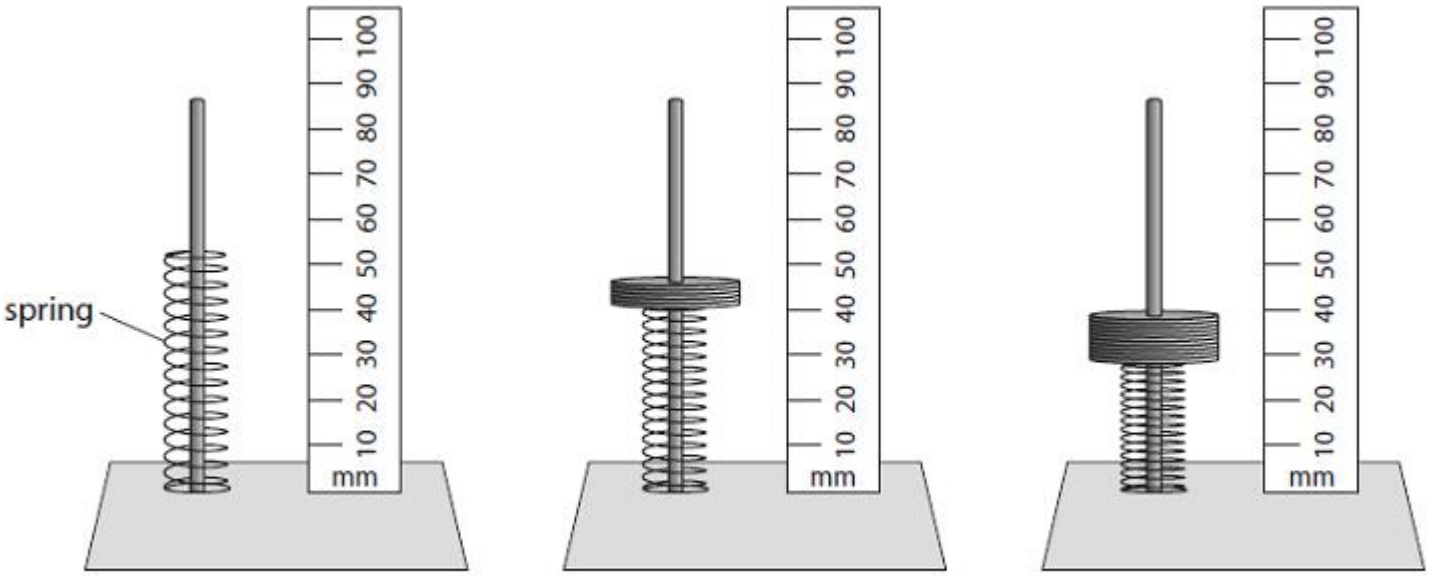

Figure 14a **Figure 14b** **Figure 14c**

Weights are added to the spring as shown in Figures 14b and 14c.

(i) Estimate the original length of the spring as shown in Figure 14a.

(1)

original length = ... mm

(ii) Describe how the reduction in the length of the spring when weights are added can be determined.

(2)

.....

.....

.....

.....

(iii) State **two** ways that the experimental procedure could be improved.

(2)

1 .....

.....

2 .....

.....

(iv) Give **one** reason why the reduction in length eventually reaches a limit as more weights are added.

(1)

.....

.....

(Total for question = 6 marks)

Q3.

A student sets up the apparatus shown in Figure 9.

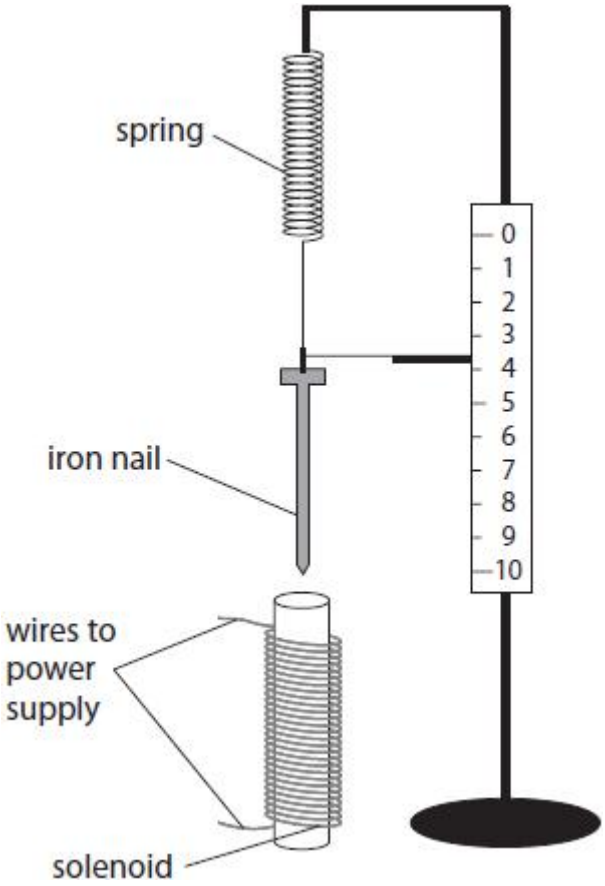

Figure 9

(i) When the current in the solenoid is switched on, the solenoid attracts the iron nail.

Describe how the student could use this apparatus to investigate how the size of the current in the solenoid affects the force of attraction between the solenoid and the iron nail.

(4)

.....

.....

.....

.....

.....

.....

.....

.....

(ii) The spring constant of a different spring is 24 N/m.

The spring is extended from its unstretched length by 12 cm.
Calculate the energy transferred in extending the spring by 12 cm.
Use an equation selected from the list of equations at the end of this paper.

(2)

energy transferred = ... J

(Total for question = 6 marks)

Q4.

This question is about pressure.

Figure 5 shows windows in an aeroplane.

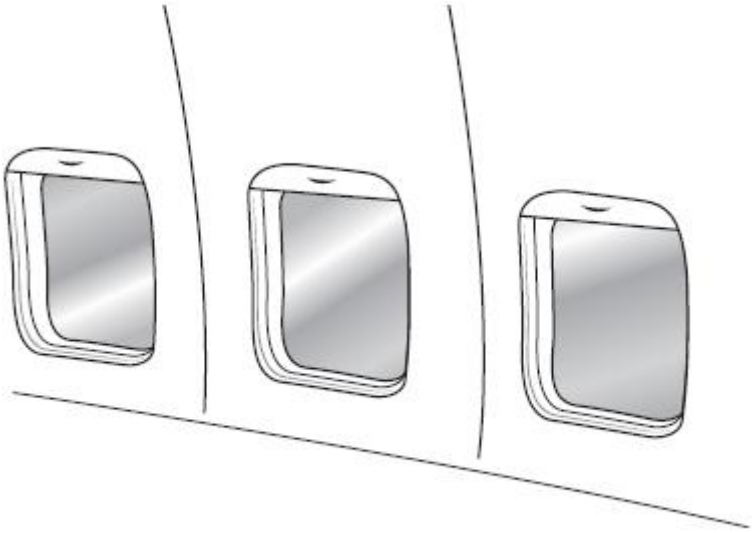

Figure 5

The aeroplane is high above the Earth's surface.

The atmospheric pressure outside the aeroplane is 23 000 Pa.

The air pressure inside the aeroplane is 80 000 Pa.

(i) Calculate the pressure difference between inside and outside of the aeroplane.

(1)

pressure difference = ... Pa

(ii) The surface area of the window is 0.094 m^2.

Calculate the size of the force on the window due to the cabin air pressure of 80 000 Pa.
Use the equation

$$P = \frac{F}{A}$$

(2)

force = ... N

(iii) On the same aeroplane, a different window has a smaller surface area.

Explain how the force due to the air pressure inside the cabin on the small window differs from the force on the larger window.

(2)

.....

.....

.....

.....

(iv) Figure 6 shows a cross-section through the aeroplane including one window.

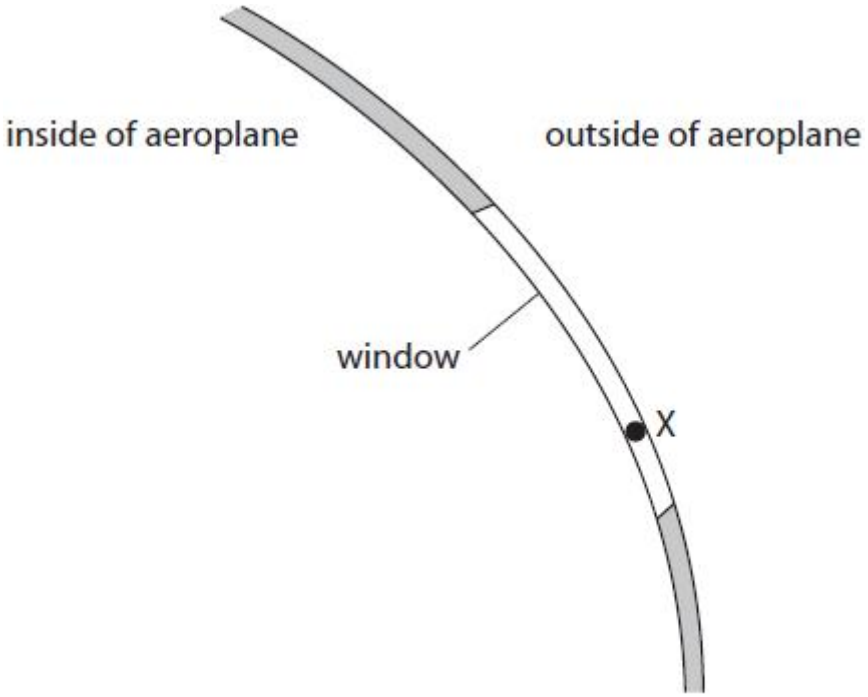

Figure 6

Draw an arrow on Figure 6 to show the direction of the resultant force due to the air pressure inside the cabin on the window at point X.

(2)

(Total for question = 7 marks)

Q5.

Figure 17 shows a crane lifting a concrete block from the bottom of a deep pool of water.
The top of the block is a distance, *h*, below the surface of the water.

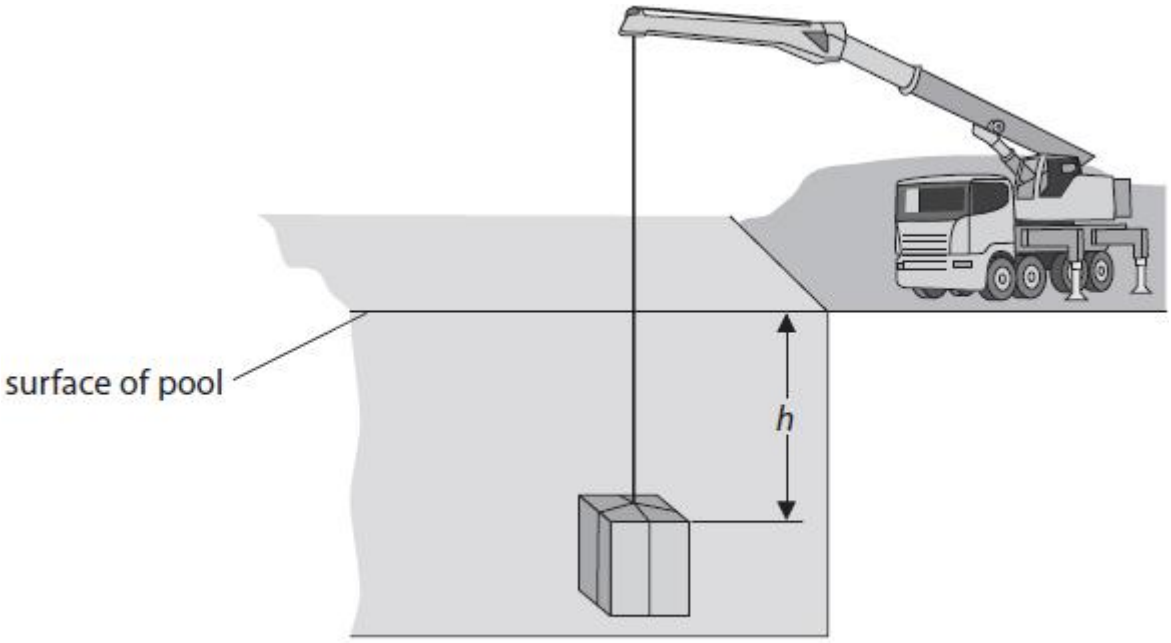

Figure 17

The force on the top of the block due to the water above it is 41 000 N.

The pressure due to the water on the top surface of the block is 66 000 Pa.

(i) Calculate the area of the top surface of the block.

(2)

area of the top surface of the block = ... m^2

(ii) The density of water is 1000 kg/m^3.

Calculate the distance, *h*, between the top of the block and the surface of the water.
Gravitational field strength, *g*, is 10 N/kg.
Use an equation selected from the list of equations at the end of this paper.

(2)

h = ... m

(iii) Explain why there is an upthrust produced by the water on the block.

(2)

.....

.....

.....

.....

* (iv) The crane raises the block until it is high enough out of the water to be loaded on to a lorry.
The block moves upwards at a constant speed even though the lifting force in the cable changes.
Figure 18 shows the graph of how the lifting force changes while the block is being raised.

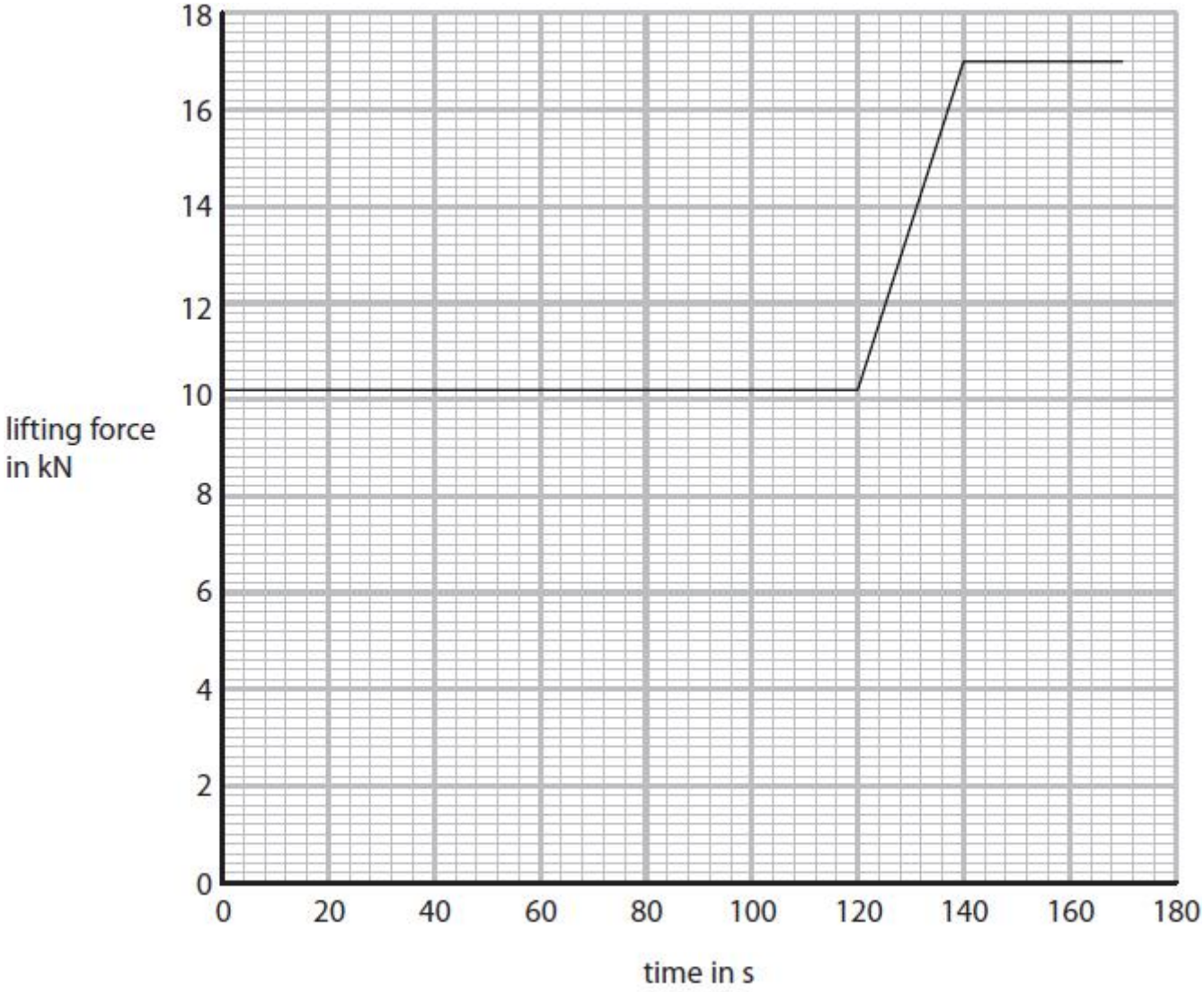

Figure 18

Explain why the lifting force changes as shown on the graph in Figure 18.
Include calculation(s) in your answer.

(6)

.....

.....

.....

.....

.....

.....

.....

.....

.....

.....

.....

.....

.....

.....

.....

(Total for question = 12 marks)

Q6.

The extension of the spring in Figure 16b is now determined for different weights added to the spring up to a maximum of 6 N.

Figure 17 shows a graph of the results.

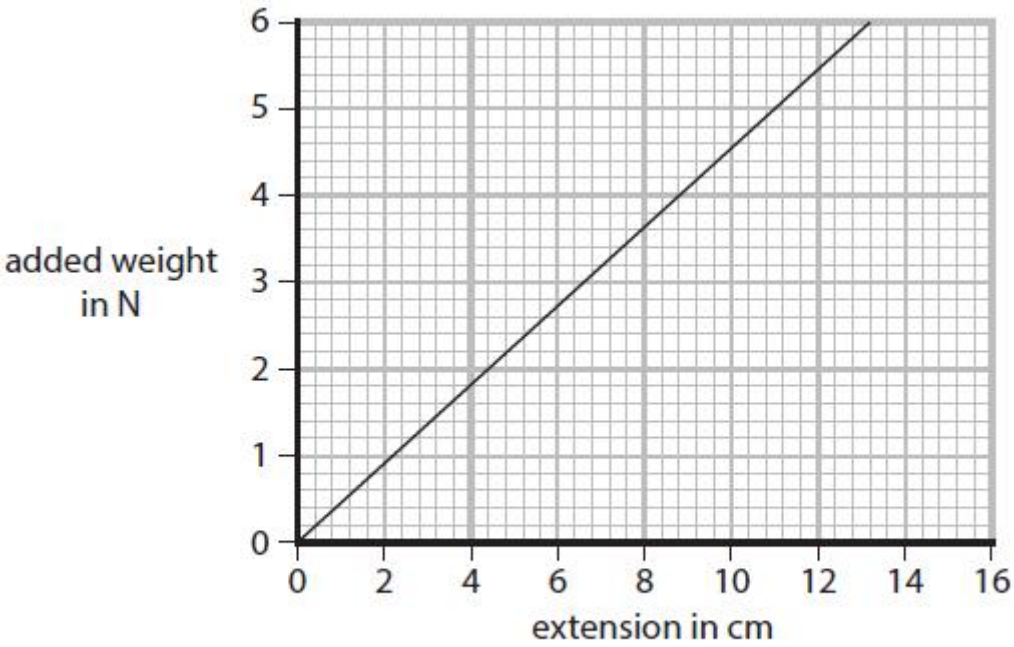

Figure 17

(i) The increase in potential energy stored in the spring is equal to the area under the graph in Figure 17.

Calculate the increase in potential energy stored in the spring when the spring is extended from 0 cm to 8 cm.
Give your answer in joules (J).

(3)

energy = ... J

(ii) Calculate the spring constant of the spring using data from the graph in Figure 17.

State the unit.

(2)

spring constant = ... unit .....

(iii) The box in Figure 18 represents a weight added to the end of the spring.

Figure 18

Draw **two** vectors on Figure 18 to complete a free body force diagram of a 5 N weight in equilibrium.

(2)

(Total for question = 7 marks)

Q7.

Figure 8 shows some water in a tank.

Figure 8

(i) The bottom of the tank has an area of 0.80 m^2.

The force on the bottom of the tank, due to the water, is 2400 N.
Calculate the pressure, due to the water, on the bottom of the tank.

(3)

pressure = ... Pa

(ii) More water is added to the tank.

Explain how the pressure on the bottom of the tank changes when more water is added to the tank.

(2)

.....

.....

.....

.....

(iii) Figure 9 shows an object on the bottom of the tank of water.

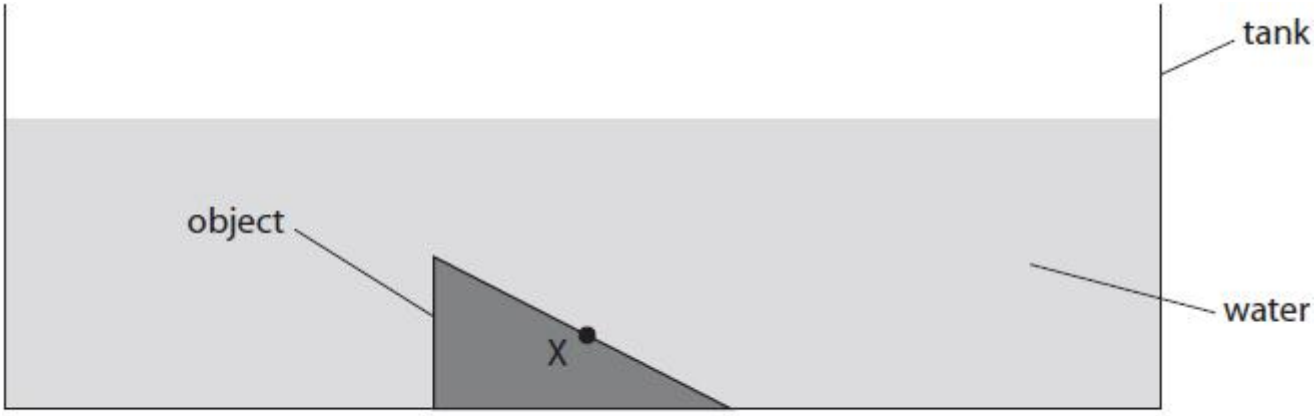

Figure 9

Draw an arrow on Figure 9 to show the direction of the force exerted by the water on the surface of the object at point X.

(1)

(Total for question = 6 marks)

Q8.

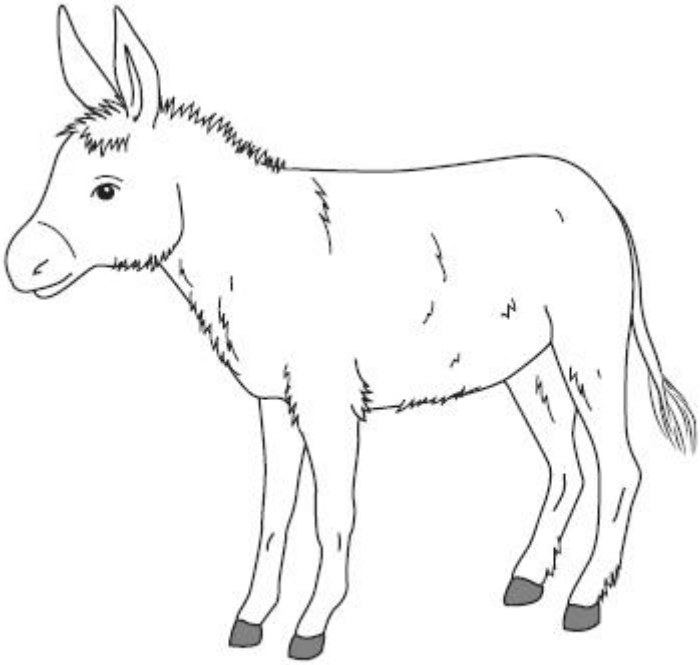

Figure 6

A donkey has a weight of 2500 N.

The area of each hoof is 0.022 m^2.

(i) Calculate the average pressure that the donkey exerts on the ground.
Use the equation

$$\text{pressure} = \frac{\text{force}}{\text{area}}$$

(2)

average pressure = ... Pa

(ii) Figure 7 shows how the shape of a camel's hoof is different from the shape of a donkey's hoof.

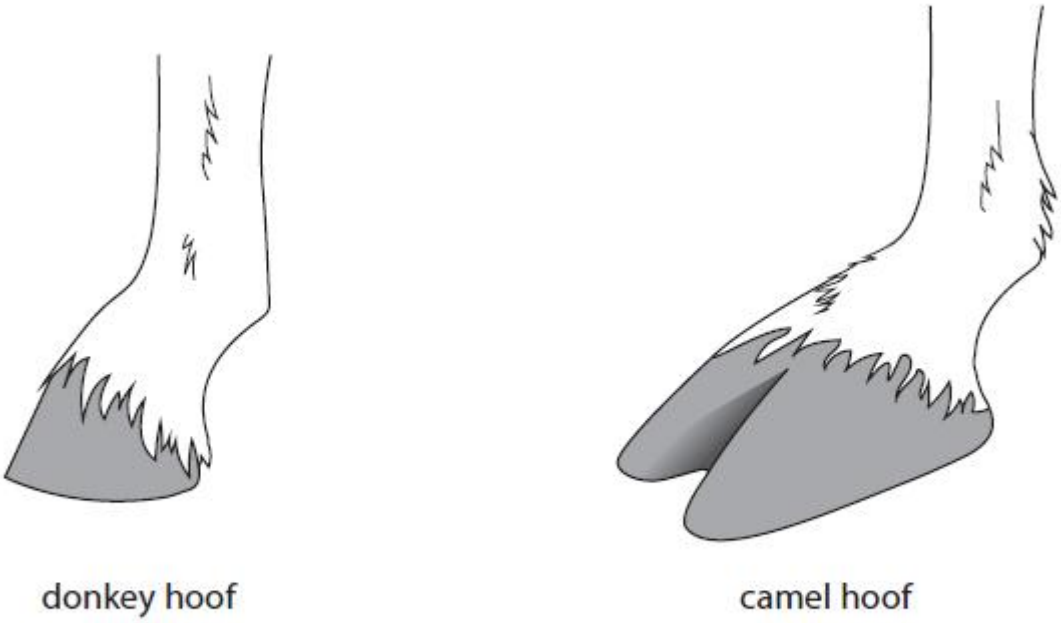

Both diagrams are drawn to the same scale.

Figure 7

The camel and the donkey have the same mass.

Explain how a camel's hoof is a more suitable shape than a donkey's hoof for walking on soft ground.

(2)

.....

.....

.....

(Total for question = 4 marks)

Q9.

Figure 1 shows a pool full of water.

(Source: © AnaKulagina/Shutterstock)

Figure 1

(i) The pressure on the ground due to the water in the pool is 3500 Pa.

The density of water is 10^3 kg/m^3.

The gravitational field strength, *g*, = 10 N/kg.

Calculate the depth of the water in the pool.

(2)

depth = ... m

(ii) Figure 2 shows part of the side and base of the pool.

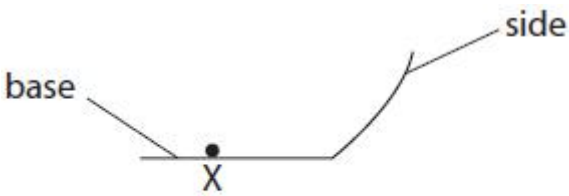

Figure 2

The water in the pool causes a force on the base of the pool.

Draw an arrow on Figure 2 to show the direction of this force at point X.

(1)

(Total for question = 3 marks)

Q10.

Another spring is extended.

The work done to extend the spring is 0.14 J.

The spring constant of the spring is 175 N/m.

Calculate the extension of the spring.

Use an equation selected from the list of equations at the end of this paper.

(3)

extension of spring = ... m

(Total for question = 3 marks)

Mark Scheme

Q1.

Question number	Answer	Additional guidance	Mark
(i)	(force of) gravity / weight (acts on spring)		(1) AO2

Question number	Answer	Additional guidance	Mark
(ii)	**A** Z-Y B is incorrect because it is a sum not a difference of the two lengths C is incorrect because that is the final length of the spring D is incorrect because that is the initial length of the spring		(1) AO1

Q2.

Question number	Answer	Additional guidance	Mark
(i)	50.0 to 55.0 (mm) inclusive		(1)

Question number	Answer	Additional guidance	Mark
(ii)	a description including note the original length (1) note the final length and subtract (1)		(2)

Question number	Answer	Additional guidance	Mark
(iii)	any two from: use a ruler with a smaller/millimetre divisions (1) use interim values of weight (1) add more weights (to increase the range) (1) move the ruler closer to the spring (1) use of pointer (1) repeat **and** average (1)	 ignore more accurate add fixed values of weights eye level / no parallax	**(2)**

Question number	Answer	Additional guidance	Mark
(iv)	the coils are {pushed together /touching} (1) or spring is fully compressed /cannot be made shorter (1)		**(1)**

Q3.

Question Number:	Answer	Additional Guidance	Mark
(i)	a description to include 4 of the following:		(4) AO 2 2
	• note position of pointer before current is switched on (1)	measure length of spring before current is switched on	
	• measure position of pointer when current in coil (1)		
	• (use an ammeter to) measure current (1)		
	• calculate the extension / stretch of the spring (1)	how far nail moves	
	• use force (of attraction) is proportional to extension / stretch (of spring) (1)	calculate force from spring constant and extension calibrate spring	
	• repeat with different currents (1)	increase the current calculate the extension of the spring using new position of pointer minus starting position of pointer is worth 3 marks	

Question Number:	Answer	Additional Guidance	Mark
(ii)	select and substitute (1) (E =) ½ x 24 x 0.12^2 evaluation (1) (E =) 0.17 (J)	 ½ x 24 x 12^2 max 1 mark accept answers that round down to 0.17 e.g. 0.1728 POT error (e.g. 1728) max 1 mark award full marks for correct answer without working	**(2)** AO 2 1

Q4.

Question number	Answer	Additional guidance	Mark
(i)	(80 000 – 23 000) 57 000 (Pa) (1)	 -57 000 (Pa)	**(1)** **AO2**

Question number	Answer	Additional guidance	Mark
(ii)	substitution (1) $80\ 000 = \frac{F}{0.094}$ rearrangement and evaluation (1) (F=) 7500 (N)	alternative method re-arrangement (1) (F =) P x A **or** (F=) 80 000 x 0.094 (substitution and) evaluation accept 7520 (N), award full marks for correct answer without working. allow 1 mark max for substitution using pressure of 57 000 **or** an answer that rounds to 5400 e.g. 5358 (calculated net force)	**(2)** **AO2**

Question number	Answer	Additional guidance	Mark
(iii)	force is less (on small window) (1) pressure is the same (1)	force is greater on large window	**(2)** **AO1**

Question number	Answer	Additional guidance	Mark
(iv)	arrow pointing towards outside of aeroplane (1) arrow is normal to surface at X (judge by eye) (1) Examples: 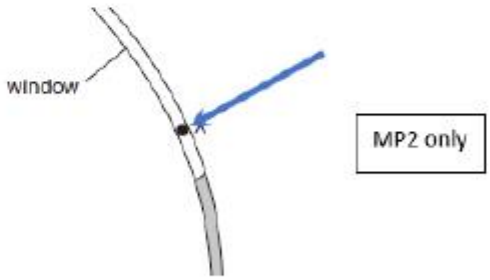 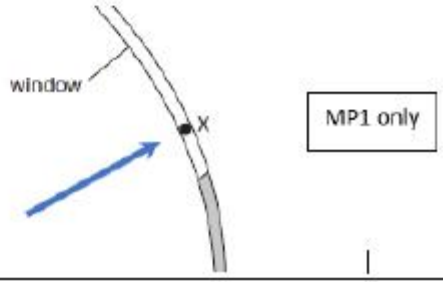 	may be inside or outside of aeroplane. need not touch X do not award if two or more conflicting arrows drawn must touch X or dot at X independent marks	**(2)** **AO1**

Q5.

Question Number	Answer	Additional guidance	Mark
(i)	recall (1) (P =) $\frac{F}{A}$ re-arrangement and evaluation (1) A = 0.62 (m^2)	accept for recall $66\ 000 = \frac{41\ 000}{A}$ or $A = \frac{41\ 000}{66\ 000}$ allow values that round to 0.62 e.g. 0.621 award full marks for the correct answer without working	(2)

Question Number	Answer	Additional guidance	Mark
(ii)	substitution into $P = h \times \rho \times g$ (1) 66000 = h x 1000 x 10 re-arrangement and evaluation (1) (h =) 6.6 (m)	award substitution mark if it is clear that all values have been substituted $(h = \frac{66\ 000}{1\ 000 \times 10})$ award full marks for the correct answer without working	(2)

Question Number	Answer	Additional guidance	Mark
(iii)	An explanation linking the pressure at the bottom of the block is greater than the pressure at the top of the block (for the same area) (1) the force on the bottom is greater than the force on the top (1)	accept in terms of weight of fluid displaced the block displaces some water weight of water displaced is less than weight of (same volume) of concrete **or** water is less dense than concrete allow the upthrust (of water) is equal to the weight of the water displaced for **2** marks	**(2)**

Question Number	Answer	Mark
(iv)	Answers will be credited according to candidate's deployment of knowledge and understanding of the material in relation to the qualities and skills outlined in the generic mark scheme. The indicative content below is not prescriptive and candidates are not required to include all the material which is indicated as relevant. Additional content included in the response must be scientific and relevant. **Between 0 and 120 seconds** • the (apparent) weight of the block is less than in air (AO2) • force in the cable is less (than weight of block) (AO3) • force remains constant because upthrust is constant (AO3) • upthrust is constant because submerged volume of block is constant (AO3) • upthrust = (17.0 – 10.2) = 6.8 kN (AO3) • lifting speed = (distance for top to reach surface / time to start to emerge) = 6.6 /120 = 0.055 m/s **Between 120 and 140 seconds** • block is emerging from water (AO3) • less volume of the block remaining submerged (AO2) • upthrust is reducing (AO3) • force in the cable is increasing (AO2) • it takes 20 seconds to fully emerge from water (AO3) • height of block = lifting speed x time for top emerge = 0.055 x 20 = 1.1 m (AO3)	(6)
	140 seconds onwards • block is clear of the water (AO3) • no upthrust (from water) on the block (AO2) • force in cable is equal to weight of block (AO2) • force is constant because weight is constant (AO2) • mass of block = weight in air / 10 = 17000 / 10 = 1700 kg (AO3) • height of lorry = lifting speed x time to reach end of lift = = 0.055 x 30 s = 1.7 m (AO3) **At all times** • (speed is constant) so no force required to accelerate the block (AO2) • so force is resultant of weight and upthrust (AO2) **Other calculations are possible, eg:** • Volume of block = height x area = 1.1 x 0.62 = 0.68 m^3 • Density of block = 1700 / 0.68= 2500 kg/m^3	

Descriptor
• No awardable content
• Interpretation and evaluation of the information attempted but will be limited with a focus on mainly just one variable. Demonstrates limited synthesis of understanding. (AO3) • The explanation attempts to link and apply knowledge and understanding of scientific ideas, flawed or simplistic connections made between elements in the context of the question. (AO2)
• Interpretation and evaluation of the information on both variables, synthesising mostly relevant understanding. (AO3) • The explanation is mostly supported through linkage and application of knowledge and understanding of scientific ideas, some logical connections made between elements in the context of the question. (AO2)
• Interpretation and evaluation of the information, demonstrating throughout the skills of synthesising relevant understanding. (AO3) • The explanation is supported throughout by linkage and application of knowledge and understanding of scientific ideas, logical connections made between elements in the context of the question. (AO2)

Summary for guidance			
Level	**Mark**	**Additional Guidance**	**General additional guidance – the decision within levels** e.g. - At each level, as well as content, the scientific coherency of what is stated will help place the answer at the top, or the bottom, of that level.
	0	No rewardable material.	
Level 1	1–2	Additional guidance Isolated facts with limited quantitative work e.g. identifies the change in lifting force and gives a reason why it changes.	Possible candidate responses The lifting force increases because the block is being lifted out of the water
Level 2	3–4	Additional guidance Limited explanation that includes extracting data (from either one section of the graph or elsewhere in the question) to provide a reason why the force changes	Possible candidate responses Between 120 and 140s the lifting force increases. This is because the block is being lifted out of the water and there is less upthrust.
Level 3	5–6	Additional guidance Detailed explanation that includes calculation(s) relevant to one section of the graph and correct explanation relevant to the middle section and one other section.	Possible candidate responses When underwater, the lifting force is smaller because of upthrust from the water. The upthrust = 17-10.2 = 6.8 kN The lifting force increases after 120s because it is being lifted out of the water and the upthrust is getting smaller.

Q6.

Question number	Answer	Additional guidance	Mark
(i)	relevant values from graph(1) 8 ($\times 10^{-2}$) and 3.6 seen substitution (1) (energy =) 0.5 x 3.6 x 8 ($\times 10^{-2}$) evaluation (1) (energy =) 0.14 (J)	 accept 8 ($\times 10^{-2}$) and values between 3.6 and 3.7 accept value between 0.14 and 0.15 (J) values between 0.14 and 0.15 (J) to any other power of ten scores 2 marks values between 0.28 and 0.30 (J) scores 2 marks values between 0.28 and 0.30 (J) to any other power of ten scores 1 mark award full marks for correct answer without working	**(3)** **AO2**

Question number	Answer	Additional guidance	Mark
(ii)	45 or 0.45 (1) **OR** 45 N/m or 0.45 N/cm (2)	allow values between 44 and 47 or between 0.44 and 0.47 allow full marks for values between 44 and 47 N/m or between 0.44 and 0.47 N/cm	**(2)** **AO2**

Question number	Answer	Additional guidance	Mark
(iii)	two straight vertical arrows in opposite directions and (if extended) go through centre of the box (judge by eye) (1) label 5N on both arrows (1)	examples 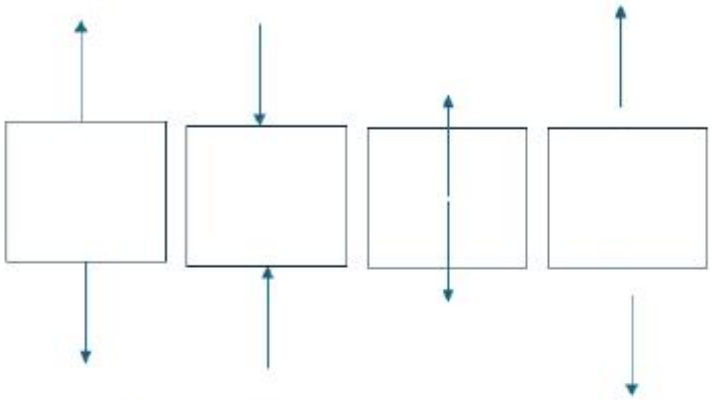 scores this mark 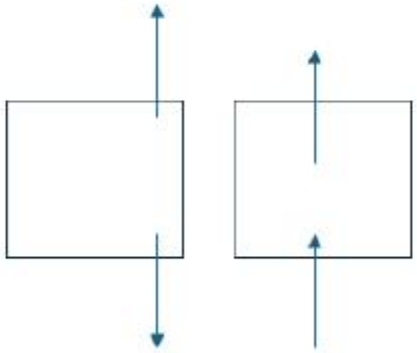 does not score this mark independent mark	**(2)** **AO1**

Q7.

Question number	Answer	Additional guidance	Mark
i	recall (1) $P = \frac{F}{A}$ substitution (1) (p) $= \frac{2400}{0.8}$ evaluation (P) = 3000 (Pa) (1)	may be implied by a correct substitution award full marks for the correct answer without working	**(3)** **AO2**

Question number	Answer	Additional guidance	Mark
ii	an explanation linking greater pressure (on bottom of tank) (1) with greater force **due to water** (above bottom of tank) (1)	 more weight of water more depth/height of water ignore simply 'more water' or 'greater amount of water'	**(2)** **AO1**

Question number	Answer	Additional guidance	Mark
iii	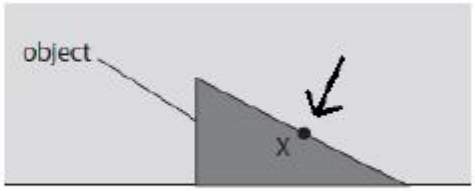 an arrow perpendicular to the sloping side **and** pointing towards X	judge by eye	**(1)** **AO1**

Q8.

Question number	Answer	Additional guidance	Mark
(i)	substitution (1) (pressure =) $\frac{2500}{4 \times 0.022}$ evaluation (1) 28 000 (Pa)	 any number rounding to 28 000 e.g. 28 400, 28 410, 28 409 award full marks for the correct answer without working award **one** mark for numbers that round to 110 000 (Pa) (missing 4 in denominator) award 1 mark for 454 545 (times by 4)	**(2)** **AO2.1**

Question number	Answer	Additional guidance	Mark
(ii)	An explanation linking any **two** from camel is less likely to sink into the soft ground (1) (same) force / weight is distributed / spread out (1) camel's hoof has greater (surface) area (than donkey) (1) camel's hoof exerts less pressure (than it would if hoof were smaller) (1)	ORA for donkey ignore pressure is spread out wider if no other marks scored then allow 1 mark for split in camel hoof enables better grip (as it walks)	**(2)** **AO3.1**

Q9.

Question number	Answer	Additional guidance	Mark
(i)	substitution into $P = h \times \rho \times g$ (1) $3500 = h \times 10^3 \times 10$ rearrangement and evaluation (1) (h =) 0.35 (m) **OR ALTERNATIVE METHOD** rearrangement (1) $h = \frac{P}{\rho \times g}$ substitution and evaluation (1) (h =) 0.35 (m)	 35 cm 35 cm accept 35 (m) for 1 mark award full marks for correct answer without working	**(2)** **AO2.1**

Question number	Answer	Additional guidance	Mark
(ii)	A straight, vertical, downwards arrow as shown 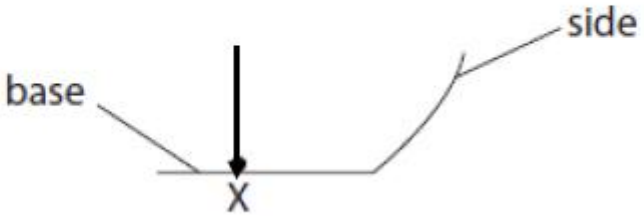 	Judge by eye. Arrow tip or tail (extended if necessary) must pass through point X.	**(1)** **AO1.1**

Q10.

Question number	Answer	Additional guidance	Mark
	substitution (1) $0.14 = \frac{1}{2} \times 175 \times x^2$ rearrangement for x^2 (1) $(x^2 =)\ \frac{0.14 \times 2}{175}$ or $\frac{0.14}{0.5 \times 175}$ evaluation (1) 0.04 (m)	substitution and rearrangement in either order $x^2 = \frac{E}{\frac{1}{2} \times k}$ 1.6×10^{-3} seen gains 2 marks 0.02(m) gains 2 marks 0.028 gains 1 mark award full marks for the correct answer without working	**(3)**