Questions

Q1.

Answer the question with a cross in the box you think is correct ☒. If you change your mind about an answer, put a line through the box ☒ and then mark your new answer with a cross ☒.

Figure 6 shows four forces, P, Q, R and S, acting on a rod.

The rod can rotate around an axle.

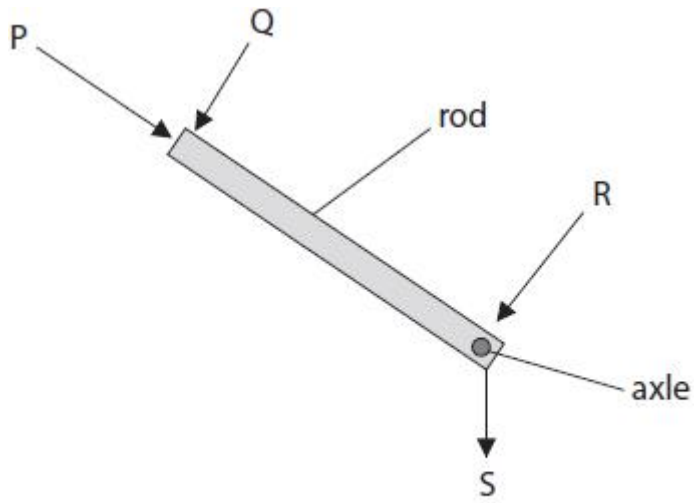

Figure 6

Which force will make the rod rotate about the axle?

(1)

☐ **A** P
☐ **B** Q
☐ **C** R
☐ **D** S

(Total for question = 1 mark)

Q2.

Answer the question with a cross in the box you think is correct ☒. If you change your mind about an answer, put a line through the box ☒ and then mark your new answer with a cross ☒.

Figure 18 shows a different spring hanging from a hook fixed to the ceiling.

A block hangs from the other end of the spring.

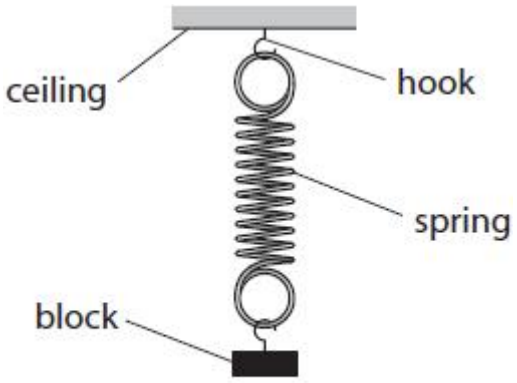

Figure 18

The weight of the spring is 1 N.
The weight of the block is 5 N.

The force exerted on the top of the spring by the hook is

(1)

- ☐ **A** 4 N down
- ☐ **B** 4 N up
- ☐ **C** 6 N down
- ☐ **D** 6 N up

(Total for question = 1 mark)

Q3.

Answer the question with a cross in the box you think is correct ☒. If you change your mind about an answer, put a line through the box ☒ and then mark your new answer with a cross ☒.

The magnitude and direction of a force can be represented by a vector.
Figure 22 shows the forces acting on four identical trolleys. The arrows show the magnitude and direction of the forces.

Which diagram shows a pair of forces that will produce zero acceleration?

(1)

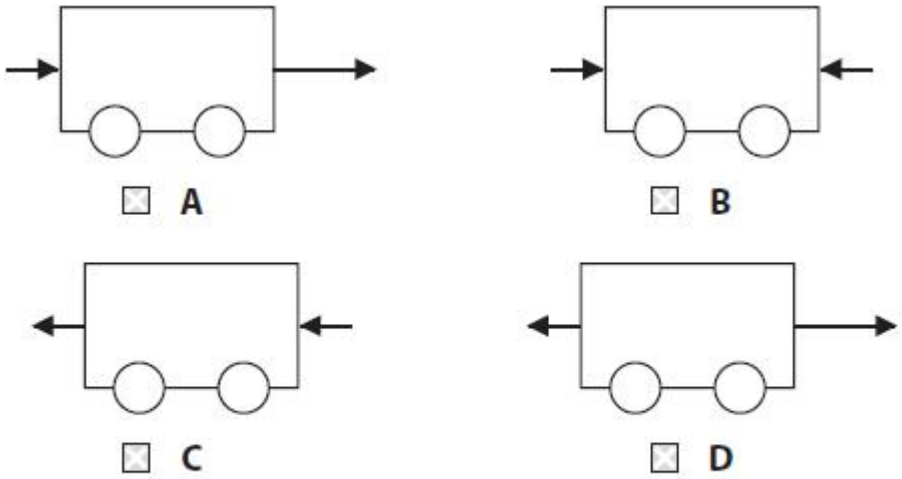

Figure 22

(Total for question = 1 mark)

Q4.

In which of the following situations is a non-zero resultant force acting?

(1)

- ☒ **A** a book rests on a table
- ☒ **B** a car travels along a road at a constant speed
- ☒ **C** a javelin moves through the air after leaving an athlete's hand
- ☒ **D** a steel ball bearing descends through some car oil at a constant velocity

(Total for question = 1 mark)

Q5.

Figure 6 shows a book resting on a table with some forces involved.

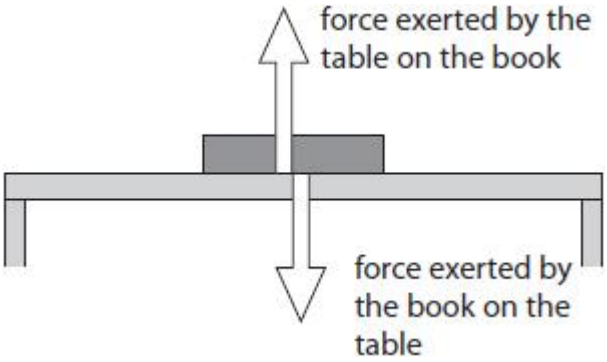

Figure 6

State why this diagram is **NOT** a free body force diagram.

(1)

.....

.....

(Total for question = 1 mark)

Q6.

Explain how unwanted energy transfers may be reduced in mechanical systems.

(2)

.....

.....

.....

.....

(Total for question = 2 marks)

Q7.

Answer the question with a cross in the box you think is correct ☒ . If you change your mind about an answer, put a line through the box ☒ and then mark your new answer with a cross ☒ .

Two cyclists ride on a hilly road and go through points P, Q, R and S.

The diagram in Figure 16 shows how the vertical height of the road changes during the journey from P to S.

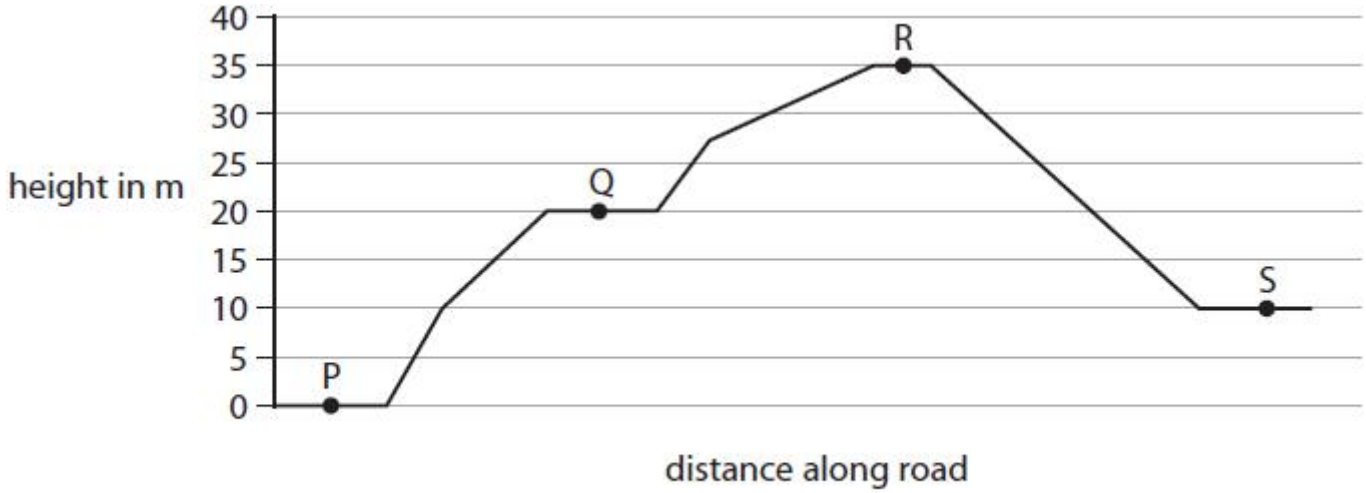

Figure 16

(i) The greatest overall change in gravitational potential energy for each cyclist is between which two points on the journey?

(1)

- ☒ **A** P and Q
- ☒ **B** Q and R
- ☒ **C** P and S
- ☒ **D** R and S

(ii) The total weight of one cyclist and bicycle is 700 N.

Calculate the total amount of work done against gravity when the cyclist travels from point P to point Q in the journey.

(2)

work done = ... J

(iii) The gravitational potential energy of the other cyclist changes by 11 250 J when travelling from point Q to point R.

Calculate the mass of this cyclist.
Gravitational field strength = 10 N / kg
Use the equation

$$\Delta GPE = m \times g \times \Delta h$$

(2)

mass = ... kg

(iv) Explain why the total amount of work done by a cyclist between points Q and R is different from the change in gravitational potential energy of the cyclist between points Q and R.

(2)

.....

.....

.....

.....

(v) The cyclists lubricated the chains and the wheel bearings of their bicycles before setting off.

Lubricating the chains and wheel bearings helps to

(1)

- ☒ **A** decrease the amount of work done against gravity
- ☒ **B** decrease the efficiency of the cyclist and bicycle
- ☒ **C** increase the efficiency of the cyclist and bicycle
- ☒ **D** increase the overall amount of energy transferred by the cyclist

(Total for question = 8 marks)

Q8.

A firework rocket contains a solid fuel inside a cardboard tube.

The burning of the fuel creates a thrust to propel the rocket upwards.

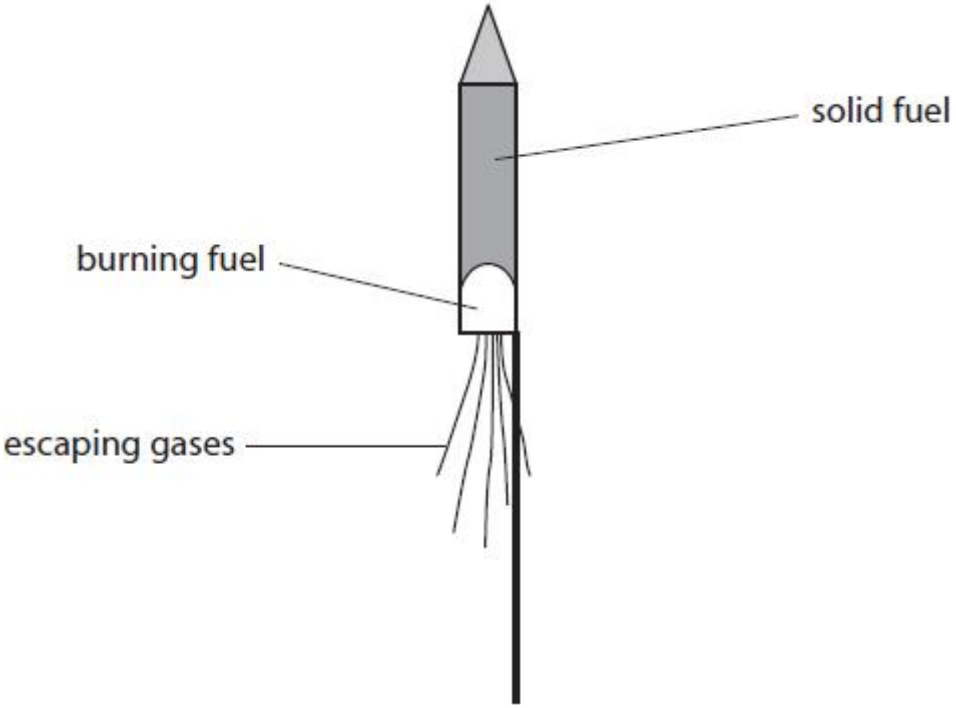

(i) Scientists can refer to several different quantities when describing the motion of the rocket.

mass	energy	speed	force

Only one of these quantities is a vector.
Complete this sentence using **one** of the words from the box.

(1)

The vector quantity is .....

(ii) Before the fuse is lit, the total weight of a rocket including fuel is 0.7N.

The gravitational field strength is 10 N/kg.
Complete the sentence by putting a cross (☒) in the box next to your answer.
The total mass of the rocket including fuel is

(1)

☐ **A** 0.007 kg

☐ **B** 0.07 kg

☐ **C** 0.7 kg

☐ **D** 7 kg

(iii) There is a resultant force on the rocket of 0.5 N upwards when it takes off.

The arrow on the diagram shows the size and direction of the force of gravity acting on the rocket when it takes off.

Add another arrow to the diagram to show the thrust produced by the burning fuel at the time the rocket takes off.
You should label the arrow with the size of the thrust.

(2)

Q9.

(i) Figure 14 shows the vertical forces on an aeroplane.

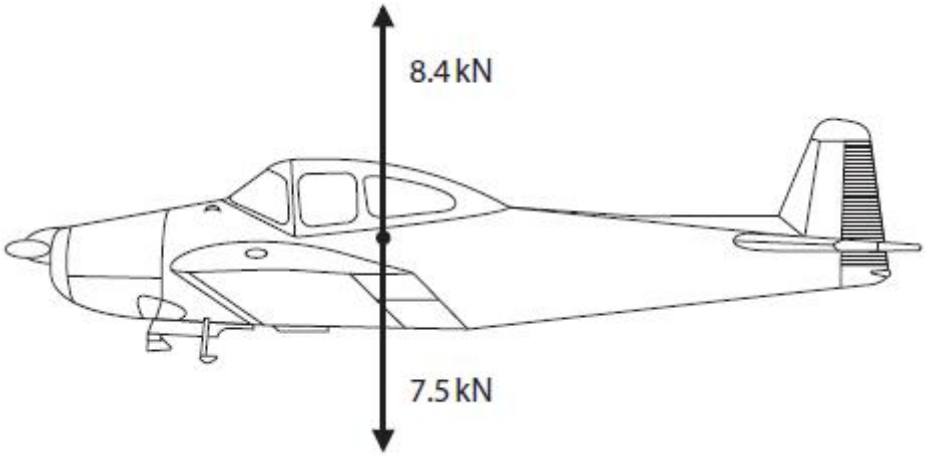

Figure 14

Use information from the diagram to determine the size and direction of the resultant vertical force on the aeroplane.

(2)

size = ... kN, direction is .....

(ii) The aeroplane is descending.

Figure 15 shows a diagram of the resultant vertical and horizontal forces on the aeroplane as it is descending.

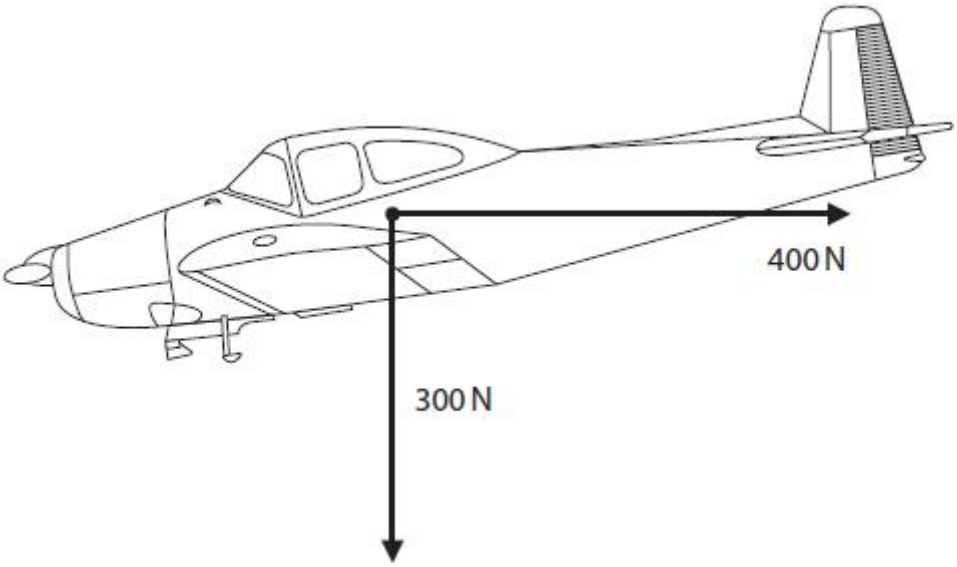

Figure 15

Complete the diagram to show the resultant of these two forces.

(1)

(iii) The mass of the aeroplane is 750 kg.

Calculate the change in gravitational potential energy of the aeroplane as it descends from 1300 m to the ground.
Gravitational field strength (g) = 10 N/kg

(2)

energy = ... J

(Total for question = 5 marks)

Q10.

A student places a trolley at the top of a runway, as shown in Figure 3.

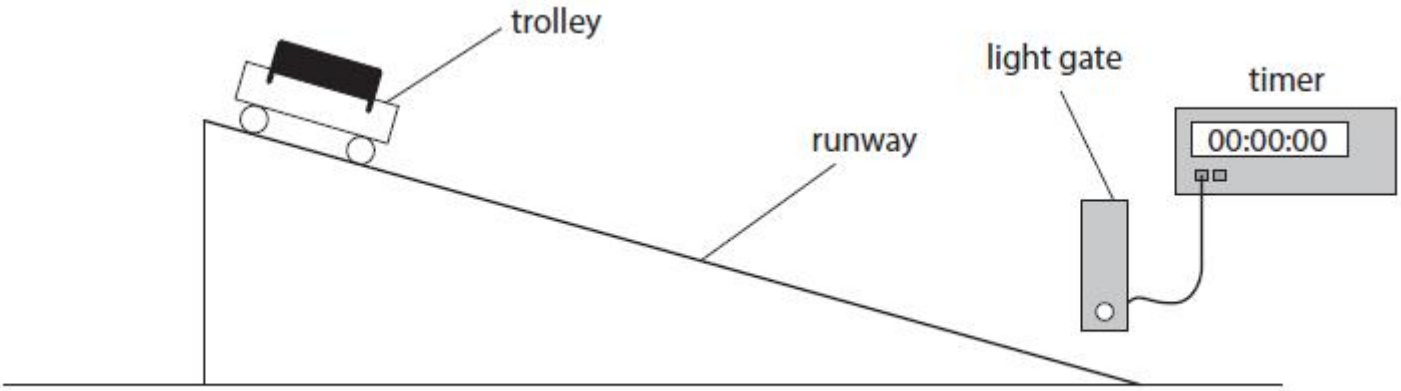

Figure 3

The student had to lift the trolley through a height of 26 cm to put it at the top of the runway.

The gravitational potential energy, ΔGPE, of the trolley increases by 4.1 J when lifted to the top of the runway.

The gravitational field strength, g, = 10 N/kg.

(i) Show that the mass of the trolley is about 1.6 kg.

Use the equation

$$m = \frac{\Delta GPE}{g \times \Delta h}$$

(2)

(ii) The student releases the trolley and the trolley moves down the runway.

The student assumes that all the extra gravitational potential energy, ΔGPE, stored at the top of the runway is transferred to kinetic energy at the end of the runway.
Calculate the expected value of the velocity of the trolley at the end of the runway.
Use the equation

$$v^2 = \frac{2 \times \Delta GPE}{m}$$

(3)

expected velocity = ... m/s

(iii) The light gate, shown in Figure 3, is used to determine the actual velocity of the trolley at the end of the runway.

The actual velocity at the end of the runway is less than the expected velocity as calculated in (ii).
Suggest **one** way to reduce the difference between the actual velocity and the expected velocity.

(1)

.....

.....

(Total for question = 6 marks)

Mark Scheme

Q1.

Question Number	Answer	Mark
	The only correct answer is B: force Q **A is incorrect** because the moment of force P about the axle is zero. **C is incorrect** because moment of force R about the axle is zero. **D is incorrect** because moment of force S about the axle is zero.	**(1)**

Q2.

Question number	Answer	Additional guidance	Mark
	D 6 N up A and C are incorrect because the force is upwards B is incorrect because the force is the sum of the two weights given.		**(1)** **AO3**

Q3.

Question number	Answer	Mark
	B 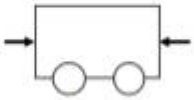 A, C and D are incorrect because they all show a resultant force which would cause the trolley to accelerate	**(1)**

Q4.

Question number	Answer	Mark
	C a javelin moves through the air after leaving an athlete's hand	(1)

Q5.

Question number	Answer	Mark
	An explanation identifying the fact that the forces shown are acting on two different bodies / they are not acting on the same body (1)	(1)

Q6.

Question number	Answer	Mark
	An answer that combines points of interpretation/evaluation to provide a logical description: Use of lubrication / oil (1) To reduce friction (between parts) (1)	(2)

Q7.

Question number	Answer	Additional guidance	Mark
(i)	D R and S A, B and C are incorrect because the difference in vertical positions are all less than that shown by R and S		(1) AO1

Question number	Answer	Additional guidance	Mark
(ii)	recall (1) work done = force x distance substitution and evaluation (1) (work done =) 14,000 (J)	(work done) = 700 x 20 award full marks for the correct answer without working	**(2)** **AO1**

Question number	Answer	Additional guidance	Mark
(iii)	substitution (1) 11250 = m x 10 x 15 rearrangement and evaluation (1) (mass=) 75 (kg)	award full marks for the correct answer without working. if no other marks scored then award 1 mark for answers of 0.013 (substitution mark using h = 15)	**(2)** **AO2**

Question number	Answer	Additional guidance	Mark
(iv)	An explanation linking some work is done to overcome friction/air resistance (1) energy is dissipated /transferred to the environment (1)	allow energy is lost thermal energy	**(2)** **AO1**

Question number	Answer	Additional guidance	Mark
(v)	C increase the efficiency of the cyclist and bicycle A is incorrect because lubrication has no effect on work done against gravity B is incorrect because lubrication will increase efficiency D is incorrect because the overall energy transfer will not increase		**(1)** **AO1**

Q8.

Question Number	Answer	Acceptable answers	Mark
(i)	force (1)	If than one word given then 0 marks.	**(1)**

Question Number	Answer	Acceptable answers	Mark
(ii)	B 0.07kg		**(1)**

Question Number	Answer	Acceptable answers	Mark
(iii)	Arrow pointing (vertically) upwards (1) Value of 1.2 (N) (written near to arrow) (1)	Marks are independent of each other	**(2)**

Q9.

Question Number:	Answer	Additional guidance	Mark
(i)	0.9 (k N) (1) up / upwards / ascending (1)	accept .9 or 0.90 north N ↑	(2) AO 3 2a AO 3 2b

Question Number:	Answer	Additional guidance	Mark
(ii)	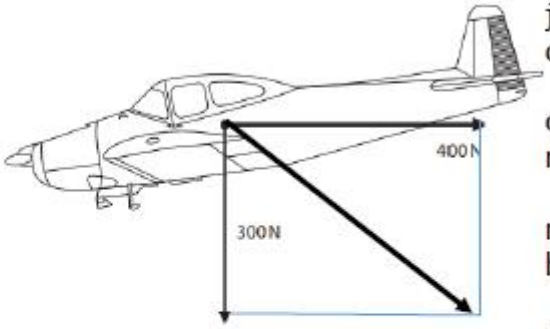	judge length and direction by eye construction lines need not be shown magnitude need not be stated allow missing arrowhead if direction and length are correct reject answers which have any additional vectors drawn	(1) AO 3 2b

Question Number:	Answer	Additional Guidance	Mark
(iii)	recall and substitution (1) GPE = 750 x 10 x 1300 evaluation (1) (energy =) 9 800 000 (J)	 no POT error (could have missed out g) allow answers in standard form 9.8×10^6 allow answers that round to 9 800 000 e.g. 9 750 000 J allow 9800 kJ or 9.8MJ allow 9 555 000 J allow negative values award full marks for correct answer without working	**(2)** AO 2 1

Q10.

Question Number	Answer	Additional guidance	Mark
(i)	substitution with conversion (2) (m =) $\frac{4.1}{10 \times 0.26}$ (=1.58)	accept 9.8(1) instead of 10 for g throughout alternative method substitution and rearrangement with conversion (2) e.g. Δgpe = 10 x 0.26 x 1.6 (=4.1) Allow for 1 mark: (m =) $\frac{4.1}{10 \times 26}$ allow 26 to any power of 10 for this mark OR Δgpe = 10 x 26 x 1.6 allow 26 to any power of 10 for this mark OR height converted to m 0.26 (m) or 26 x 10^{-2} (m)	**(2)** **AO 2.1**

Question Number	Answer	Additional guidance	Mark
(ii)	substitution (1) $(v^2=)\ \frac{2 \times 4.1}{1.6}$ evaluation of v^2 (1) 5.1(25) evaluation of v (1) 2.3 (m/s)	ecf from part a(i) throughout accept use of 1.58 accept 5.2 (use of 1.58) accept values that round to 2.3 e.g. 2.264 award full marks for the correct answer without working	**(3)** **AO2.1**

Question Number	Answer	Additional guidance	Mark
(iii)	addition of any lubricant / oil / grease	make runway steep(er) use an air track instead streamline trolley	**(1)** **AO 3.3b**