Questions

Q1.

Some questions must be answered with a cross in a box (☒). If you change your mind about an answer, put a line through the box (☒) and then mark your new answer with a cross (☒).

Which of these is a vector quantity?

(1)

- ☐ **A** acceleration
- ☐ **B** speed
- ☐ **C** time
- ☐ **D** distance

(Total for question = 1 mark)

Q2.

Figure 24 shows a submarine underwater.

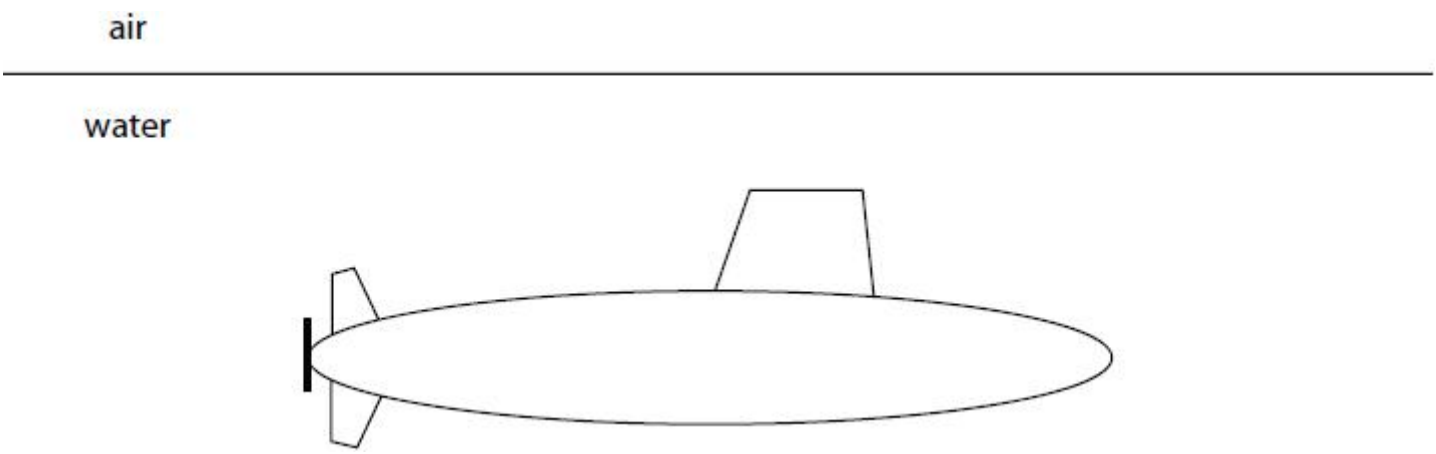

Figure 24

The motor in the submarine turns the gear wheels shown in Figure 25.

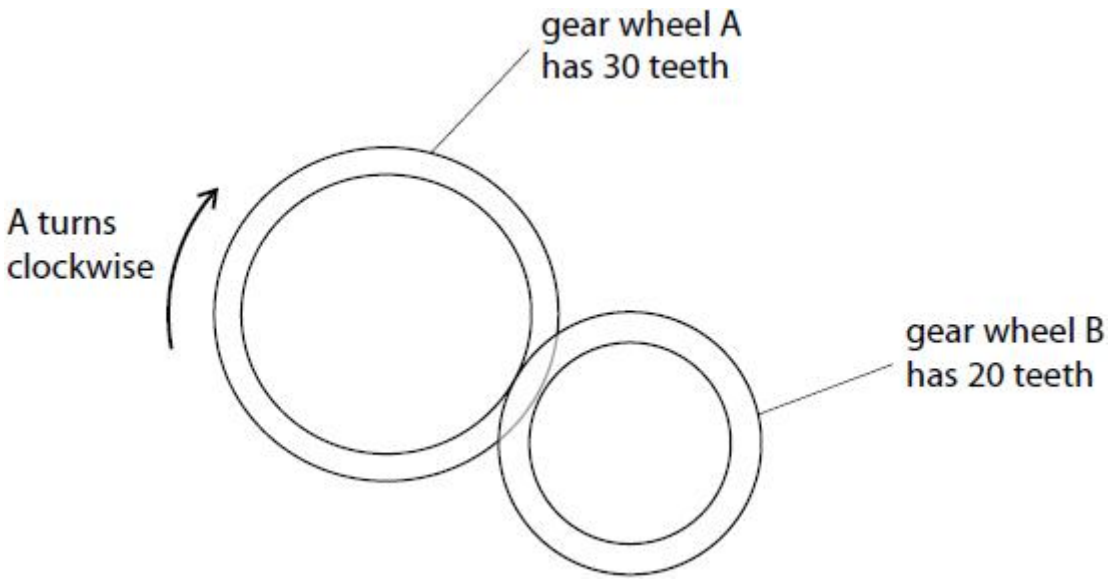

Figure 25

Gear wheel A rotates clockwise through one complete turn.

Which of these is correct for gear wheel B?

(1)

	amount that gear wheel B rotates	direction gear wheel B rotates
☐ **A**	1½ turns	clockwise
☐ **B**	1½ turns	anticlockwise
☐ **C**	⅔ of a turn	clockwise
☐ **D**	⅔ of a turn	anticlockwise

(Total for question = 1 mark)

Q3.

Figure 10 shows an arrangement of gears.

Each gear turns around a fixed axle.

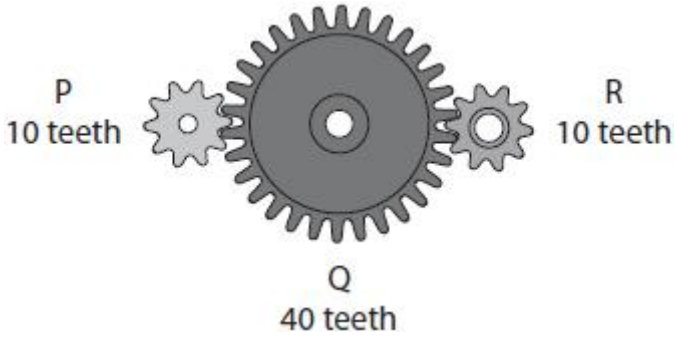

Figure 10

Gear P is turned through one complete revolution per second.

(i) Which of the following describes the motion of gear R?

(1)

	speed (revolutions per second)	direction of rotation
☐ **A**	4	same as P
☐ **B**	1	same as P
☐ **C**	4	opposite to P
☐ **D**	1	opposite to P

(ii) Figure 11 shows the same arrangement with gear R replaced by a rack.

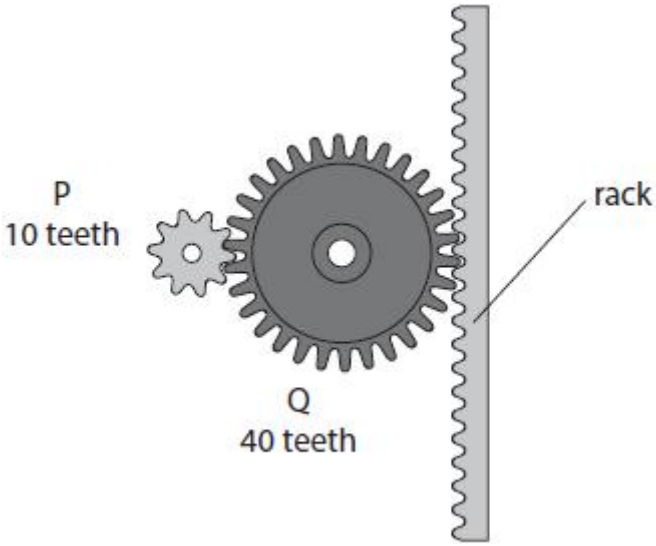

Figure 11

The rack can move up or down when the gears turn.

The teeth on the rack are 2 mm apart.

Calculate how far the rack moves when P turns through to one complete revolution.

(2)

distance = ... mm

(Total for question = 3 marks)

Q4.

A student investigates moments of forces.

Figure 14 shows the apparatus used.

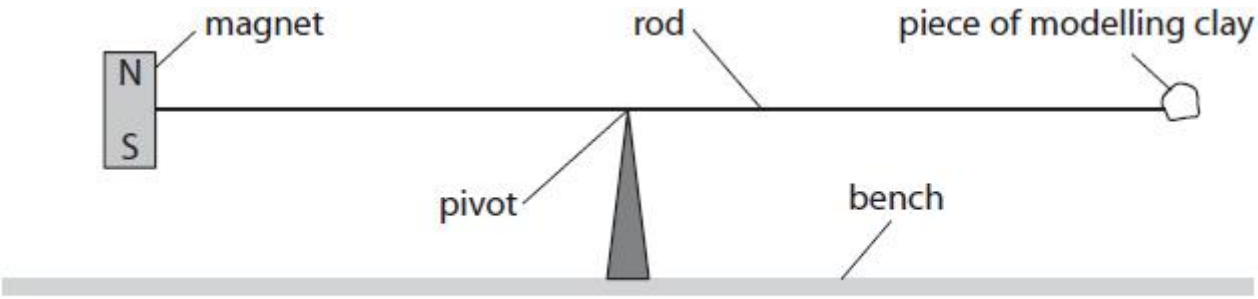

Figure 14

The pivot is under the centre of the rod.

A magnet is fixed to one end of the rod.

A piece of modelling clay is fixed to the other end of the rod.

The system is in equilibrium.

State the relationship between the moment of the weight of the magnet and the moment of the weight of the piece of modelling clay about the pivot.

(1)

.....

.....

(Total for question = 1 mark)

Q5.

Figure 8 shows a box sliding down a slope in the direction shown.

(3)

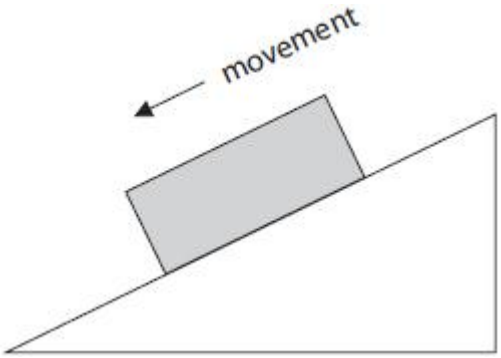

Figure 8

Draw two vector arrows on this diagram showing the 'normal contact force' and 'friction' acting on the box. Label these two forces.

(Total for question = 3 marks)

Q6.

The diagram shows the forces acting on a car which is travelling along a flat straight road.

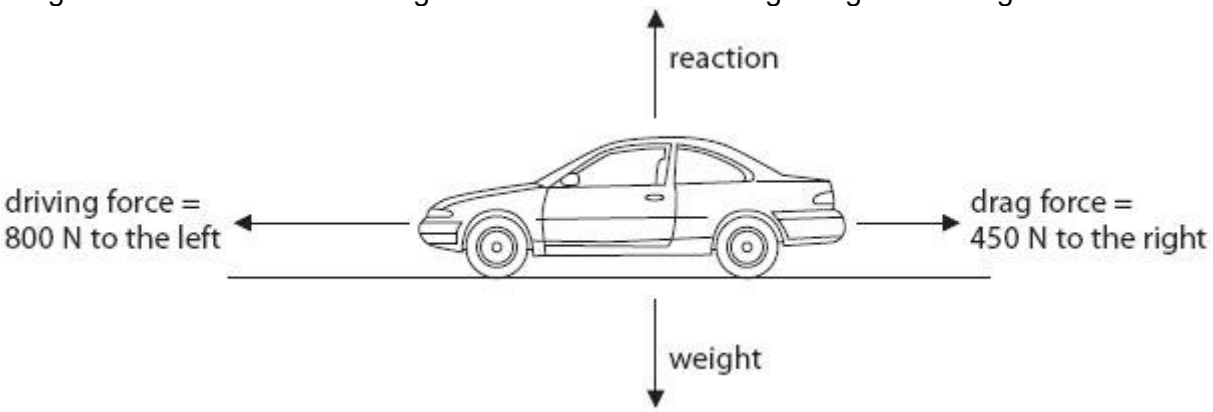

(a) (i) The size of the resultant force on the car is 350 N.
In which direction is the resultant force acting?
Put a cross (■) in the box next to your answer.

(1)

☒ **A** down ↓

☒ **B** to the left ←

☒ **C** to the right →

☒ **D** up ↑

(ii) Complete the sentence by putting a cross (■) in the box next to your answer.

The car is

(1)

☒ **A** accelerating

☒ **B** decelerating

☒ **C** moving at a constant speed

☒ **D** not moving

(2)

(iii) The mass of the car is 625 kg.
Calculate the weight of the car.
gravitational field strength = 10N/kg

(2)

.....

(b) Forces also act on objects when they fall through the air.
There are two forces acting on this ball as it falls through the air.
The weight is shown on the diagram.

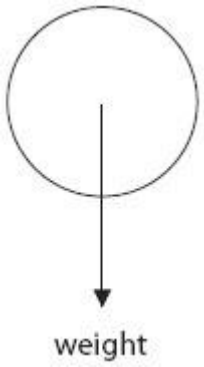

(i) Draw and label an arrow on the diagram to show the other force acting on the ball.

(2)

(ii) Use words from the box to complete the sentences.

(2)

balanced	changing	greater	smaller	zero

After a short time the ball falls at a steady speed.

The forces acting on the ball are now .....

The acceleration of the ball is now .....

(Total for Question is 8 marks)

Q7.

A student investigates the relationship between the magnetic flux density and the electromagnetic force on a current-carrying wire.

The student has the equipment shown in Figure 19.

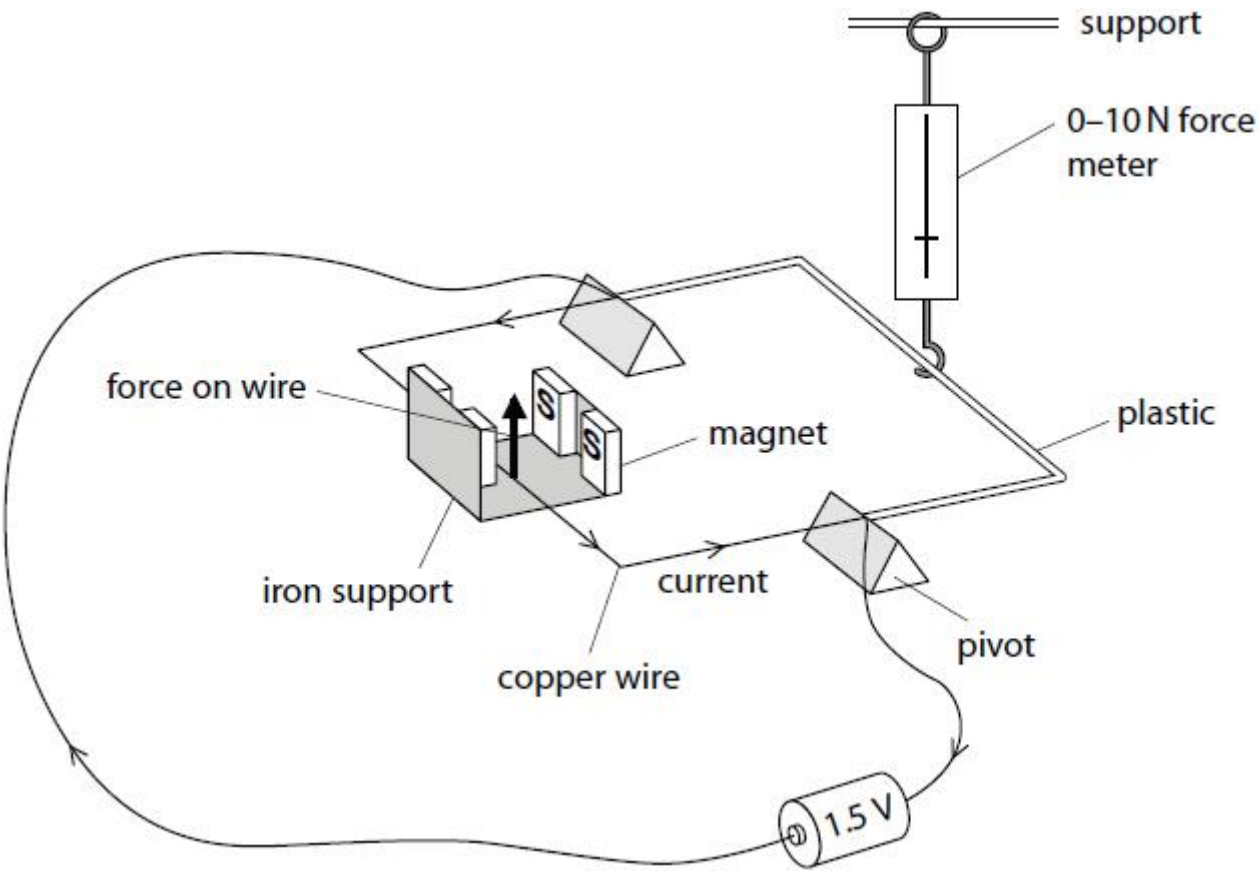

Figure 19

The student varies the number of magnets and measures the force on the wire using the force meter.

The results are shown in Figure 20.

number of pairs of magnets	reading on force meter (N)
1	0.0
2	0.0
3	0.1

Figure 20

The student decides that his equipment is not sufficiently sensitive.

Give **three** ways the student should develop his investigation to improve the quality of his results.

(3)

1 .....

.....

2 .....

.....

3 .....

.....

(Total for question = 3 marks)

Q8.

Answer the question with a cross in the box you think is correct ☒. If you change your mind about an answer, put a line through the box ☒ and then mark your new answer with a cross ☒.

Figure 1 shows some forces acting on a seesaw.

The forces shown have the same magnitude but act in different directions.

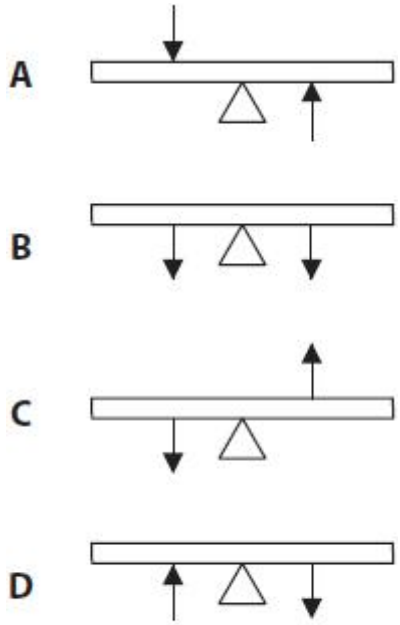

Figure 1

In which of these could the forces acting on a seesaw be in equilibrium?

(1)

☐ **A**
☐ **B**
☐ **C**
☐ **D**

(Total for question = 1 mark)

Q9.

Answer the question with a cross in the box you think is correct ☒. If you change your mind about an answer, put a line through the box ☒ and then mark your new answer with a cross ☒.

Figure 11 shows a person doing a push-up exercise.

Figure 11

An upward force is used to cause rotation about a pivot.

Which row of the table is correct for this rotation?

(1)

		provide the upward force	act as a pivot
☐	**A**	arms	hands
☐	**B**	arms	feet
☐	**C**	legs	hands
☐	**D**	legs	feet

(Total for question = 1 mark)

Mark Scheme

Q1.

Question number	Answer	Mark
	☒ **A** acceleration This is the only vector quantity from the options given	**(1)** **AO1.1**

Q2.

Question number	Answer	Mark
	B	**(1)**

Q3.

Question number	Answer	Mark
(i)	B 1 same as P **The only correct answer is B** ***A*** *is incorrect because the number of teeth on P and R are equal* ***C*** *is incorrect because Q reverses the rotation of P and then R reverses the rotation of Q* ***D*** *is incorrect because Q reverses the rotation of P and then R reverses the rotation of Q*	**(1)** AO 1 1

Question Number:	Answer	Additional Guidance	Mark
(ii)	use of distance = pitch x number of teeth (moved) (1) evaluation (1) (distance =) 20 (mm)	allow first mark if 2 x 4 (=8) or 2 x 40 (=80) seen award full marks for correct answer without working	**(2)** AO 1 1

Q4.

Question number	Answer	Additional guidance	Mark
	(sum of) the clockwise moments = (sum of) the anticlockwise moments	moment of magnet = moment of modelling clay moments are equal (size)	**(1)** **AO1**

Q5.

Question number	Answer	Additional guidance	Mark
	• An arrow showing the 'normal contact force' - from between the two surfaces, acting upwards (1) • An arrow showing the 'friction' force – from between the two surfaces (1) • Both forces in the correct directions, as shown (1) 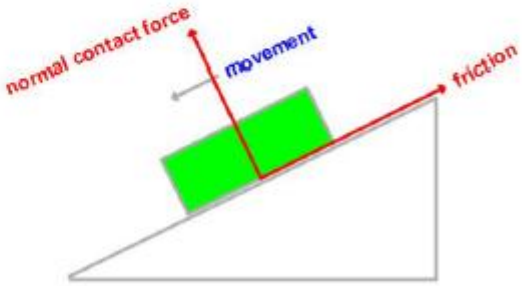 	generally upwards / away from the surface can be to the left or to the right they do not need to start from the same point	(3)

Q6.

	Answer	Acceptable answers	Mark
(a)(i)	B to the left ←		**(1)**
(a)(ii)	A accelerating		**(1)**
(a)(iii)	substitution 625x 10 (1) Evaluation 6250 (N) (1)	625 x 9.8 6125 (N) give full marks for correct answer, no working	**(2)**
(b)(i)	↑ (1) air resistance (1)	upward arrow on any part of line vertical line from any point on the diagram air friction, upthrust, drag Ignore any downward arrow labelled weight or gravity	**(2)**
(b)(ii)	Balanced (1) Zero (1)		**(2)**

Total for marks for question = 8

Q7.

Question number	Answer	Additional guidance	Mark
	Any three from: • use a higher current as the force depends on the current (1) • use more/stronger/larger range of magnets (1) • use a force meter with smaller range, e.g. 0.00 to 0.01 (1) • use a longer distance from pivot to increase the moment of the force on the wire (1)	accept voltage for current add variable resistor (in series) with power supply accept use more sensitive force meter	(3)

Q8.

Question number	Answer	Mark
	B 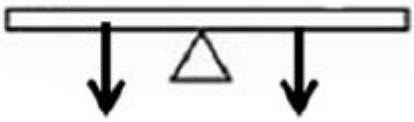 A,C and D are incorrect as the forces would cause the seesaw to turn	(1)

Q9.

Question number	Answer	Additional guidance	Mark
	B arms provide an upward force and feet act as a pivot A and C are incorrect because the rotation is not around the hands. D is incorrect because the legs are not providing an upward force that causes rotation		**(1)** **AO3**