Questions

Q1.

Figure 11 shows the shape of the magnetic field near a bar magnet.

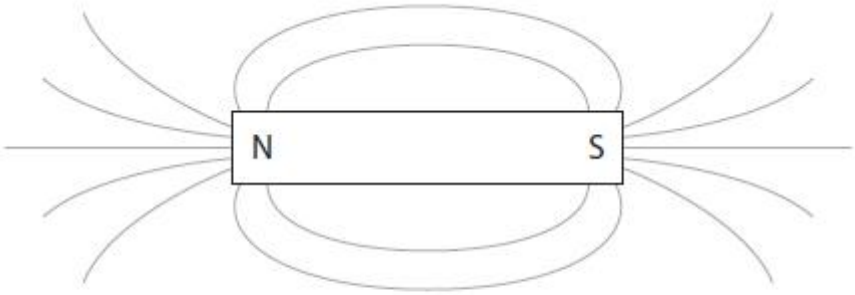

Figure 11

(i) Draw arrows on the field lines in Figure 11 to show the direction of the magnetic field.

(1)

(ii) Place a letter X on Figure 11 at a place where the magnetic field is strongest.

(1)

(iii) Describe **two** differences between the magnetic field shown in Figure 11 and a uniform magnetic field.

(2)

.....

.....

.....

.....

(Total for question = 4 marks)

Q2.

A student sets up the apparatus shown in Figure 9.

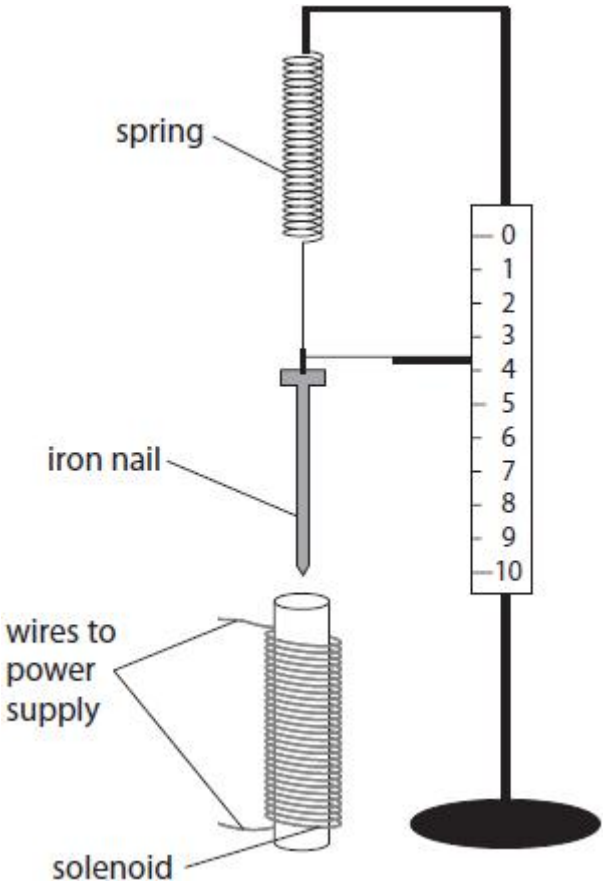

Figure 9

(i) When the current in the solenoid is switched on, the solenoid attracts the iron nail.

Describe how the student could use this apparatus to investigate how the size of the current in the solenoid affects the force of attraction between the solenoid and the iron nail.

(4)

.....

.....

.....

.....

.....

.....

.....

.....

(ii) The spring constant of a different spring is 24 N/m.

The spring is extended from its unstretched length by 12 cm.
Calculate the energy transferred in extending the spring by 12 cm.
Use an equation selected from the list of equations at the end of this paper.

(2)

energy transferred = ... J

(Total for question = 6 marks)

Q3.

Two long, thin magnets are held with their N-poles facing each other.
The force, *F*, between the magnets can be calculated using the equation

$$F = \frac{K}{d^2}$$

where

K is a constant value
d is the distance between the magnets.

(i) The magnets are 4.0 cm apart.

The force between the magnets is 1.2 N.
Calculate the value of *K*.
State the unit.

(3)

K = ... unit .....

(ii) The magnets are held the same distance apart but with the N-pole of one magnet now facing the S-pole of the other magnet.

The value of *K* does not change.
State how the force would compare with the force in part (i).

(1)

.....

.....

(Total for question = 4 marks)

Q4.

A straight piece of wire is 0.713 m long.

It is placed at right angles to a uniform magnetic field of 0.47 T.

The force on the wire is 0.089 N.

Calculate the current in the wire.

Use an equation from the formula sheet. Give your answer to an appropriate number of significant figures.

(2)

current = ... A

(Total for question = 2 marks)

Q5.

A student investigates moments of forces.

Figure 14 shows the apparatus used.

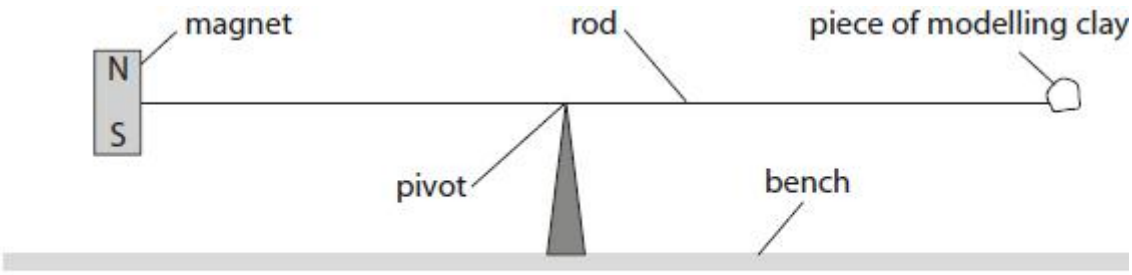

Figure 14

The pivot is under the centre of the rod.

A magnet is fixed to one end of the rod.

A piece of modelling clay is fixed to the other end of the rod.

The system is in equilibrium.

(a) The student fixes a coil to the bench under the magnet as shown in Figure 15.

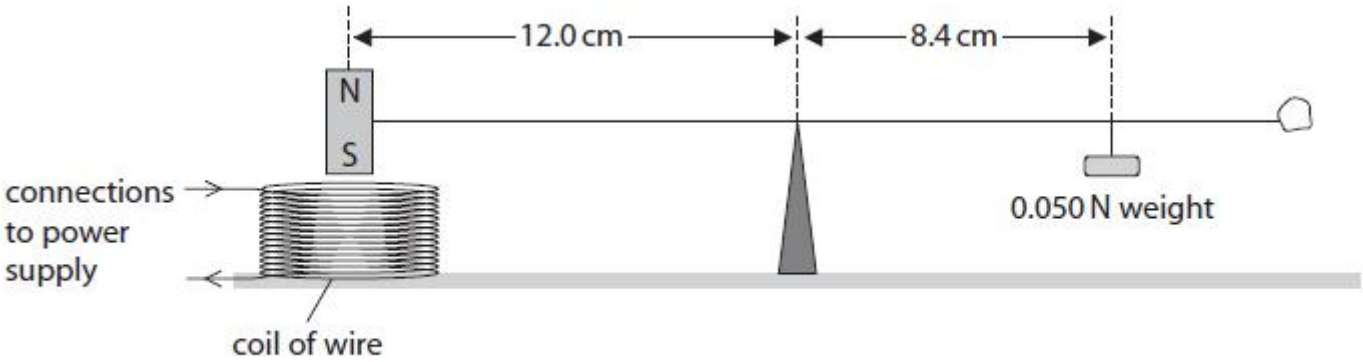

Figure 15

The coil of wire is connected to a d.c. power supply so that there is a current in the coil.
To bring the system back into equilibrium, the student hangs a 0.050 N weight on the rod, 8.4 cm away from the pivot, as shown in Figure 15.
Calculate the size of the force between the magnet and the coil.

(3)

force = ... N

(b) Describe how the student could develop the investigation to determine if the size of the force between the magnet and the coil is directly proportional to the size of the current in the coil.

(4)

.....

.....

.....

.....

.....

.....

.....

.....

(Total for question = 7 marks)

Q6.

Figure 13 shows two metal rods carrying a current.

A metal roller touches both rods and completes the circuit.
The roller is in the magnetic field produced by a magnet.

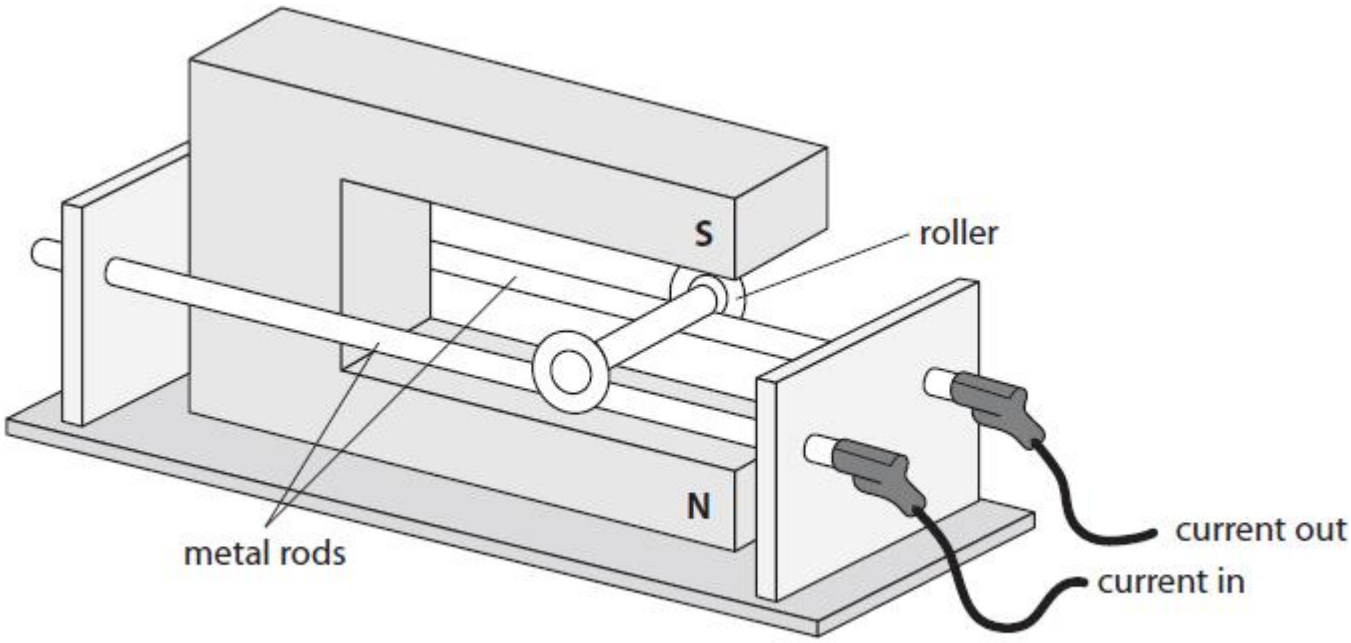

Figure 13

(i) The magnetic flux density of the magnetic field at the roller is 1.2 T.

The current in the roller is 2.5 A.
The length of the roller carrying the current is 0.060 m.
Calculate the force on the roller.
Use the equation

$$F = B \times I \times l$$

(2)

force on the roller = ... N

(ii) Describe how Fleming's left-hand rule can be used to determine the direction of the force acting on the roller.

You may draw a diagram to help your answer.

(3)

.....

.....

.....

.....

.....

.....

(iii) Draw an arrow on Figure 13 to show the direction of the force acting on the roller.

(1)

(Total for question = 6 marks)

Q7.

The magnetic flux density, *B*, is a measure of the strength of the magnetic field of a magnet.

B varies with the distance, *d*, from a magnetic pole of a magnet as given by the equation

$$B \times d^2 = K$$

where *K* is a constant for the magnet.

At a distance of 3 mm from the pole of a magnet, *B* = 650 μT.

Calculate the value of *B* at a distance of 6 mm from the pole of the magnet.

(3)

B at 6 mm = ... μT

(Total for question = 3 marks)

Q8.

A wire is placed at right angles to the Earth's magnetic field.

The wire is 0.600 m long and carries a current of 93.1 mA.

The force on the wire is 1.11×10^{-5} N.

Calculate the magnetic flux density of the Earth's magnetic field.

Use the equation

$$F = B \times I \times l$$

(2)

magnetic flux density = ... T

(Total for question = 2 marks)

Q9.

Figure 9 shows a toy that has a plastic cylinder, a plastic base and two similar magnets. Each of the two magnets is in the shape of a ring.

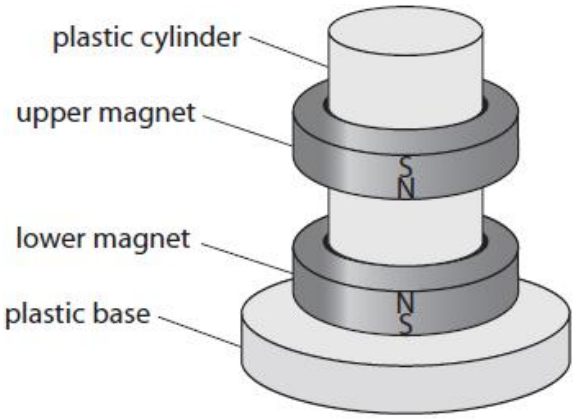

Figure 9

The upper magnet seems to float in the air above the lower magnet.

Describe the forces acting on the upper magnet.

Use the idea of magnetic fields in your answer.

(3)

.....

.....

.....

.....

.....

.....

(Total for question = 3 marks)

Q10.

Figure 8 shows two magnets with their N poles facing each other.

Figure 8

On Figure 8, draw the shape and direction of the magnetic field between the two magnets.

(Total for question = 2 marks)

Mark Scheme

Q1.

Question number	Answer	Additional guidance	Mark
(i)	consistent arrows showing magnetic field direction(s) (1) 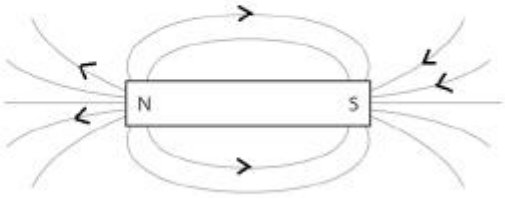	arrows showing direction out of N, towards and into S minimum of two arrows all arrows shown must be in the correct direction	(1) AO1.2

Question number	Answer	Additional guidance	Mark
(ii)	'X' placed just/immediately to the left of the N pole or just/immediately to the right of S pole (1) 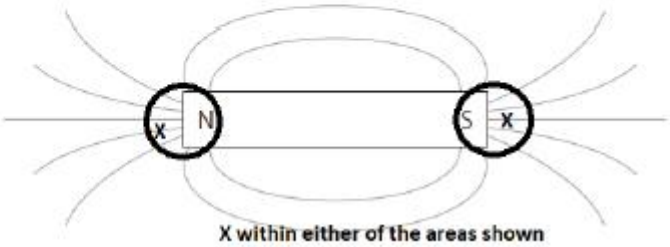 X within either of the areas shown	allow on the letters N or S do not allow further inside the magnet	(1) AO1.1

Question number	Answer	Additional guidance	Mark
(iii)	A description to include any **two** from: (in comparison with bar magnet's field shown the uniform field has:) 1. only one direction (1) 2. straight lines (1) 3. parallel lines (1) 4. equidistant lines (1) 5. same strength of field everywhere (1)	 (in comparison with uniform field the bar magnet's field lines:) vary in direction curved lines converge / diverge vary in distance(s) apart / gap vary in strength of field if no other mark is awarded, credit any diagram showing a uniform magnetic field for 1 mark	**(2)** **AO3.2**

Q2.

Question Number:	Answer	Additional Guidance	Mark
(i)	a description to include 4 of the following:		(4) AO 2 2
	• note position of pointer before current is switched on (1)	measure length of spring before current is switched on	
	• measure position of pointer when current in coil (1)		
	• (use an ammeter to) measure current (1)		
	• calculate the extension / stretch of the spring (1)	how far nail moves	
	• use force (of attraction) is proportional to extension / stretch (of spring) (1)	calculate force from spring constant and extension calibrate spring	
	• repeat with different currents (1)	increase the current calculate the extension of the spring using new position of pointer minus starting position of pointer is worth 3 marks	

Question Number:	Answer	Additional Guidance	Mark
(ii)	select and substitute (1) (E =) ½ x 24 x 0.12^2 evaluation (1) (E =) 0.17 (J)	 ½ x 24 x 12^2 max 1 mark accept answers that round down to 0.17 e.g. 0.1728 POT error (e.g. 1728) max 1 mark award full marks for correct answer without working	**(2)** AO 2 1

Q3.

Question number	Answer	Additional guidance	Mark
(i)	substitution of values (1) $1.2 = \frac{K}{4(.0)^2}$ rearrangement and evaluation (1) (K=) 19 unit (1) N cm^2	allow rearrangment before substitution (K=) 1.2 x $4(.0)^2$ 19.2 0.00192 award full marks for the correct answer without working independent mark N m^2	**(3)** **AO2**

Question number	Answer	Additional guidance	Mark
(ii)	same magnitude **and** opposite direction (1)	allow (now) attraction for opposite direction	**(1)** **AO1**

Q4.

Question number	Answer	Additional guidance	Mark
	substitution into correctly rearranged equation (1) $I = \frac{F}{B} \times l$ $= \frac{0.089}{0.47} \times 0.713$ evaluation to 2 s.f. (1) current = 0.27 (A)	give full marks for correct numerical answer without working	**(2)**

Q5.

Question number	Answer	Additional guidance	Mark
a	recall and substitution (1) (force x 12.0 =) 0.050 x 8.4 rearrangement (1) (force =) $\frac{0.050 \times 8.4}{12.0}$ evaluation (1) (force =) 0.035 (N)	allow substitution and rearrangement in either order award full marks for the correct answer without working. if no other marks scored then award 1 mark for answers that round to 29 (eg 28.57) (substitution mark)	**(3)** **AO2**

Question number	Answer	Additional guidance	Mark
b	a description to include **four** of the following measure the value of current (1) measure force or distance(1) vary the current (1) restore equilibrium of system (1) calculate ratio between force and current or distance and current (1) if ratio is the same then they are proportional (1)	 accept calculate for measure increase weight or move (existing) weight to new position plot a graph of force / distance against current graph would be a straight line (through the origin)	**(4)** **AO3**

Q6.

Question number	Answer	Additional guidance	Mark
i	substitution (1) (F=) 1.2 x2.5 x0.06 evaluation (1) 0.18 (N)	award full marks for the correct answer without working	(2)

Question number	Answer	Additional guidance	Mark
(ii)	a description to include first finger, second finger and thumb (of left-hand) held mutually perpendicular (1) first finger (is in the direction of) magnetic field OR second finger (is in the) direction of) current (1) thumb (is in the) direction of force / motion (1)	award 1 mark for attempt at mutually perpendicular shown in a diagram diagram relating thumb and fingers to correct quantities at right angle gains 3 marks	(3)

Question number	Answer	Additional guidance	Mark
(iii)	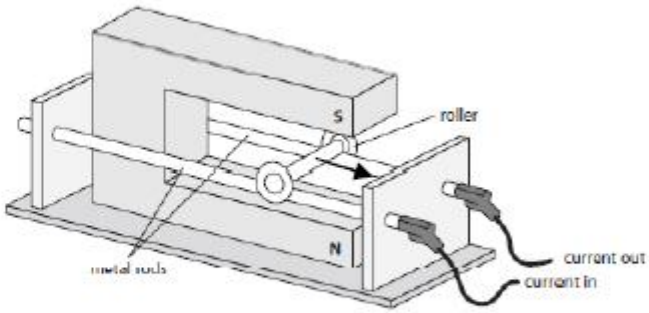 arrow from roller towards contacts (1)		(1)

Q7.

Question number	Answer	Additional guidance	Mark
	substitution and evaluation of K (1) (K = 650 x 3^2 =) 5.85 (x 10^3) substitution (1) B x 6^2 = 5.85 (x 10^3) rearrangement and evaluation (1) (B =) 160 (μT) **OR ALTERNATIVE METHOD** substitution (1) 650 x 3^2 = B x 6^2 rearrangement (1) (B=) $\frac{650 \times 3^2}{6^2}$ evaluation (1) (B =) 160 (μT)	distance doubles e.g. 6/3 = 2 B changes by factor of 4 e.g. 2^2 = 4 accept values that round to 160 e.g. 162.5 or 163.89 (B=) $\frac{650}{4}$ accept values that round to 160 e.g. 162.5 or 163.89 award 2 marks for a value that rounds to 160 to any other power of ten award full marks for correct answer without working	**(3)** **AO2**

Q8.

Question number	Answer	Additional guidance	Mark
	rearrangement and substitution (1) $(B = \frac{F}{I \times l})$ $= \frac{1.11 \times 10^{-5}}{93(.1 \times 10^{-3}) \times 0.6(000)}$ evaluation (1) 2.0×10^{-4} (T)	0.0002 (T) accept any number that rounds to 2.0×10^{-4} (T) e.g. 1.989×10^{-4} (T) any number that rounds to 2.0×10^{-7} (T) e.g. 1.987×10^{-7} (T) is awarded 1 mark only award full marks for the correct answer without working	**(2)** **AO2.1**

Q9.

Question number	Answer	Additional guidance	Mark
	any **three** from	marks can be awarded from a correctly labelled diagram	**(3)** **AO1**
	magnetic **fields** interact (1)	magnets are in each other's magnetic **field**	
	(force due to) repulsion (between magnets) (1)	repel / push away	
	(repulsion) force upwards (on upper magnet) (1)		
	weight / gravitational force (downwards on upper magnet) (1)	accept gravity (acts downwards)	
	forces equal size / in equilibrium (1)	forces are balanced	
		ignore references to charge	

Q10.

Question number	Answer	Additional guidance	Mark
	at least four lines as shown (1) at least two arrows directed away from N poles (1) 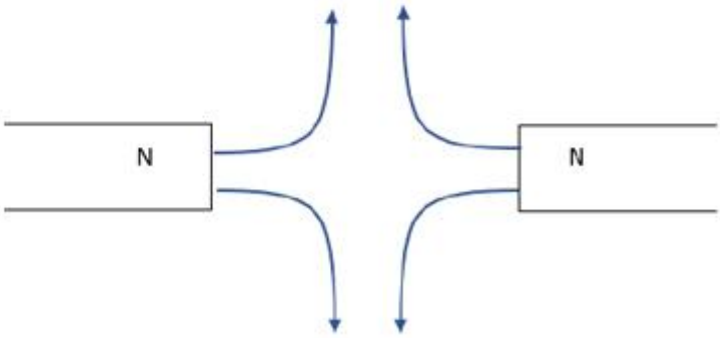 	lines must not intersect (cross over) ignore continuation of lines to S of a magnet independent mark do not award if one or more arrows shown pointing towards N pole	**(2)** **AO1**