Questions

Q1.

A student uses plotting compasses to investigate the magnetic field between the poles of two bar magnets.

Figure 12 shows **one** of the plotting compasses and **one** of the bar magnets.

Figure 12

The student places the two magnets on a piece of paper with a pole of one magnet a few centimetres away from a pole of the other magnet.

The student places 20 plotting compasses on the paper near the magnets.

Figure 13 shows the direction in which each of the plotting compasses points.

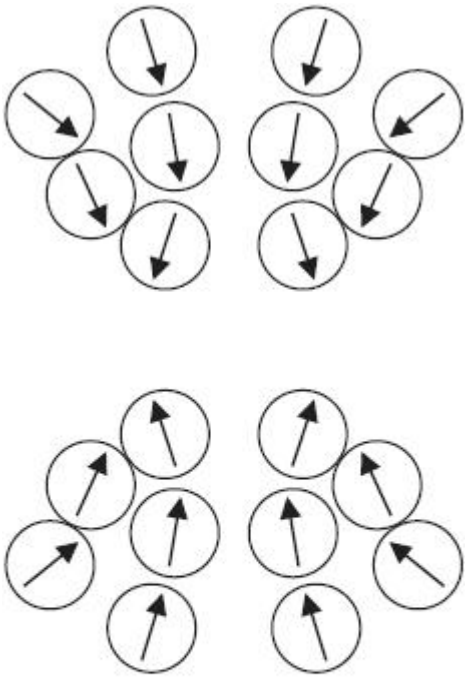

Figure 13

(i) Draw two rectangles on Figure 13 to show the positions of the two bar magnets.
Label the N-pole and the S-pole of each magnet.

(2)

(ii) The student wants to determine the shape of the magnetic field for a larger area around the magnets.
Describe how the student should continue the investigation using just one plotting compass.

(3)

.....

.....

.....

.....

.....

.....

(Total for question = 5 marks)

Q2.

A teacher has a pile of steel nails, a magnet and some plastic strips that are all the same size.

The teacher places a plastic strip under the magnet and picks up some nails from the pile, as shown in Figure 12.

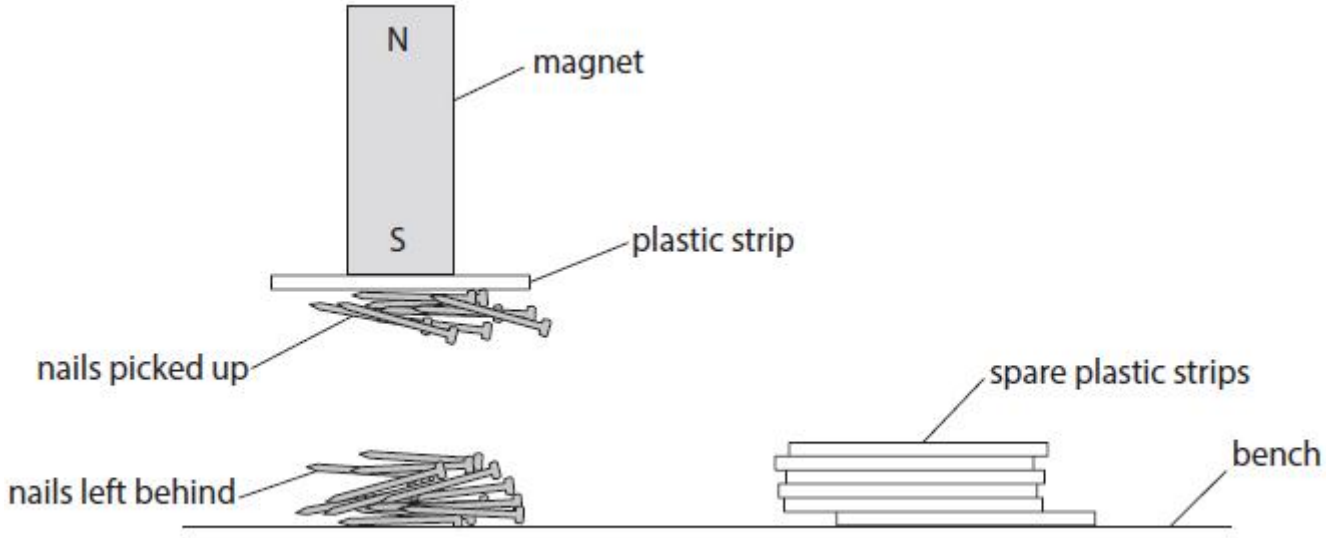

Figure 12

Some nails are not picked up and are left behind on the bench.

The teacher investigates how the number of nails that can be picked up changes when the number of plastic strips under the magnet is increased.

The results are shown in Figure 13.

	number of nails picked up				
number of plastic strips	1st trial	2nd trial	3rd trial	4th trial	mean
1	12	13	12	13	12.5
2	11	.....	12	12	12.0
3	10	12	11	12	11.25
4	7	9	8	12	9.0
5	6	6	8	7	6.75
6	3	5	4	6	4.5
7	1	2	3	2	2.0

Figure 13

(i) Complete Figure 13 to show the missing value.

(1)

(ii) Use the data in Figure 13 to complete the bar chart in Figure 14.

(1)

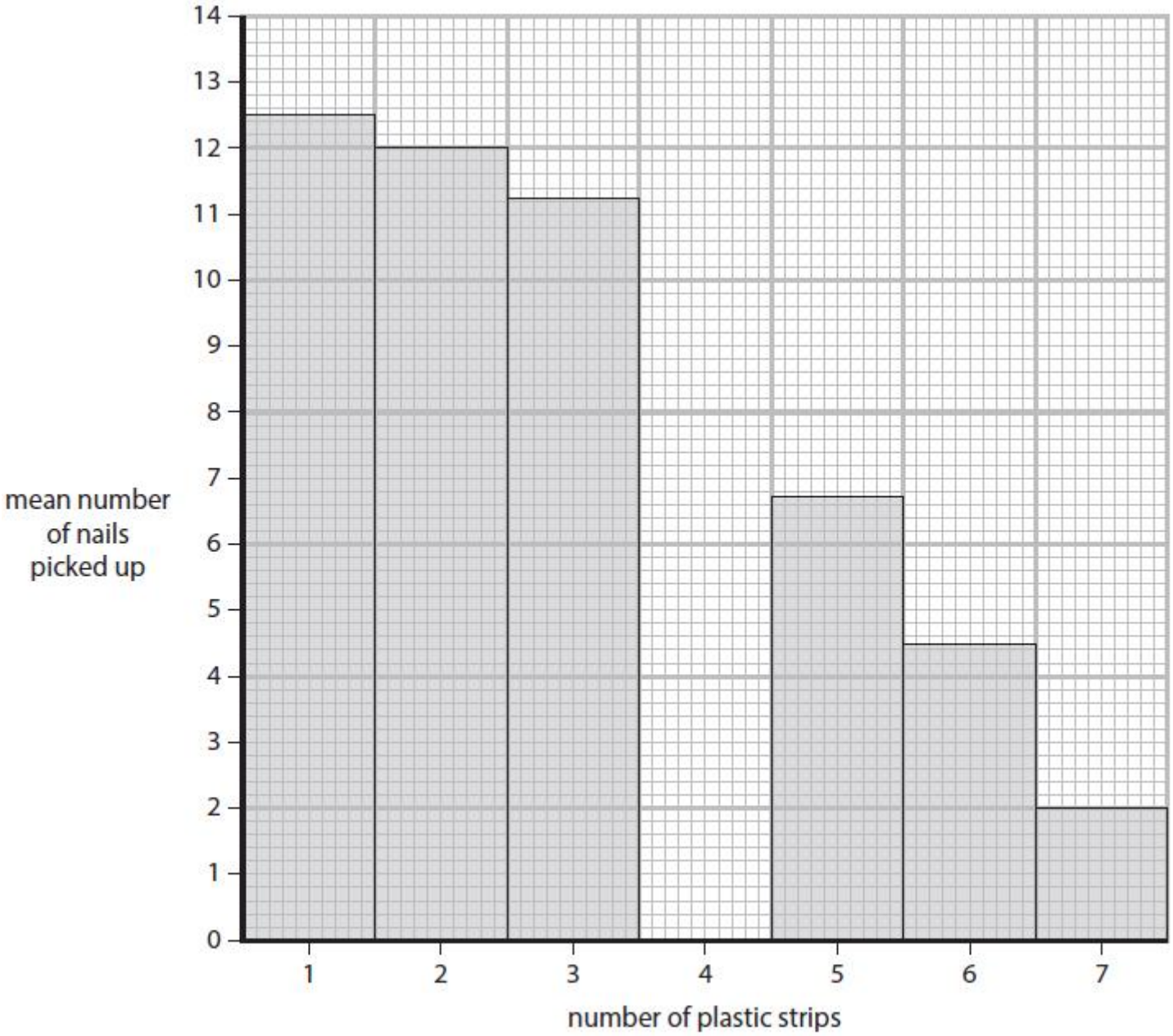

Figure 14

(iii) Use Figure 14 to describe the relationship between the number of plastic strips and the mean number of nails picked up.

(2)

.....

.....

.....

.....

(iv) A student thinks that none of the nails used in the investigation become permanently magnetised.

Suggest how the student could test this hypothesis.

(2)

.....

.....

.....

.....

.....

.....

(Total for question = 6 marks)

Q3.

A student investigates the relationship between the magnetic flux density and the electromagnetic force on a current-carrying wire.

The student has the equipment shown in Figure 19.

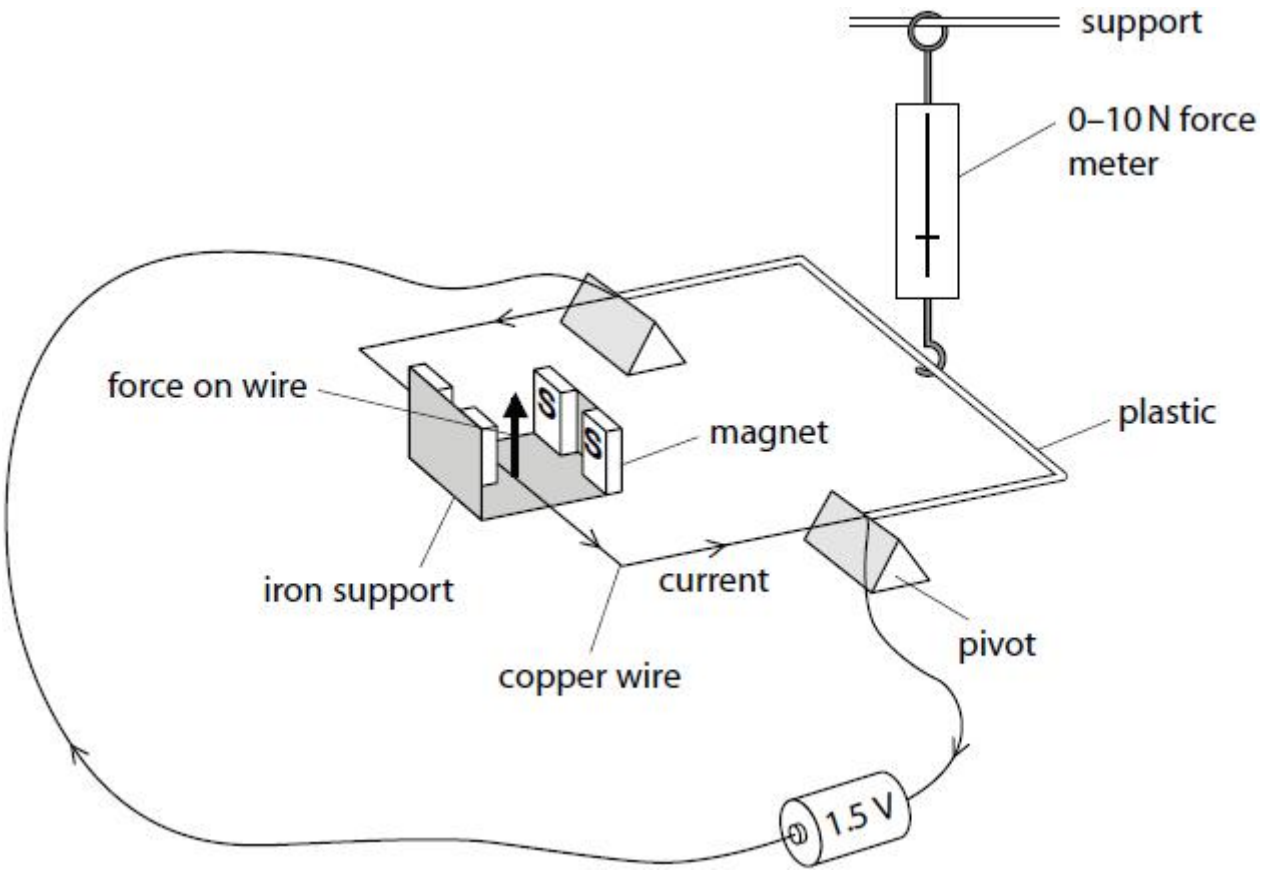

Figure 19

The student varies the number of magnets and measures the force on the wire using the force meter.

The results are shown in Figure 20.

number of pairs of magnets	reading on force meter (N)
1	0.0
2	0.0
3	0.1

Figure 20

The student decides that his equipment is not sufficiently sensitive.

Give **three** ways the student should develop his investigation to improve the quality of his results.

(3)

1 .....

.....

2 .....

.....

3 .....

.....

(Total for question = 3 marks)

Q4.

Answer the question with a cross in the box you think is correct ☒. If you change your mind about an answer, put a line through the box ☒ and then mark your new answer with a cross ☒.

A student uses a plotting compass to investigate the magnetic field around a wire.

Figure 10 shows the wire going straight through a card.

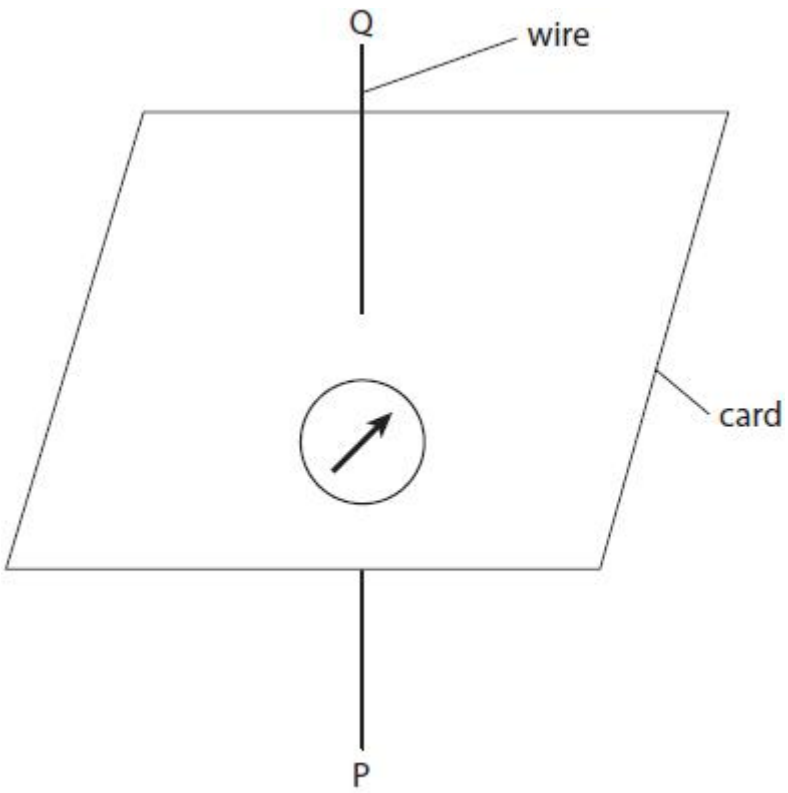

Figure 10

Figure 10 shows the compass needle when there is no current in the wire.

(i) Which of these shows a possible direction of the compass needle when there is a current in the wire going from P to Q?

(1)

☐ **A** ☐ **B** ☐ **C** ☐ **D**

(ii) Describe how the student could develop the investigation to find the shape of the magnetic field produced by the current.

(3)

.....

.....

.....

.....

.....

.....

(Total for question = 4 marks)

Q5.

Answer the question with a cross in the box you think is correct ☒. If you change your mind about an answer, put a line through the box ☒ and then mark your new answer with a cross ☒.

Figure 11 shows the magnetic field of a magnet.

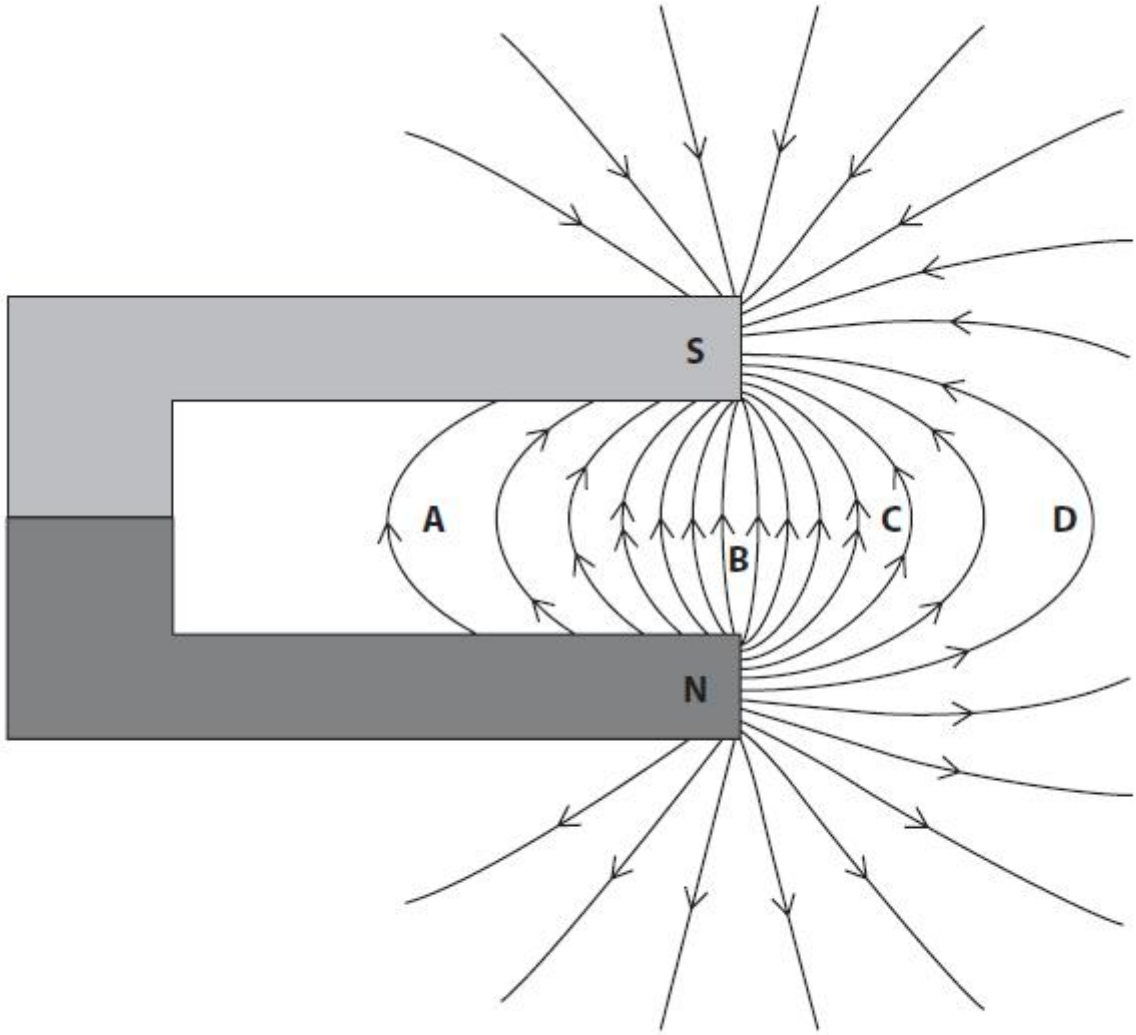

Figure 11

At which point is the magnetic field strongest?

(1)

- ☐ **A**
- ☐ **B**
- ☐ **C**
- ☐ **D**

(Total for question = 1 mark)

Q6.

Answer the question with a cross in the box you think is correct ☒. If you change your mind about an answer, put a line through the box ☒ and then mark your new answer with a cross ☒.

Figure 11 shows a copper wire between two magnetic poles.

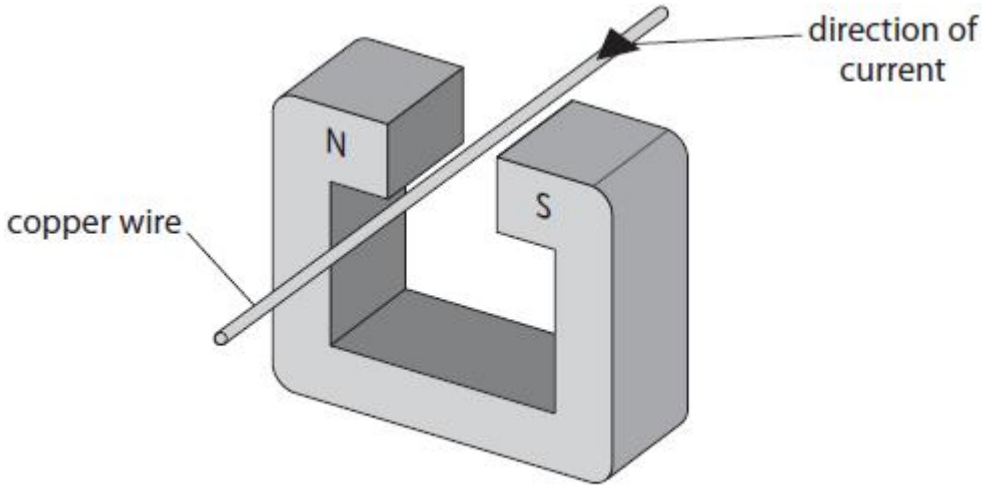

Figure 11

The current in the wire is in the direction shown by the arrow.

The wire experiences a force due to the magnetic field.

(i) The direction of the force due to the magnetic field is

(1)

☐ **A** down

☐ **B** up

☐ **C** towards the north pole of the magnet

☐ **D** towards the south pole of the magnet

(ii) The interaction between the magnetic fields produced by the magnet and the current in the wire produces forces on the magnet and the wire.
Compare these two forces.

(1)

.....

.....

(iii) Figure 12 shows a different wire inside a uniform magnetic field.

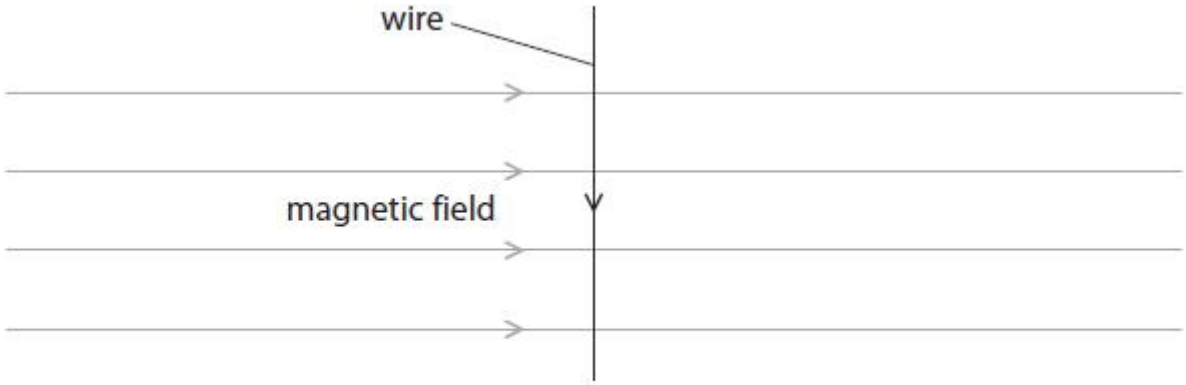

Figure 12

The magnetic flux density of the magnetic field is 0.72 N/A m.
The length of the wire inside the field is 30 mm.
The size of the force due to the magnetic field on the wire is 0.045 N.

Calculate the size of the current in the wire.

Use an equation selected from the list of equations at the end of this paper.

(3)

current in the wire = ... A

(Total for question = 5 marks)

Q7.

The battery inside an electric toothbrush is recharged when the toothbrush is placed on its charger.

Figure 9 shows part of the toothbrush and the charger.

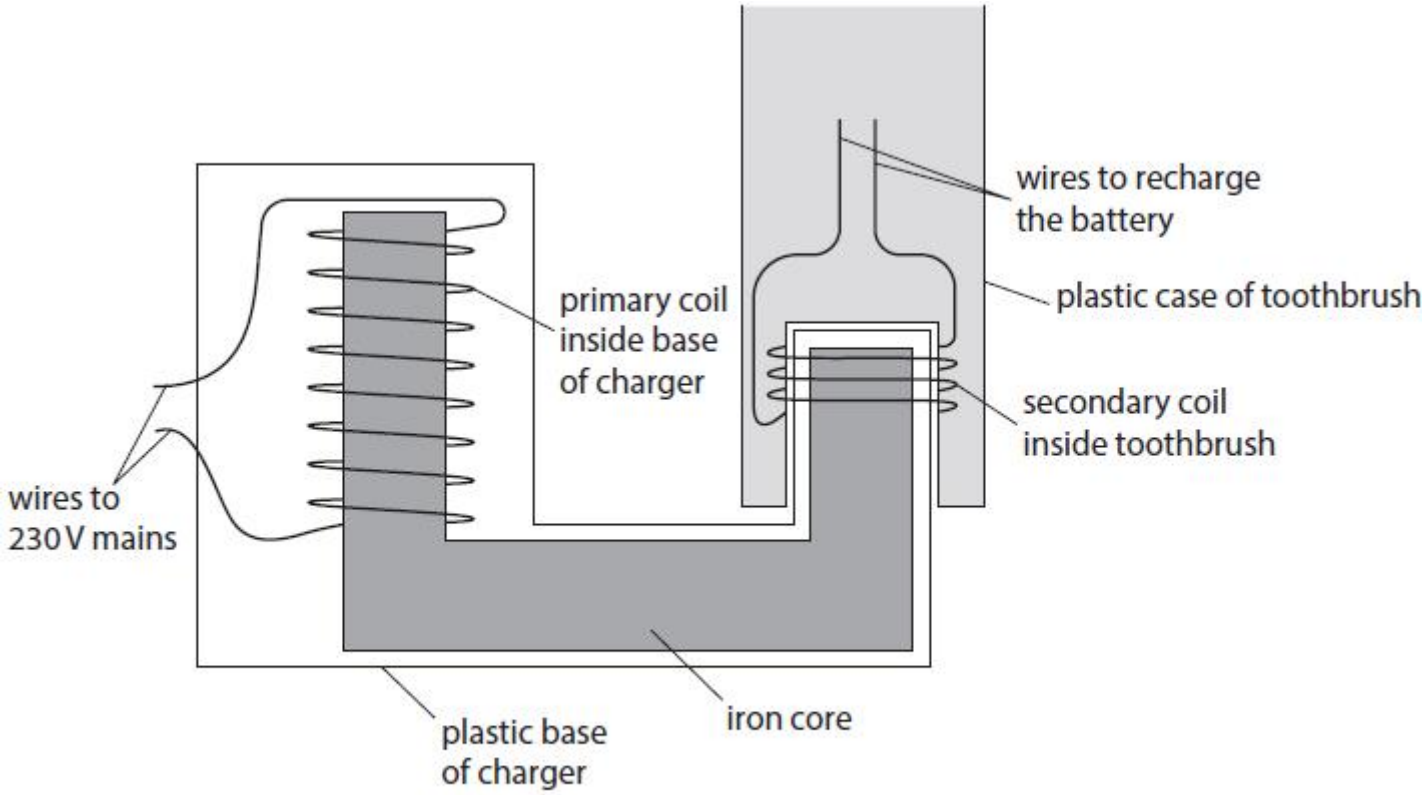

Figure 9

Figure 10 shows a simplified diagram of the split ring commutator in a d.c. electric motor.

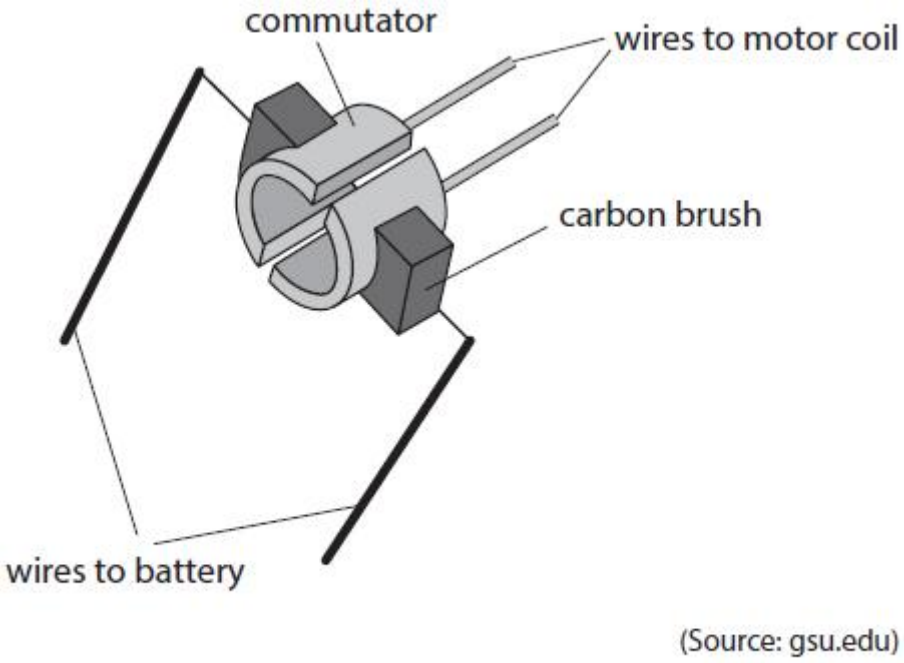

Figure 10

Explain the function of the commutator in a d.c. electric motor.

(3)

.....

.....

.....

.....

.....

.....

(Total for question = 3 marks)

Q8.

A power transmission wire hangs so that it is at right angles to the Earth's magnetic field.

Although this magnetic field is constant, the cable experiences a changing force.

Explain why the force experienced by the cable changes.

(4)

.....

.....

.....

.....

.....

.....

.....

.....

(Total for question = 4 marks)

Q9.

Figure 13 represents the Earth.

Figure 13 shows **two** magnetic compass needles placed near to the Earth's surface, at points Q and T.

Each magnetic compass needle can rotate about its central dot.

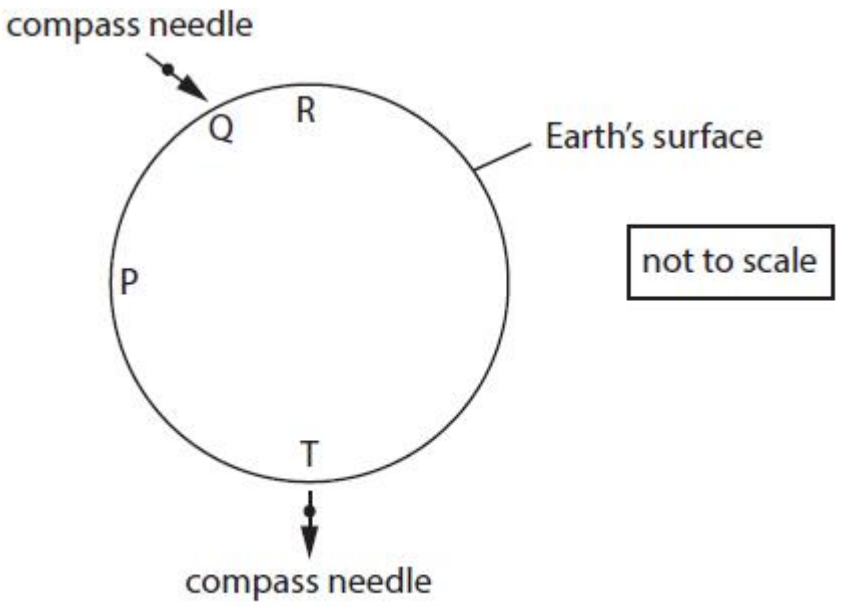

Figure 13

(i) A compass needle is placed at point P and another at point R, near to the Earth's surface.

On Figure 13, draw an arrow at point P and an arrow at point R to show the direction of the compass needle at each point.

(2)

(ii) Explain why the arrows point in the directions you have drawn in part (i).

You may draw on Figure 13 to help your answer.

(3)

.....

.....

.....

.....

.....

.....

(Total for question = 5 marks)

Q10.

Figure 12 shows a wire carrying a current.

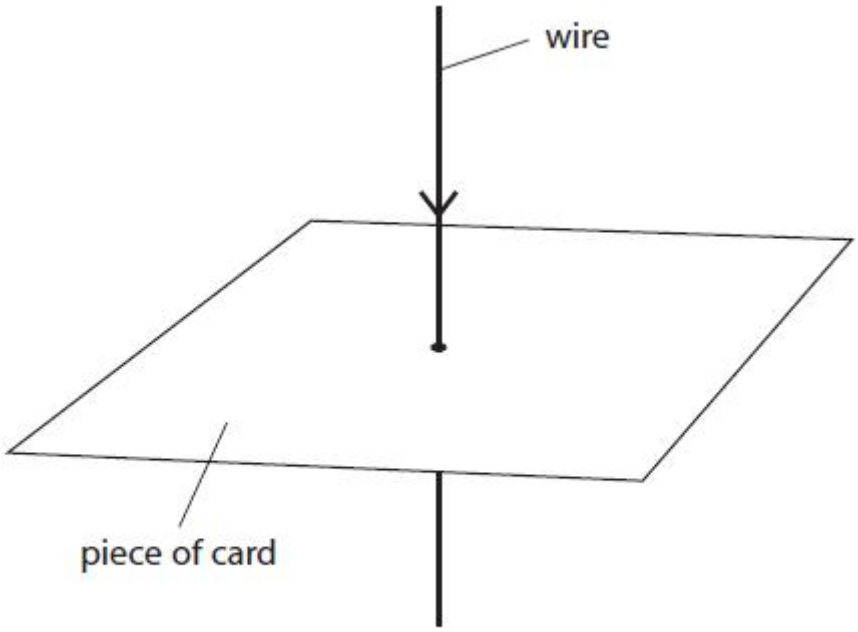

Figure 12

Draw, on the card in Figure 12, the magnetic field that is produced by the current.

(2)

(Total for question = 2 marks)

Mark Scheme

Q1.

Question number	Answer	Additional guidance	Mark
(i)	example: 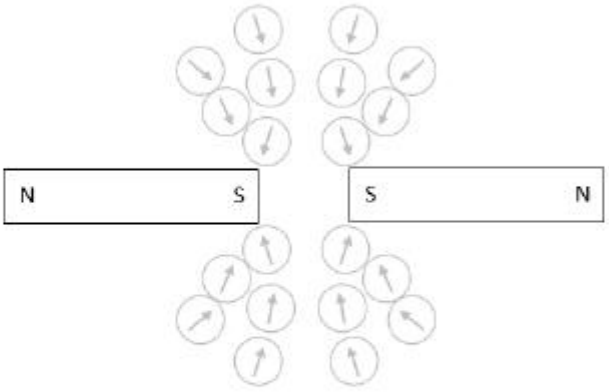 rectangles in (approximately) correct position (1) all four poles correctly labelled (1)	judge by eye but do not allow rectangles in contact	(2) AO3

Question number	Answer	Additional guidance	Mark
(ii)	a description to include place a (plotting) compass on the paper (near to the magnet(s)) and mark direction of the field (at that point) (1) determine how the field continues from that point (1) connect field lines to reveal overall shape(1)	 place a (plotting) compass on the paper (near to the magnet(s)) and put a dot at each end of the needle move compass so that one end of the needle is over the mark (just made) join up the dots	(3) AO1

Q2.

Question number	Answer	Additional guidance	Mark
(i)	13		(1) AO2

Question number	Answer	Additional guidance	Mark
(ii)	Column drawn at height of 9.0 (1) e.g. 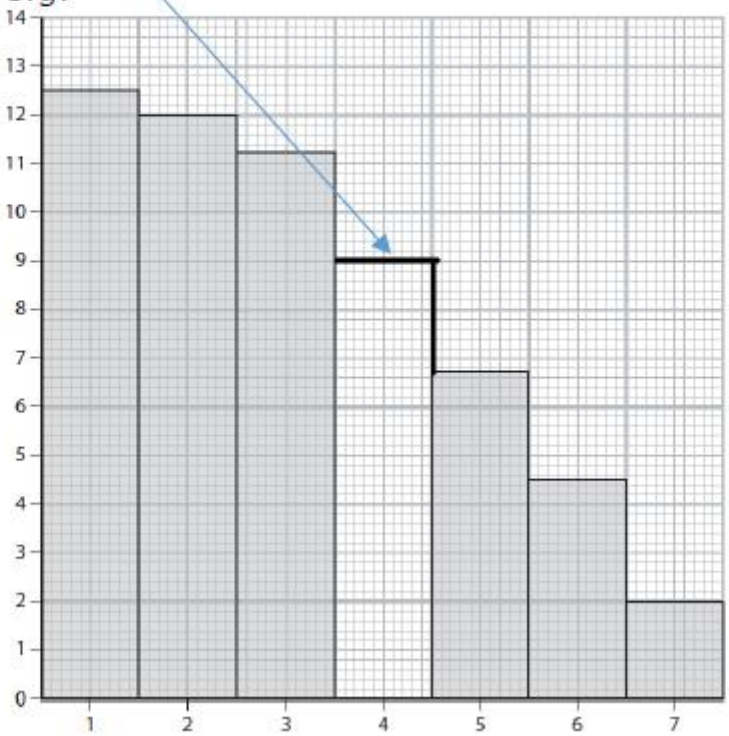 	Allow ½ square tolerance must have horizontal and vertical lines drawn ignore shading / fill	(1) AO2

Question number	Answer	Additional guidance	Mark
(iii)	a description to include as number of strips increase, the number of nails (picked up) decreases (1) (relationship is) non-linear (1)	 allow reverse argument allow negative correlation one goes up and one goes down allow description of non-linearity e.g. change is not in even steps / non-uniform ignore inversely proportional	**(2)** **AO3**

Question number	Answer	Additional guidance	Mark
(iv)	a suggestion to include suitable test (1) expected result (before and after) (1)	 put near to a magnet / compass needle put near to (unmagnetised) iron (filings) put next to each other (same end of) nail attracted to **both** poles of magnet/ compass needle do not pick up (unmagnetised) iron (filings) are not attracted to each other accept reverse test result for magnetised nails	**(2)** **AO3**

Q3.

Question number	Answer	Additional guidance	Mark
	Any three from: • use a higher current as the force depends on the current (1) • use more/stronger/larger range of magnets (1) • use a force meter with smaller range, e.g. 0.00 to 0.01 (1) • use a longer distance from pivot to increase the moment of the force on the wire (1)	accept voltage for current add variable resistor (in series) with power supply accept use more sensitive force meter	(3)

Q4.

Question Number	Answer	Mark
(i)	**The only correct answer is A** 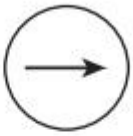 **B is incorrect** because it is not tangential to the (circular) magnetic field lines produced by the current **C is incorrect** because it is not tangential to the (circular) magnetic field lines produced by the current **D is incorrect** because it is not tangential to the (circular) magnetic field lines produced by the current	(1)

Question Number	Answer	Additional guidance	Mark
(ii)	A description of the method that includes: **EITHER** (using single compass) record field at one location (1) find how field continues (1) connect the dots (to reveal overall shape of field / line) (1) **OR** arrange multiple compasses (1) over all of the card (1) direction of (all of) the compass needles indicates shape of field (1)	Marking points may be awarded from a diagram. mark where compass points **or** put dots at each end of needle / arrow move compass to new position / until needle over previous dot start from different position and repeat (idea of obtaining concentric circles) all the way round the wire	(3)
	OR sprinkle iron filings on card (before current is switched on) (1) switch on current/ tap card (1) pattern produced indicates shape of field (1)	allow iron filings to arrange themselves	

Q5.

Question number	Answer	Mark
	B 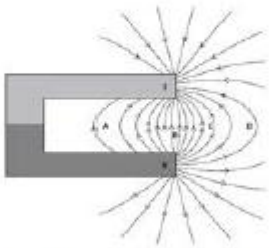 A,C and D are in the areas where the field lines are further apart and the field is weaker	(1)

Q6.

Question Number	Answer	Additional guidance	Mark
(i)	**The only correct answer is B:** up **A is incorrect** because it does not follow the "Left Hand Rule" **C is incorrect** because it is not perpendicular to the direction of the magnetic field. **D is incorrect** because it is not perpendicular to the direction of the magnetic field.		(1)

Question Number	Answer	Additional guidance	Mark
(ii)	A description that includes: (forces are) equal (in size) **and** opposite (in direction)	accept (in this context) forces balance	(1)

Question Number	Answer	Additional guidance	Mark
(iii)	substitution into $F = B \times I \times l$ (1) $0.045 = 0.72 \times I \times 30\ (\times 10^{-3})$ rearrangement (1) $(I =) \frac{F}{B \times l}$ OR $\frac{0.045}{0.72 \times 30\ (\times 10^{-3})}$ evaluation (1) 2.1 (A)	rearrangement and substitution can be in either order $(I =) \frac{45}{21.6}$ accept answers that round to 2.1 (A) accept final value rounded down to 2 leave POT until final evaluation award full marks for the correct answer without working	(3)

Q7.

Question number	Answer	Additional guidance	Mark
	an explanation linking	mark points may be seen as candidate's annotation(s) on Figure 10 allow motor for coil throughout	**(3)** **AO1**
	(commutator) carries current from (battery) wires to coil (1)	current enters copper conductor(s) via (carbon) brush(es) (commutator) connects coil to battery	
	direction of current in coil(s) changes each half turn (1)	reverses current (in coil) / swaps connections (to the coil)	
	to keep force between coil(s) and magnet in the same direction (1)	keep coil(s) turning in the same direction keep coil continuously turning	

Q8.

Question number	Answer	Additional guidance	Mark
	An explanation that combines identification – understanding (1 mark) and reasoning/justification – understanding (3 marks): • the transmission wire carries an alternating current (1) • the force is caused by this current which varies in size and direction (1) • the direction of this force depends on the direction of the current so the direction of the force also changes (1) • the magnitude of this force depends on the magnitude of the current so the magnitude of the force also changes (1)	allow responses that link the changes in the force to the interaction of the changing field around the wire with the constant field of the Earth	**(4)**

Q9.

Question number	Answer	Additional guidance	Mark
i	arrow pointing up the page at P (1) arrow pointing down the page at R (1)	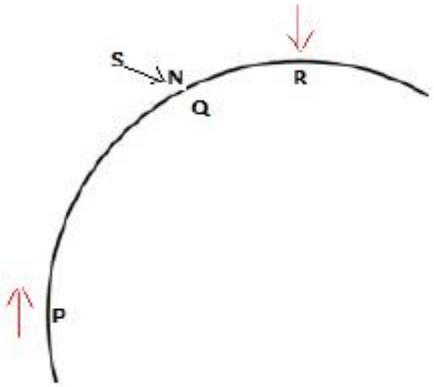 judge directions by eye – within 10° acceptable as a guide allow arrows inside or outside the circle	**(2)** **AO3.1**

Question number	Answer	Additional guidance	Mark
ii	an explanation linking any **three** from: Earth has a magnetic field (1) (magnetic compass) needle/arrow points in the direction of the field (1) (Earth's magnetic) field goes into Earth at Q and/or R / comes out of Earth at T (1) (Earth's magnetic) field runs parallel to Earth's surface at P (1) Q and/or R are at (magnetic) south pole / T is at (magnetic) north pole (1)	credit answers shown in Figure 13 the core is magnetic / (it is as if there were a) magnet inside the Earth (north pole of compass) needle/arrow points to south pole of magnet magnetic field lines go from north to south poles **of magnet** magnetic south pole of Earth is at (geographic) north pole or RA	**(3)** **AO3.1**

Q10.

Question number	Answer	Additional guidance	Mark
	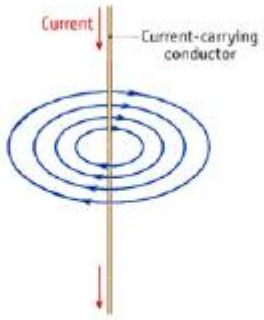 at least two concentric circles (1) arrows correct (1)	separation of the circles is increasing	(2)