Questions

Q1.

A student uses the apparatus in Figure 3 to determine the specific heat capacity of water.

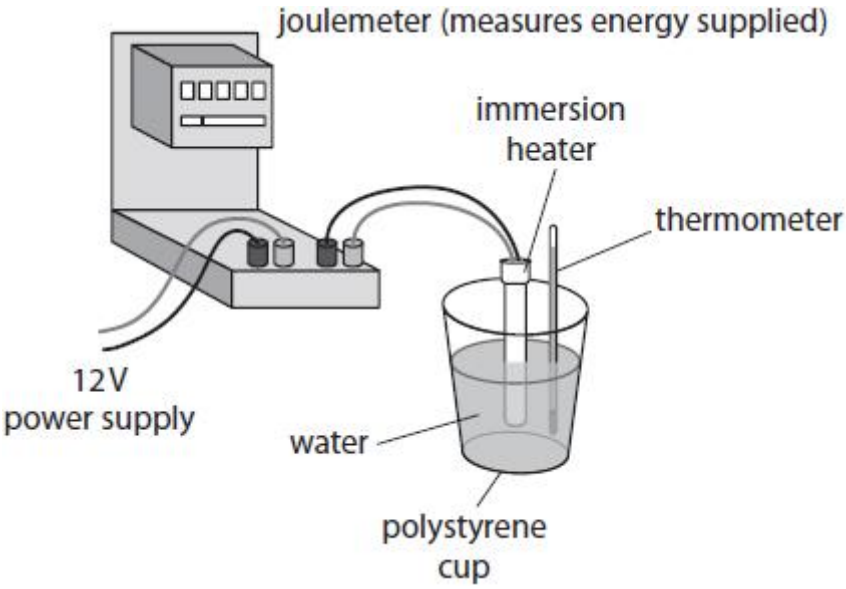

Figure 3

(i) State the measurements needed to calculate the specific heat capacity of water.

(4)

.....

.....

.....

.....

.....

.....

.....

.....

(ii) State **two** ways that the apparatus could be adapted to improve the procedure.

(2)

1 .....

.....

2 .....

.....

(Total for question = 6 marks)

Q2.

Figure 2 shows a rubber tube that can be used inside a bicycle tyre.

The tube is inflated with a bicycle pump.

Figure 2

(i) The air inside the tube exerts an outward force on the wall of the tube.

State the angle that this outward force makes with the wall of the tube.

(1)

.....

.....

(ii) It takes 4.8 litres of air from the atmosphere to inflate the empty tube to a pressure of 400 000 Pa.

Atmospheric pressure is 100 000 Pa.
Calculate the volume of air inside the tube.
Assume the temperature of the air inside the tube is the same as the temperature of the air outside the tube.
Use an equation selected from the list of equations at the end of this paper.

(3)

volume = ... litres

(iii) When a bicycle pump is used to inflate the tube, the air in the bicycle pump gets warm.

You should ignore any effects of friction in the pump.
Explain why the air in the bicycle pump gets warm.

(2)

.....

.....

.....

.....

(Total for question = 6 marks)

Q3.

Figure 1 shows air inside a cylinder with a movable piston.

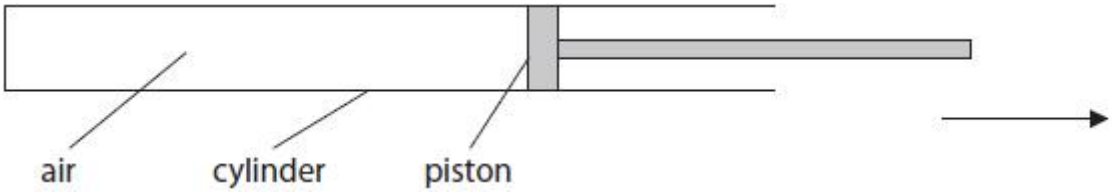

Figure 1

The piston is pulled a little way in the direction of the arrow, but stays inside the cylinder.

Which of these increases?

(1)

- ☒ **A** The mass of the air inside the cylinder.
- ☒ **B** The rate at which air particles collide with the walls of the cylinder.
- ☒ **C** The volume of the air inside the cylinder.
- ☒ **D** The pressure of the air inside the cylinder.

(Total for question = 1 mark)

Q4.

A student wants to determine the specific heat capacity of copper.

Figure 5 shows a piece of copper, with a thread tied around it, in a glass beaker of boiling water.

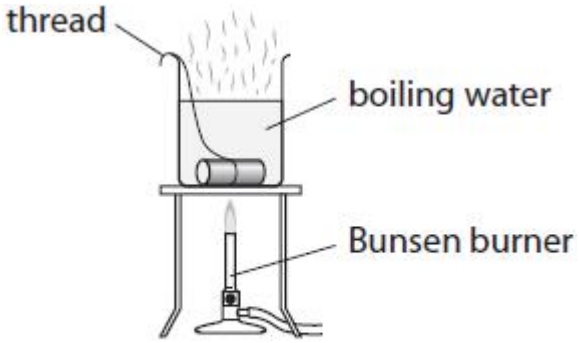

Figure 5

The student leaves the piece of copper in the boiling water so that the copper reaches a temperature of 100 °C.

The student uses the thread to take the piece of copper out of the boiling water.

The student puts the hot piece of copper into a different beaker of cold water at 20 °C.

The apparatus is shown in Figure 6.

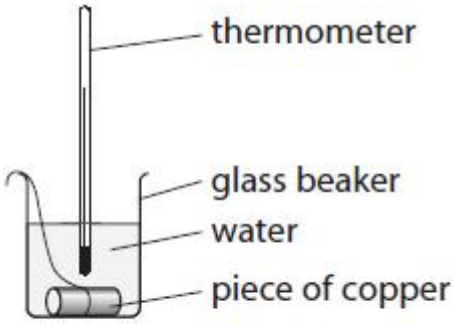

Figure 6

The student assumes that the thermal energy gained by the water equals the thermal energy lost by the piece of copper.

The water and copper both reach a temperature of 22 °C.

The cold water gains 1050 J of energy.

The mass of the piece of copper is 0.058 kg.

(i) Calculate a value for the specific heat capacity of copper, using these results.

Use the equation

change in thermal energy = mass × specific heat capacity × change in temperature

$$\Delta Q = m \times c \times \Delta\theta$$

(2)

specific heat capacity of copper from these results = ... J/kg °C

(ii) The value for the specific heat capacity of copper obtained from the student's results is lower than the correct value.

State **two** ways that the experiment could be improved to give a value that is closer to the correct value.

(2)

1 .....

.....

2 .....

.....

(Total for question = 4 marks)

Q5.

A teacher heats a block of wax until all the wax melts.

The teacher pours the melted wax into a container and allows the wax to cool.

Figure 7 shows how the temperature of the wax changes during a time of 20 minutes.

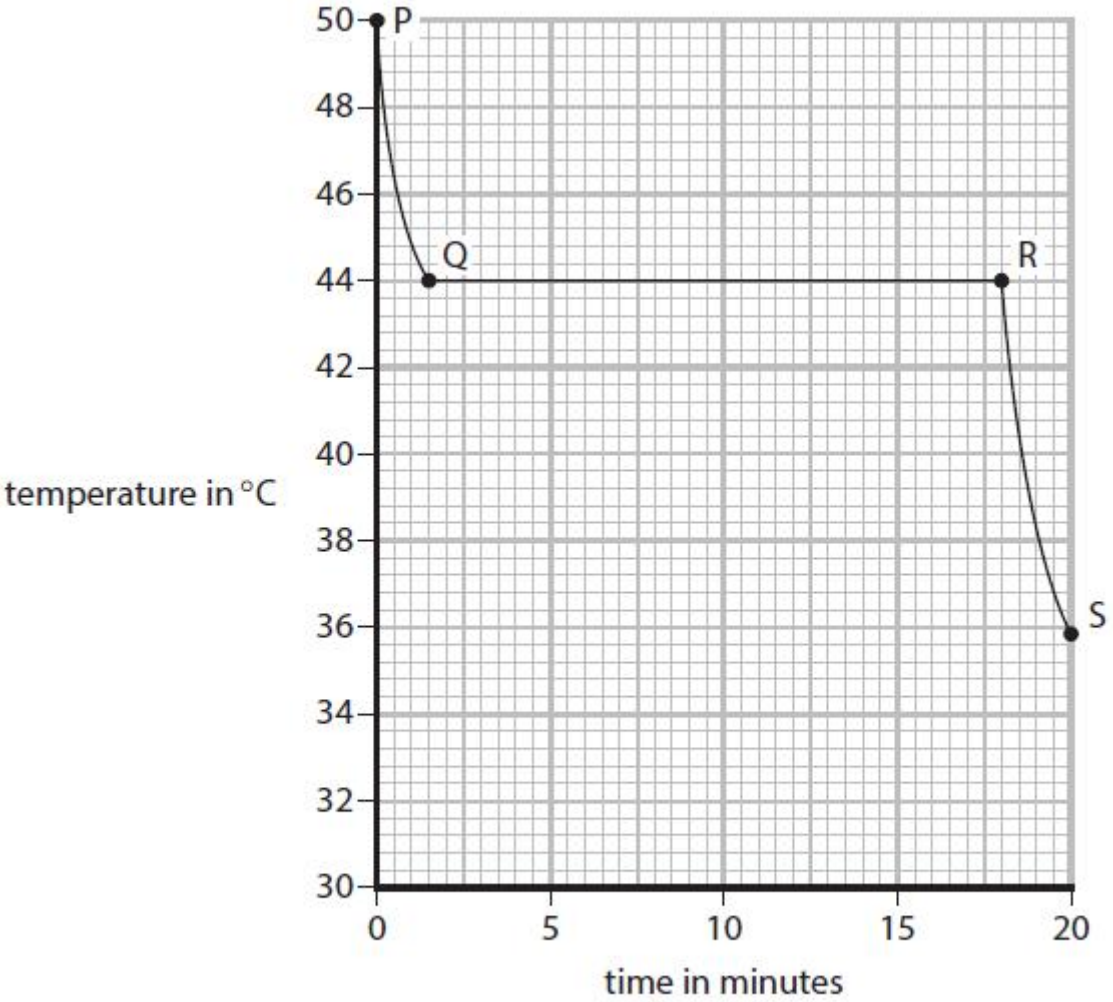

Figure 7

Four different points on the graph are labelled P, Q, R and S.

Figure 8 shows the values of some properties of the wax.

property	value
density when solid	930 kg / m³
density when liquid	830 kg / m³
specific latent heat	190 kJ / kg
specific heat capacity of solid wax	2.1 kJ / kg °C

Figure 8

(i) The wax has a mass of 3.9 kg.

Using information from Figure 8, calculate the volume of the wax when it is all liquid.
Use the equation

$$\rho = \frac{m}{V}$$

(2)

volume = ... m^3

(ii) State, using information from Figure 8, how the volume of the wax changes when it becomes a solid.

(1)

.....

.....

(iii) Explain why, using Figure 8, the time from R to S is much shorter than the time from Q to R on the graph in Figure 7.

(3)

.....

.....

.....

.....

.....

.....

(Total for question = 6 marks)

Q6.

Aluminium has a melting point of 660 °C.

The absolute zero of temperature is −273 °C.

(i) Calculate the melting point of aluminium in kelvin.

(1)

melting point of aluminium = ... K

(ii) Describe the motion of particles in liquid aluminium (above 660 °C).

(2)

.....

.....

.....

(Total for question = 3 marks)

Q7.

A steel ball has a volume of 3.6 cm^3 and a mass of 28 g.

(i) Calculate the density of steel in kg/m^3.

(3)

density = ... kg/m^3

(ii) The steel ball is at a room temperature of 20 °C.

It is then put in a pan of boiling water maintained at 100 °C.
Calculate how much thermal energy the ball gains as its temperature increases from 20 °C to 100 °C.
Specific heat capacity of steel = 510 J/ kg °C
Use an equation selected from the list of equations at the end of this paper.

(2)

thermal energy gained = ... J

(iii) The steel ball is put into a furnace where it melts.

Compare the motion of particles in the steel when they are in the solid state with their motion when in the molten (liquid) state.

(3)

.....

.....

.....

.....

.....

.....

(Total for question = 8 marks)

Q8.

Figure 22 shows a storage heater.

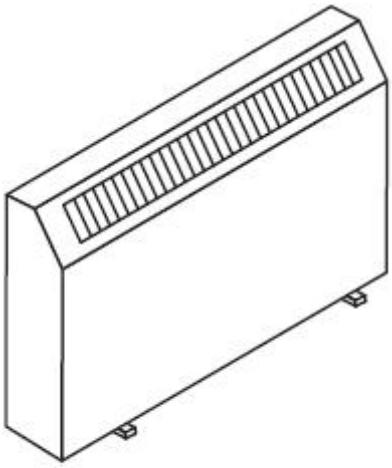

Figure 22

The storage heater contains bricks.

The bricks are heated electrically.

The electrical heater supplies 210 kJ of energy to each brick in the storage heater.

One brick has a mass of 5.8 kg.

The specific heat capacity for the brick is 860 J/kg K.

(i) Use this data to calculate the increase in temperature of the brick.

(2)

temperature increase = ... °C

(ii) The actual temperature increase will be smaller than you calculated in (i).
Explain why the actual temperature increase will be smaller than the value in (i).

(2)

.....

.....

.....

.....

(Total for question = 4 marks)

Q9.

A beaker contains 0.25 kg of water at room temperature.
The beaker of water is heated until the water reaches boiling point (100 °C).
The specific heat capacity of water is 4200 J/kg °C.
The total amount of thermal energy supplied to the water is 84 000 J.

(i) Calculate the temperature of the water before it was heated.

Use an equation selected from the list of equations at the end of this paper.

(3)

temperature before heating = ... °C

(ii) The heating continues until 0.15 kg of the water has turned into steam.

The thermal energy needed to turn the boiling water into steam is 0.34 MJ.
Calculate the specific latent heat of vapourisation of water.
Use an equation selected from the list of equations at the end of this paper.

(2)

specific latent heat = ... MJ/kg

(iii) The graph in Figure 13 shows how the **volume** of 1 kg of water changes with temperature.

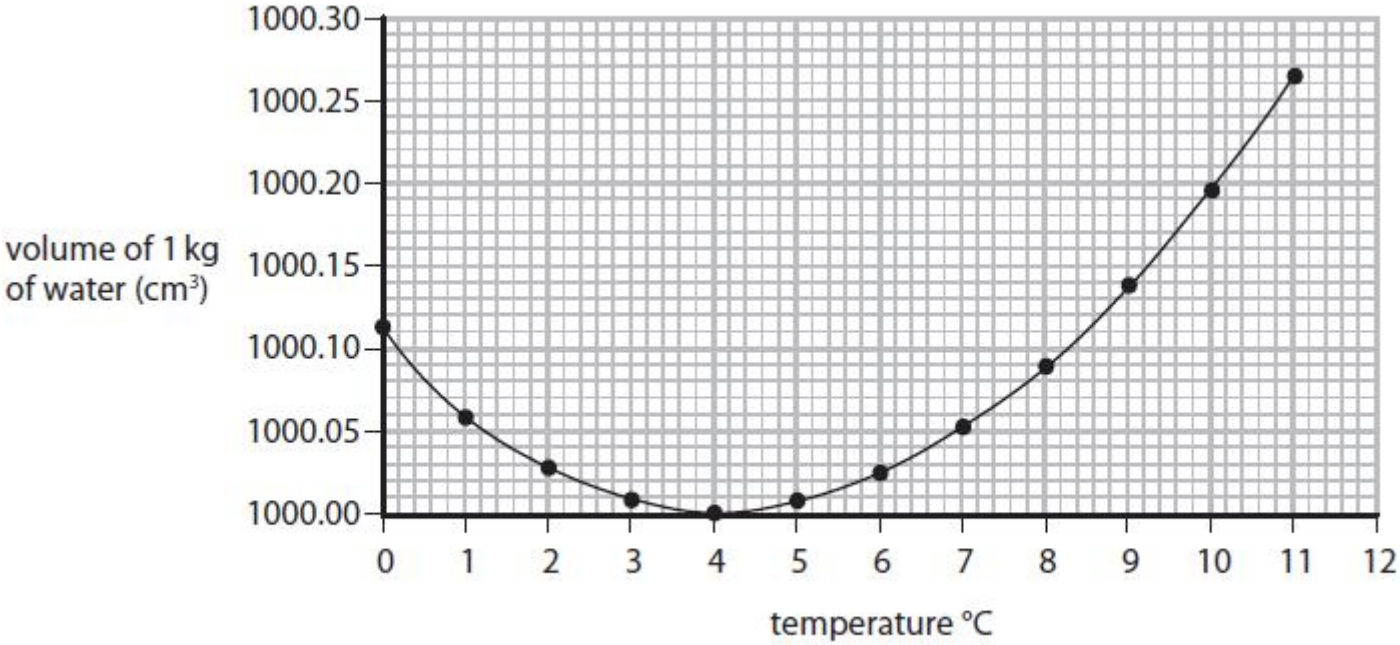

Figure 13

Describe how the **density** of water changes with temperature over the range of temperature shown in Figure 13.
Calculations are not required.

(2)

.....

.....

.....

.....

(Total for question = 7 marks)

Mark Scheme

Q1.

Question Number:	Answer	Additional Guidance	Mark
(i)	a description to include:		(4) AO 1 2
	(measurement of) the mass of water (1)	accept volume / weight of water ignore amount	
	(measurement of) the temperature (rise/change) (1)	accept (take) thermometer reading	
	(measurement of) the energy supplied / from heater (1)	accept (take) reading of the joulemeter ignore 'change in thermal energy' (from equation)	
	detail of any of the above (1)	e.g. measure temp at the start and end or measure mass of empty cup or start and end readings on the meter	

Question Number:	Answer	Additional Guidance	Mark
(ii)	any two improvements from:	both marks can be scored in one answer space ignore repeating readings ignore increase voltage / power / energy ignore use of clamp to hold thermometer / heater	(2) AO 3 3b
	add lid /cover (1)		
	add lagging / insulation (1)	accept use better insulator or better insulated / thicker cup accept use calorimeter ignore use glass beaker unless cup is inside it ignore different type of cup	
	add a stirrer (1) use a more sensitive thermometer (1)	accept use digital / electric thermometer / data logger	
	ensure heater fully submerged (1)		

Q2.

Question Number:	Answer	Additional Guidance	Mark
(i)	at right angles / 90°	perpendicular / normal to the tube wall	(1) AO 1 1

Question Number:	Answer	Additional Guidance	Mark
(ii)	select and substitute into $P_1 \times V_1 = P_2 \times V_2$ (1) $400\ 000 \times V_1 = 100\ 000 \times 4.8$ rearrangement (1) $V_1 = \frac{100\ 000 \times 4.8}{400\ 000}$ evaluation (1) (V_1 =) 1.2 (litres)	substitution and rearrangement in either order award full marks for the correct answer without working POT error 2 marks	**(3)** AO 2 1

Question Number:	Answer	Additional Guidance	Mark
(iii)	an explanation linking: work is done (in compressing the air) (1) increases the **kinetic energy** of the (air) particles / thermal **energy** (of the system) (1)	heat for thermal accept answer in terms of p ΔV W = F x d = p x (A x d) = p ΔV	**(2)** AO 1 1

Q3.

Question Number	Answer	Mark
	C The volume of the air inside the cylinder. **The only correct answer is C** ***A*** *is not correct because the mass remains unchanged* ***B*** *is not correct because the rate of collision decreases* ***D*** *is not correct because the pressure decreases*	**(1)** AO 1 1

Q4.

Question number	Answer	Additional guidance	Mark
(i)	Rearrangement (and substitution) (1) (c) $= \frac{1050}{0.058 \times 78}$ evaluation (1) 230 (J/kg °C)	 $c = \frac{\Delta Q}{m \times \Delta\theta}$ award 1 mark if 78 seen accept 232(J/kg °C) award full marks for correct answer without working.	**(2)**

Question number	Answer	Additional guidance	Mark
(ii)	any two of the following	ignore more accurate measurements e.g. thermometer, balance etc. ignore taking repeats	(2)
	reduce heat loss from water/insulate beaker/add cover (1)		
	make the temperature rise larger/use a larger piece of copper/ use a smaller amount of water (1)	start with colder water	
	(use)a stirrer (1)		
	account for heat gained by glass beaker (1)		
	transfer the hot copper faster (1)		
	use a different heating method (1)		
	measure the temperature of the boiling water (1)		

Q5.

Question number	Answer	Additional guidance	Mark
(i)	substitution (1) $830 = \frac{3.9}{\text{volume}}$ rearrangement and evaluation (1) (volume =) 0.0047 (m^3) **OR ALTERNATIVE METHOD** rearrangement (1) (volume =) $\frac{\text{mass}}{\text{density}}$ substitution and evaluation (1) (volume =) 0.0047 (m^3)	accept values that round to 0.0047; e.g. 0.004699 volume = $\frac{3.9}{830}$ accept values that round to 0.0047; e.g. 0.004699 award full marks for correct answer without working if no other mark scored allow 1 mark for values that round to 0.0042 (use of incorrect density)	**(2)** **AO2**

Question number	Answer	Additional guidance	Mark
(ii)	(the volume will) decrease (1)		**(1)** **AO3**

Question number	Answer	Additional guidance	Mark
(iii)	an explanation linking three from specific heat capacity is (much) less than specific latent heat (1) specific heat capacity is 2.1(kJ/kg °C) and specific latent heat is 190 (kJ/kg) (1) less (thermal) energy is transferred (to surroundings during R to S) (1) (thermal) energy transferred (to surroundings) at similar / constant rate (1)	allow reverse arguments less heat is dissipated	(3) AO3

Q6.

Question number	Answer	Additional guidance	Mark
(i)	933 (1)	do not accept -933 ignore K ignore degrees ignore °	(1) AO2

Question number	Answer	Additional guidance	Mark
(ii)	A description to include any **two** from:		**(2)** **AO1**
	(motion is) random (1)	move freely / move in any direction / move around	
	various {speeds / velocities / kinetic energies} (1)	different speeds range of speeds	
	bump into each other / collide (1)	slide over / past each other / touch each other / in contact with each other	
	fast(er than solid) (1)	more kinetic energy (than in solid) ignore bulk properties of liquids e.g. take shape of container. ignore vibrate "random speeds" on its own scores 1 mark	

Q7.

Question number	Answer	Additional guidance	Mark
(i)	Substitution: Density = mass/ volume (1) = 28 x10^{-3}/ 3.6 x 10^{-6} (1) Evaluation = 7777 kg / m^3 (1)	(recalled / used) ignore any power of ten (pot) error here do not penalise any sf errors (7.77 etc. would get 2 marks: losing the pot mark in the evaluation)	(3)

Question number	Answer	Additional guidance	Mark
(ii)	(Use $\Delta Q = m \times c \times \Delta\theta$) substitution thermal energy gained = 0.028 x 510 x 80 (1) evaluation = 1100 (J) (1)	ignore any pot error here 1142 (J)	(2)

Question number	Answer	Mark
(iii)	An explanation that combines identification – knowledge (2 marks) and reasoning / justification (1 mark) Solid state → particles vibrate (1) → about fixed positions (1) Liquid state → particles move randomly / freely (1)	(3)

Q8.

Question number	Answer	Additional guidance	Mark
i	rearrangement **and** substitution (1) $(\Delta\theta =)\ \frac{210\ (\times 10^3)}{5.8 \times 860}$ evaluation (1) 42 (°C)	$(\Delta\theta =)\ \frac{210\ (\times 10^3)}{4988}$ accept any value which rounds to 42 e.g. 42.10 award full marks for the correct answer without working 4.2 to any other power of 10 scores 1 mark	**(2) AO2.1**

Question number	Answer	Additional guidance	Mark
ii	an explanation linking any **two** from not **all** the energy supplied goes to the brick (1) not all the energy supplied stays in the brick (1) energy transferred to the storage heater parts (1)	ignore: • energy is lost / wasted, unqualified • not 100% efficient • arguments about sound energy accept heat for energy throughout less (thermal) energy given to brick energy transfers from the brick	**(2) AO2.1**

	energy transferred to the surroundings (1) argument linking Δθ to ΔQ **using** $\Delta\theta = \frac{\Delta Q}{m \times c}$ (1)	energy dissipated from the equation, if energy supplied to the block is smaller the change of temperature will be smaller 'brick transfers (thermal) energy to the surroundings' scores 2 marks	

Q9.

Question Number	Answer	Additional guidance	Mark
(i)	substitution into ΔQ = m × c × Δθ (1) 84 000 = 0.25 × 4200 × Δθ rearrangement $\frac{\Delta Q}{m \times c}$ (1) (Δθ =) $\frac{84\,000}{0.25 \times 4200}$ (= 80) evaluation (1) (temperature before heating =) 20 (°C)	accept substitution and rearrangement in either order answer of 80 (°C) scores 2 marks award full marks for the correct answer without working	(3)

Question Number	Answer	Additional guidance	Mark
(ii)	substitution into Q = m × L (1) 0.34 = 0.15 × L re-arrangement and evaluation (1) $(L = \frac{0.34}{0.15} =)$ 2.3 (MJ/kg)	allow values that round to 2.3 (MJ/kg) allow 1 mark for POT error award full marks for the correct answer without working	(2)

Question Number	Answer	Additional guidance	Mark
(iii)	A description that makes reference to any **two** of the following (density) increases between 0°C and 4 °C (1) reaches a maximum at 4 °C (1) (density) decreases above 4 °C (1)	increases initially / at first / up to 4 °C then decreases if no other marks scored then credit reference to large volume means low density (OWTTE) for 1 mark only	(2)