Questions

Q1.

A firework rocket contains a solid fuel inside a cardboard tube.

The burning of the fuel creates a thrust to propel the rocket upwards.

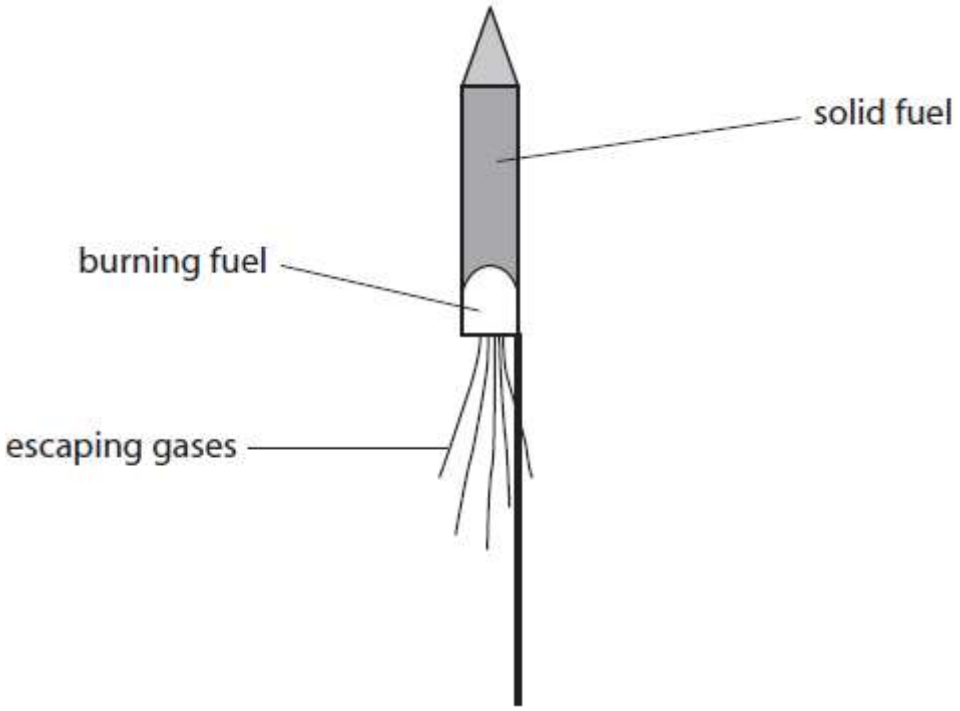

(i) Scientists can refer to several different quantities when describing the motion of the rocket.

mass	energy	speed	force

Only one of these quantities is a vector.
Complete this sentence using **one** of the words from the box.

(1)

The vector quantity is .....

(ii) Before the fuse is lit, the total weight of a rocket including fuel is 0.7N.

The gravitational field strength is 10 N/kg.
Complete the sentence by putting a cross (☒) in the box next to your answer.
The total mass of the rocket including fuel is

(1)

☐ **A** 0.007 kg

☐ **B** 0.07 kg

☐ **C** 0.7 kg

☐ **D** 7 kg

(iii) There is a resultant force on the rocket of 0.5 N upwards when it takes off.

The arrow on the diagram shows the size and direction of the force of gravity acting on the rocket

when it takes off.

Add another arrow to the diagram to show the thrust produced by the burning fuel at the time the rocket takes off.
You should label the arrow with the size of the thrust.

(2)

Q2.

Another rocket has a total mass of 90 g when it takes off. The acceleration of the rocket when it takes off is 3.3 m/s^2.

(i) Calculate the resultant force on the rocket when it takes off.

(2)

resultant force = ... N

*(ii) The rocket contains 50 g of fuel when it takes off.
The fuel burns and the rocket rises vertically.
After a while, there is no fuel left.
Eventually the empty rocket falls back to the ground.

The graph is a velocity–time graph for the rocket.
Four stages are labelled on the graph.

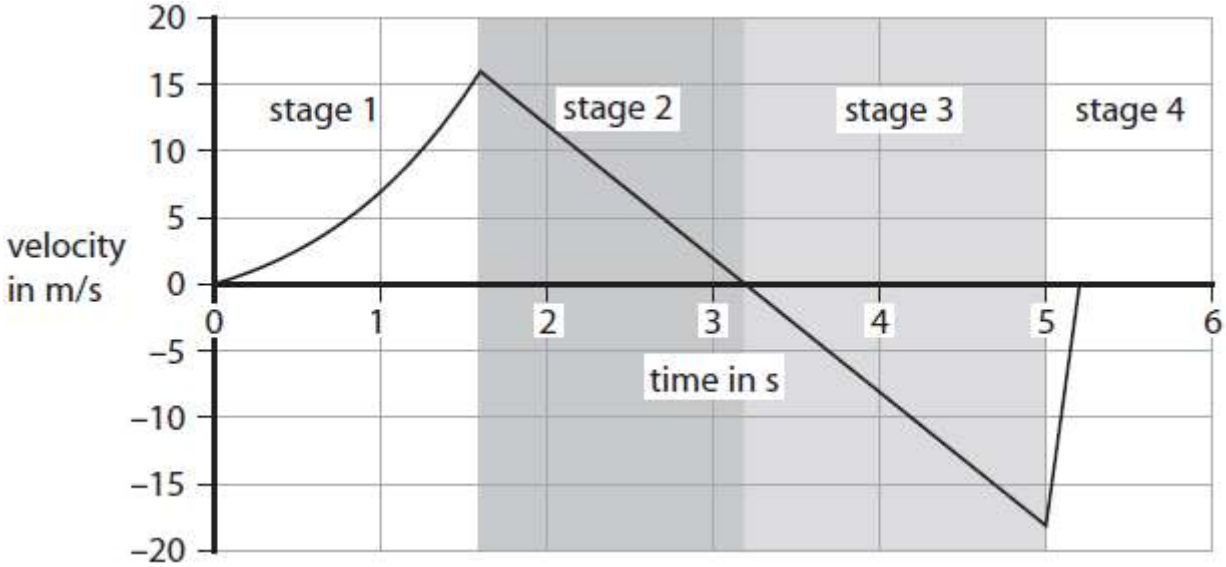

Explain why the velocity of the rocket changes as shown in the graph.

(6)

.....

.....

.....

.....

.....

.....

.....

.....

.....

.....

.....

.....

.....

.....

.....

Q3.

Which row of the table is correct for both force and velocity?

(1)

	force	velocity
☐ A	scalar	scalar
☐ B	scalar	vector
☐ C	vector	scalar
☐ D	vector	vector

(Total for question = 1 mark)

Q4.

A student investigates the motion of a trolley along a horizontal runway.

Figure 9 shows the apparatus.

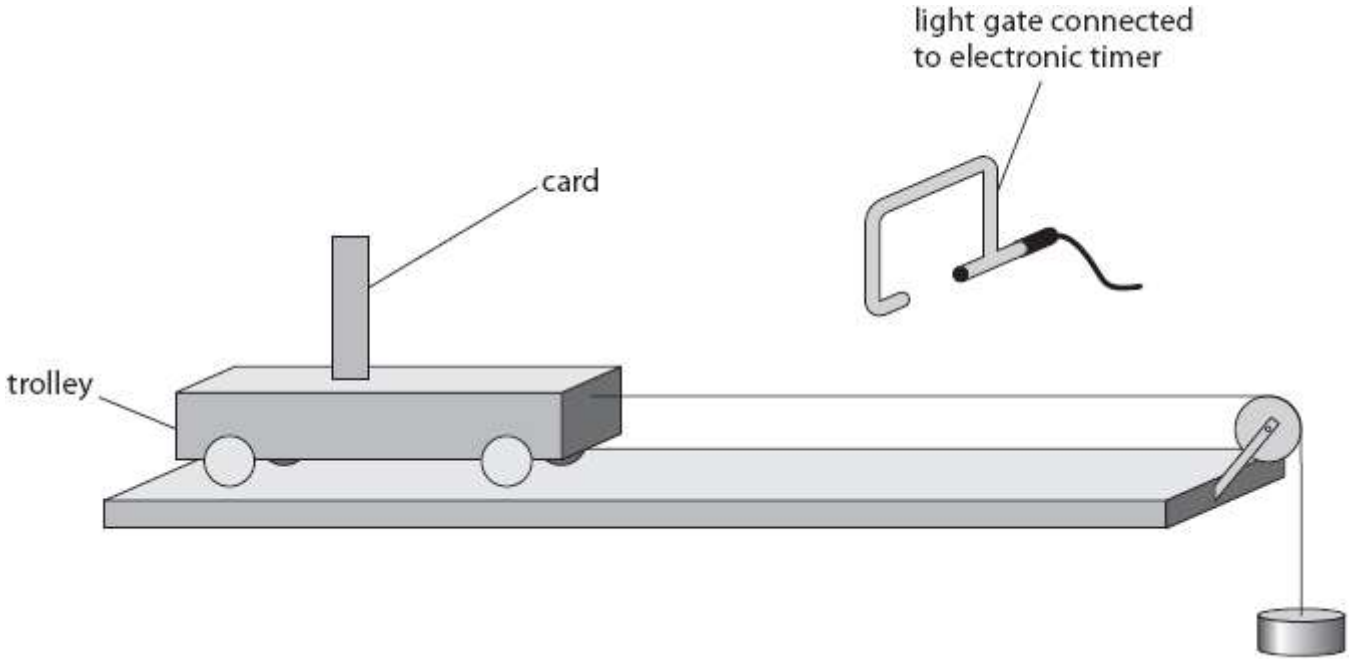

Figure 9

The trolley is attached to a string passing over a pulley.

A 100 g metal disc hangs on the end of the string.

The light gate measures the time it takes for the card to pass through it.

When the trolley is released, it accelerates along the track.

(i) Explain why the trolley accelerates along the track.

(2)

.....

.....

.....

.....

(ii) The card takes 0.040 s to travel through the light gate.

The student calculates that the average speed of the trolley through the light gate is 1.15 m/s.
Calculate the width of the card.

(2)

width = ... cm

(iii) The trolley travels 1.2 m along the track from the start before the card reaches the light gate.

Show that acceleration of the trolley along this distance is approximately 0.55 m/s^2.

(2)

(Total for question = 6 marks)

Q5.

Figure 15 shows a system consisting of two toy trolleys, **S** and **T**, on a straight, horizontal track.

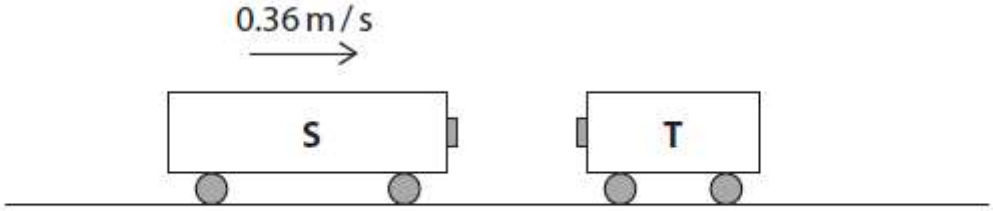

Figure 15

T is not moving.

S is moving with a velocity of 0.36 m / s towards **T**.

S collides with **T**.

The trolleys stick together and move off together.

With reference to the momentum of the system, explain why the velocity of the trolleys after the collision is less than the velocity of **S** before the collision.

(3)

.....

.....

.....

.....

.....

.....

.....

.....

(Total for question = 3 marks)

Q6.

Figure 5 is a speed limit sign from a European motorway.

The speeds shown are in km/h (kilometres per hour).

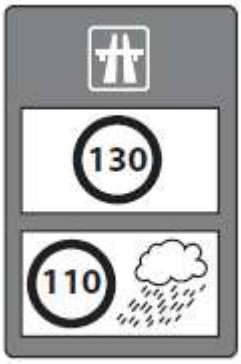

Figure 5

(i) The sign tells drivers to drive at a slower speed in wet weather.

Explain why it is safer for drivers to drive at a slower speed in wet weather.

(2)

.....

.....

.....

.....

(ii) Show that a speed of 31 m/s is less than a speed of 130 km/h.

(2)

(iii)

The driver's reaction time is the time between the driver seeing an emergency and starting to brake.

A car is travelling at a speed of 31 m/s.

The car travels 46 m between the driver seeing an emergency and starting to brake.

Calculate the driver's reaction time.

Give your answer to 2 significant figures.

(3)

driver's reaction time ..... s

(Total for question = 7 marks)

Q7.

Figure 10 shows a small steel ball held at a height, *h*, above the ground.

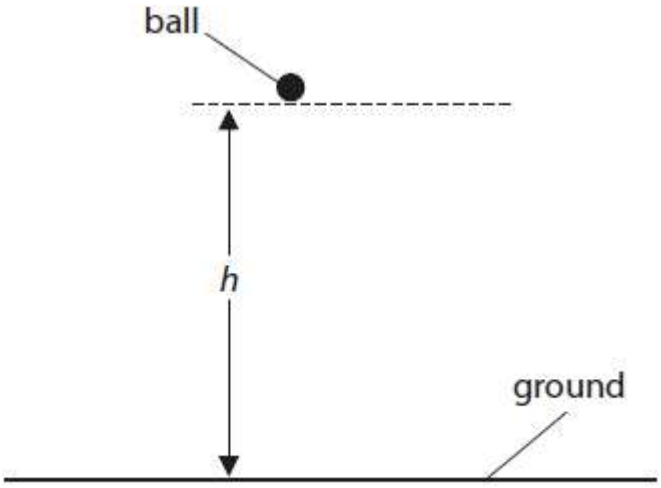

Figure 10

Two students use the arrangement shown in Figure 10.

They use a stopwatch to time the ball falling through the height of 1.4 m.

The students repeat the measurement many times, but their average value for *t* is different from the calculated value.

(i) Suggest a reason why the students' value for *t* is different from the calculated value.

(1)

.....

.....

(ii) Suggest **one** improvement the students could make to their procedure so that their value for *t* is closer to the calculated value.

(1)

.....

.....

(Total for question = 2 marks)

Q8.

Figure 9 shows a rocket soon after it takes off from the ground.

(Source: © Alones/Shutterstock)

Figure 9

The force that the rocket engines produce remains constant during the first few seconds after take-off.

Explain what happens to the acceleration during the first few seconds.

(3)

.....

.....

.....

.....

.....

.....

(Total for question = 3 marks)

Q9.

Answer the question with a cross in the box you think is correct (☒). If you change your mind about an answer, put a line through the box (☒) and then mark your new answer with a cross (☒).

Figure 13 shows a ball being rotated in a horizontal circle.

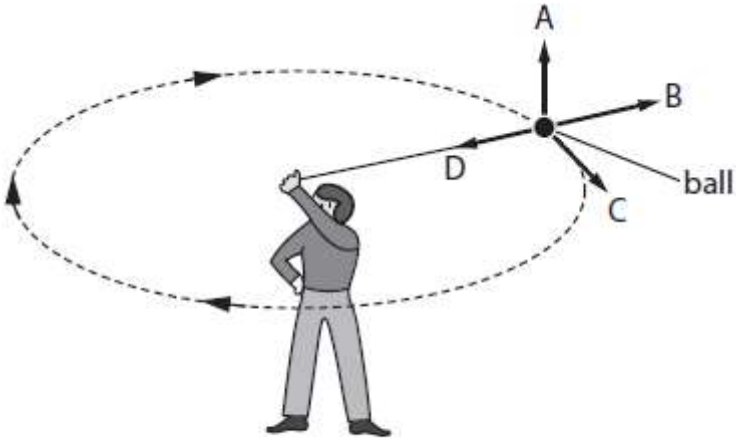

Figure 13

(i) Which arrow in Figure 13 shows the direction of the centripetal force on the ball?

(1)

☐ **A**
☐ **B**
☐ **C**
☐ **D**

(ii) The ball is moving at constant speed. Give **one** reason why the velocity of the ball is continuously changing.

(1)

.....

.....

(Total for question = 2 marks)

Q10.

Answer the question with a cross in the box you think is correct ☒. If you change your mind about an answer, put a line through the box ☒ and then mark your new answer with a cross ☒.

Figure 12 is a diagram showing a rocket that is sent into space to try and change the path of a small asteroid.

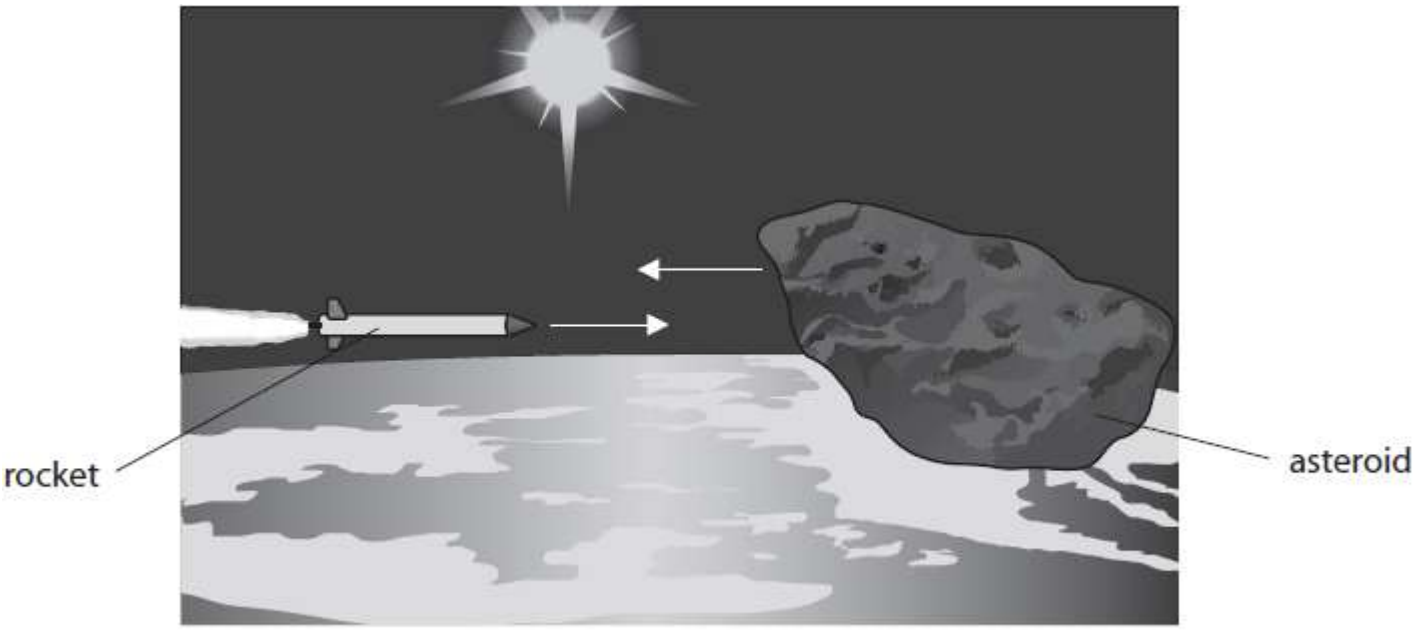

Figure 12

(i) The rocket has a mass of 5.5×10^5 kg and is travelling to the right at 14 km / s.

Which of these is a correct calculation of the momentum of the rocket in kg m / s?
Use the equation

$$p = m \times v$$

(1)

- ☐ **A** 7.7×10^3 kg m / s
- ☐ **B** 7.7×10^6 kg m / s
- ☐ **C** 7.7×10^9 kg m / s
- ☐ **D** 7.7×10^{12} kg m / s

(ii) The asteroid has a momentum of 7.5×10^{10} kg m / s and a mass of 8.0×10^6 kg.

Calculate the speed of the asteroid.

(2)

speed of the asteroid = ... m / s

(Total for question = 3 marks)

Q11.

Answer the question with a cross in the box you think is correct ☒. If you change your mind about an answer, put a line through the box ☒ and then mark your new answer with a cross ☒.

The work done to bring a car to rest is given by the equation

work done = braking force × braking distance

Which of these graphs is correct for the car if a constant braking force is applied?

(1)

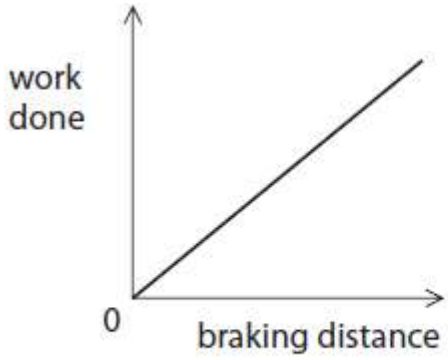

☐ **A**

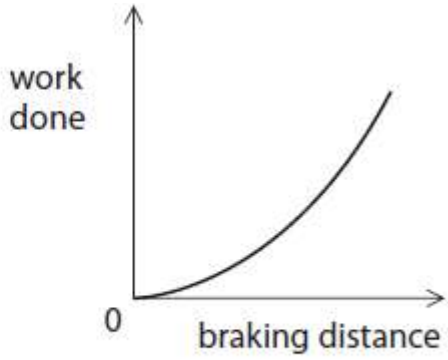

☐ **B**

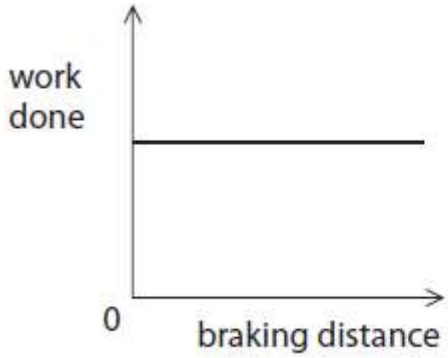

☐ **C**

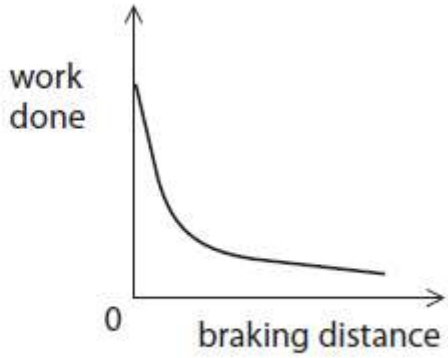

☐ **D**

(Total for question = 1 mark)

Mark Scheme

Q1.

Question Number	Answer	Acceptable answers	Mark
(i)	force (1)	If than one word given then 0 marks.	**(1)**

Question Number	Answer	Acceptable answers	Mark
(ii)	B 0.07kg		**(1)**

Question Number	Answer	Acceptable answers	Mark
(iii)	Arrow pointing (vertically) upwards (1) Value of 1.2 (N) (written near to arrow) (1)	Marks are independent of each other	**(2)**

Q2.

Question Number	Answer	Acceptable answers	Mark
(i)	Substitution $\frac{90}{1000} \times 3.3$ (1) evaluation 0.30 (N) (1)	A value which rounds to 0.30 eg 0.297 Give full marks for correct answer with no working Ignore power of ten error until evaluation Allow 1 mark for 297 even with no working shown	**(2)**

Question Number		Indicative Content	Mark
QWC	***(ii)**	An explanation demonstrating some of the following: Descriptions of the graph • Accelerates upwards during stage1 • Maximum velocity is reached at the end of stage 1 • Accelerates downwards / decelerates during stage 2 • Accelerates during stage 3 • Comes to rest during stage 4. Interpretations of the shape of the graph • Fuel is burnt creating thrust in stage • Thrust is upwards in stage 1/ • Gravity/weight (is always) a downward force • Fuel runs out at end of stage 1/ has ran out by stage 2 • Still going up during/ max height at end of stage 2 • Starts to fall at start of stage 3 • Negative velocity during stage 3 because it is falling. • Rapid deceleration / collision with the ground during stage 4/end of stage 3 Explanations for changes in velocity • Resultant force upwards/ thrust greater than gravity force during stage 1 • Acceleration non-linear because mass is decreasing / resultant force is increasing • Linear deceleration in stage 2/3 because force of gravity is constant • Resultant downward force/only gravity/ weight is acting during stage 2 and 3 • Large resultant force of impact during stage 4	**(6)**

Level	0	No rewardable content
1	1 - 2	• A limited explanation involving descriptions of the graph. • E.g. The rocket gets faster as it goes up during stage 1. The rocket slows down during stage 2 • the answer communicates ideas using simple language and uses limited scientific terminology • spelling, punctuation and grammar are used with limited accuracy
2	3 - 4	• A simple explanation involving interpretations of the shape of the graph e.g. The rocket's velocity increases during stage 1 because the burning fuel provides a force. The rocket accelerates downwards during stage 3 • the answer communicates ideas showing some evidence of clarity and organisation and uses scientific terminology appropriately • spelling, punctuation and grammar are used with some accuracy
3	5 - 6	• A detailed explanation which includes descriptions and interpretations for the shape of the graph including an explanation. E.g. The rocket's acceleration during stage 1 is increasing because it is losing mass as the fuel is burnt. It then slows down until it reaches maximum height at the end of stage 2 • the answer communicates ideas clearly and coherently uses a range of scientific terminology accurately • spelling, punctuation and grammar are used with few errors

Q3.

Question Number	Answer	Mark
	D | vector | vector **is the only correct answer** ***A*** *'scalar scalar' is incorrect, both force and velocity are vectors* ***B*** *'scalar vector' is incorrect, with force being described incorrectly as a scalar* ***C*** *'vector scalar' is incorrect, with velocity being described incorrectly as a scalar*	**(1)** AO 1 1

Q4.

Question number	Answer	Additional guidance	Mark
(i)	An explanation that combines identification - knowledge (1 mark) and reasoning/justification - understanding (1 mark): • unbalanced / resultant force (1) • (provided by) tension in the string / (weight of) metal disc (1)		(2)

Question number	Answer	Additional guidance	Mark
(ii)	substitution into speed = d/t (1) 1.15 = d / 0.04 (1) evaluation (1) d = 0.046m = 4.6 cm (1)	full marks will be awarded for correct numerical answer without working	(2)

Question number	Answer	Additional guidance	Mark
(iii)	using $V^2 - u^2 = 2ax$ $V^2 = 1.15^2$ $= 1.3225$ (1) $2 \times a \times x = 2 \times 1.2 \times 0.55$ $= 1.32$ (1)	allow 1.3225	(2)

Q5.

Question number	Answer	Additional guidance	Mark
	explanation linking (total) momentum of the system is constant (1) (therefore as) momentum = mass x velocity (1) (and) more mass (is moving after collision) (1)	 momentum before collision = momentum after collision momentum is conserved / stays the same p = mv	(3) AO1.1

Q6.

	Answer	Additional guidance	Mark
(i)	an explanation linking **two** from: (wet road means) less / no friction (between tyres and road) (1) (wet weather means) increased stopping distance (1) (slower speed means) shorter braking / stopping distance (1) (dry weather / slower speed) reduces possibility of skidding / sliding / idea of losing control / crashing (1)	accept reverse arguments throughout accept (road) more slippery / less grip accept idea of reduced visibility accept braking or thinking distance in this context accept takes longer to slow down / stop ignore harder to brake	(2) AO1

	Answer	Additional guidance	Mark
(ii)	convert **either** distance or time (1) (31 m =) $\frac{31}{1000}$ (km) or 0.031 (km) **OR** (1 s =) $\frac{1}{3600}$ (h) = $\frac{1}{60 \times 60}$ (h) or 0.000 28 (h) evaluation (1) (31 m/s =) 110 (km/h)	 (130 km =) 130 × 1000 (m) or 130 000 (m) **OR** (1 h =) 60 x 60 (s) or 3600 (s) (130 km/h =) 36(.1) (m/s) accept 111.6 or 112 (km/h) for 2 marks if no other marks awarded accept <u>1860 m/min</u> and <u>2167 m/min</u> for 1 mark each award full marks for the correct answer without working	**(2)** **AO2**

	Answer	Additional guidance	Mark
(iii)	select and substitute into distance travelled = average speed x time (1) 46 = 31 x t rearrangement and evaluation (1) (t=) 1.48(3) (s) evaluation given to 2 sf (1) (t =) 1.5 (s)	 $31 = \frac{46}{t}$ $(t =) \frac{46}{31}$ award two marks for the correct evaluation without working any answer written to 2 sf independent mark 1.5 scores 3 marks 1.4 scores 2 marks 1.50 scores 2 marks 0.67 scores 2 marks 1400 scores 2 marks 0.673(9) scores 1 mark 1426 scores 1 mark	**(3)** **AO2**

Q7.

Question number	Answer	Additional guidance	Mark
(i) CS5	(students') reaction time (is significant compared with recorded time) (1)	g is really 9.8	**(1)** **AO2**

Question number	Answer	Additional guidance	Mark
(ii) CS5	**One** from use light gates (1) use automatic timer (1) Use time lapse/ stroboscopic photography (1) drop from greater height (1)	ignore repeats or more people	(1) AO3

Q8.

Question number	Answer	Additional guidance	Mark
CS4	An explanation linking three of: acceleration increases (1) as F = ma (1) (and) mass decreases (1) due to burning/using fuel (1)	independent mark	(3) AO1

Q9.

Question	Answer	Mark
(i)	**D** **A** is not correct there is no vertical force **B** the centripetal force acts inward **C** is not correct there is no force acting at right angles to the radius	**1** **AO1.1**

Question	Answer	Additional guidance	Mark
(ii)	any **one** from:- direction (of ball is) (continuously) changing (1) there is a resultant force acting on the ball (1) velocity/it is a vector (1)	ignore changing force /acceleration / centripetal force velocity/it has direction	**1** **AO1.1**

Q10.

Question number	Answer	Additional guidance	Mark
(i)	C 7.7×10^9 kg m/s Only one correct power of 10. The other answers are all distractors involving students misappropriating 'kilos' in some way, either in kilograms or form kilometres		**(1)** **comp**

Question number	Answer	Additional guidance	Mark
(ii)	rearrangement and substitution (1) $v = \frac{\text{momentum change}}{\text{mass}}$ $= \frac{7.5\ (\times 10^{10})}{8(.0)\ (\times 10^{6})}$ evaluation (1) 9.4×10^{3} / number that rounds to 9.4×10^{3} (m/s)	$v = \frac{p}{m}$ e.g. 9375, 9.375×10^{3} 9400 (m/s) 9.4 km / s award full marks for the correct answer without working award 1 mark for 9.4 to any other power of 10	**(2) exp**

Q11.

Question Number	Answer	Mark
	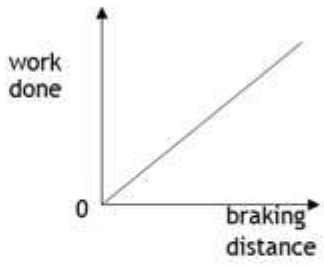 ☒ A **The only correct answer is A (showing direct proportionality)** **B** is not correct – curve (not showing direct proportionality) **C** is not correct – constant value shown (not showing direct proportionality) **D** is not correct – curve (not showing direct proportionality)	**(1)**