Questions

Q1.

Explain **one** way the students could improve their procedure to obtain a more accurate value for *g*.

(2)

.....

.....

.....

.....

(Total for question = 2 marks)

Q2.

A student investigates the effect of a crumple zone on the force exerted during a collision.

The student has one trolley with a spring at the front and another trolley without a spring.

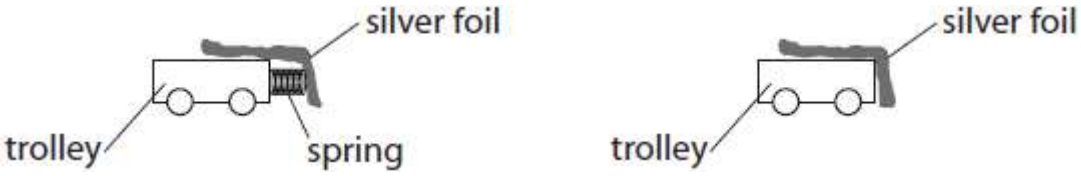

The student uses the arrangement in Figure 13.

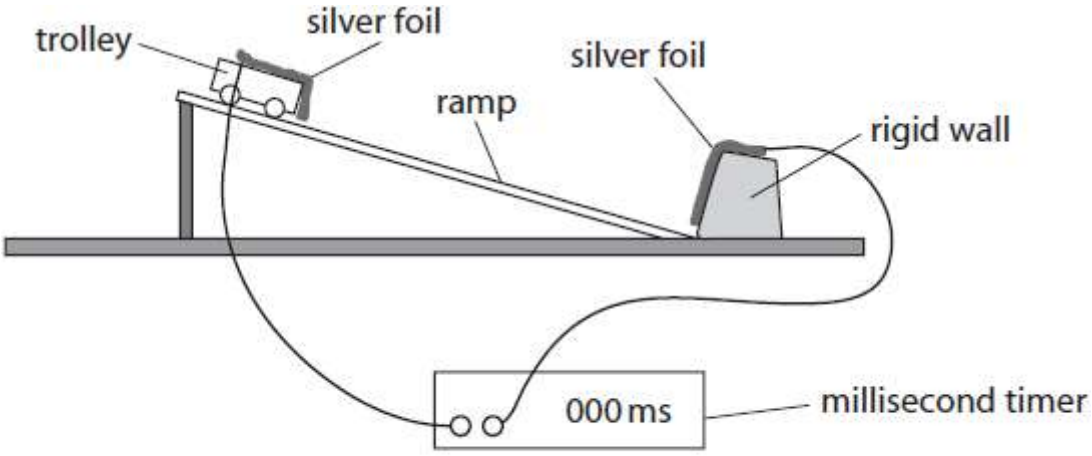

Figure 13

After a trolley is released, it accelerates down a slope and bounces off a rigid wall.

The speed of a trolley can be measured just before a collision with the wall and just after a collision with the wall.

The silver foils are connected to a millisecond timer.

The silver foils make contact with each other during the collision, so the time they are in contact can be read from the millisecond timer.

Explain how the student could investigate the effect of a crumple zone on the average force exerted during the collision.

Your explanation should include:

- how to determine the force (you may wish to refer to an equation from the list of equations at the end of this paper)
- how the effect of crumple zones may be shown in the investigation
- precautions that may be necessary to achieve accurate results. **(6)**

.....

.....

.....

.....

.....

.....

.....

.....

.....

.....

.....

.....

.....

.....

.....

.....

.....

.....

.....

.....

.....

.....

.....

.....

.....

.....

(Total for question = 6 marks)

Q3.

Answer the question with a cross in the box you think is correct ☒. If you change your mind about an answer, put a line through the box ☒ and then mark your new answer with a cross ☒.

(1)

- ☐ **A** energy
- ☐ **B** force
- ☐ **C** mass
- ☐ **D** work

(Total for question = 1 mark)

Q4.

Answer the question with a cross in the box you think is correct ☒. If you change your mind about an answer, put a line through the box ☒ and then mark your new answer with a cross ☒.

Which of these is a scalar quantity?

(1)

- ☐ **A** acceleration
- ☐ **B** distance
- ☐ **C** force
- ☐ **D** weight

(Total for question = 1 mark)

Q5.

Answer the question with a cross in the box you think is correct ☒. If you change your mind about an answer, put a line through the box ☒ and then mark your new answer with a cross ☒.

Figure 8 is a velocity/time graph for a lift moving upwards in a tall building.

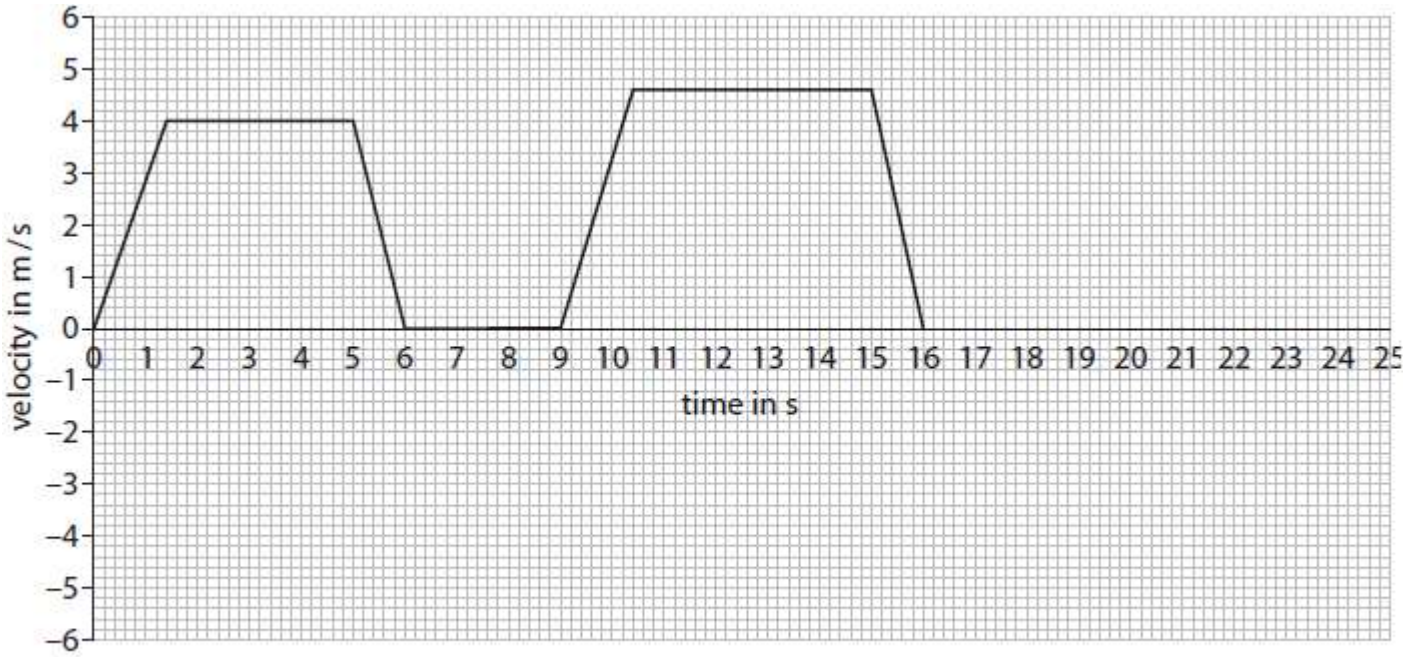

Figure 8

For what length of time is the lift at rest during the first 16 s?

(1)

☐ **A** 1.4 s
☐ **B** 3.0 s
☐ **C** 3.6 s
☐ **D** 4.0 s

(Total for question = 1 mark)

Q6.

Answer the question with a cross in the box you think is correct ☒ . If you change your mind about an answer, put a line through the box ☒ and then mark your new answer with a cross ☒ .

Which of these graphs represents an object moving with a constant velocity of 2 m/s?

(1)

☐ **A**

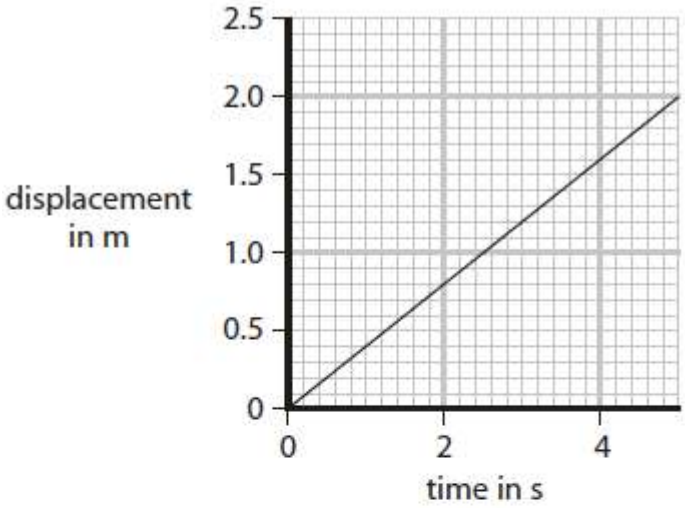

☐ **B**

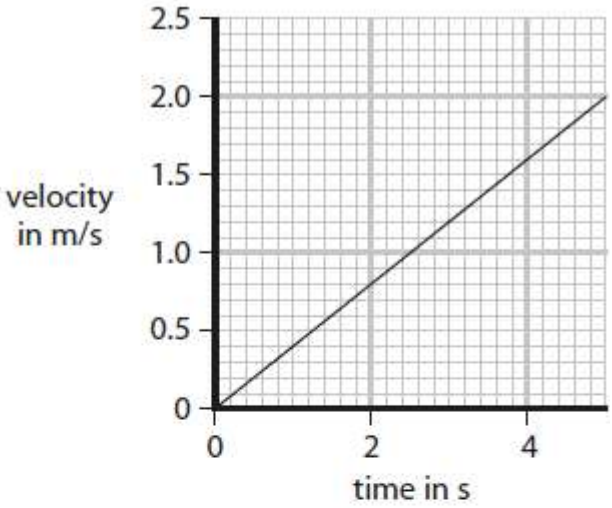

☐ **C**

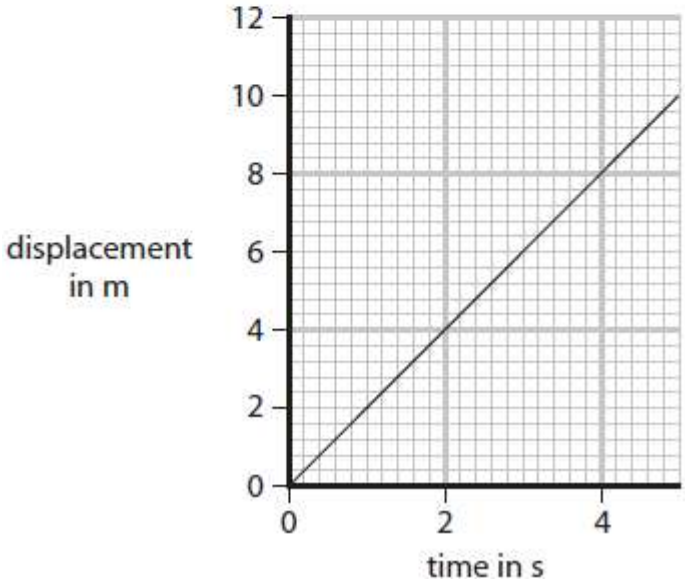

☐ **D**

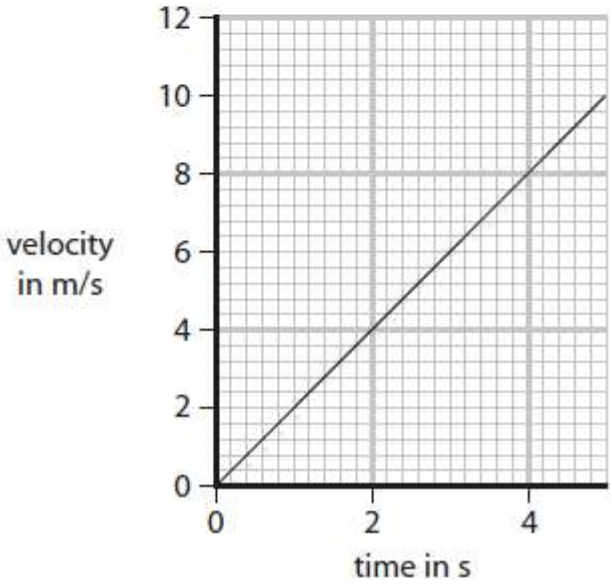

(Total for question = 1 mark)

Q7.

Two students try to determine a value for *g*, the acceleration due to gravity.

(i) They measure the time, *t*, for a small steel ball to fall through a height, *h*, from rest.

They measure *t* to be 0.74 s, using a stopwatch.
They measure *h* to be 2.50 m, using a metre rule.
Calculate a value for *g* from the students' measurements.
Use the equation

$$g = \frac{2h}{t^2}$$

(2)

g = ... m/s^2

(ii) They record the time t for two more drops from the same height.

The three values for time t are

0.74 s, 0.69 s, 0.81 s.

Calculate the average value of time t to an appropriate number of significant figures.

(2)

average value of time t = ... s

(Total for question = 4 marks)

Q8.

Some students investigate a model of the craters produced by meteorite impacts.

They drop balls into a tray filled with sand.

They use six balls with different masses.

They drop each ball from the same height.

(a) (i) Which one of these graphs shows the relationship between the gravitational potential energy (gpe) of the balls and their mass when they are all at the same height?

Put a cross (☒) in the box next to your answer.

(1)

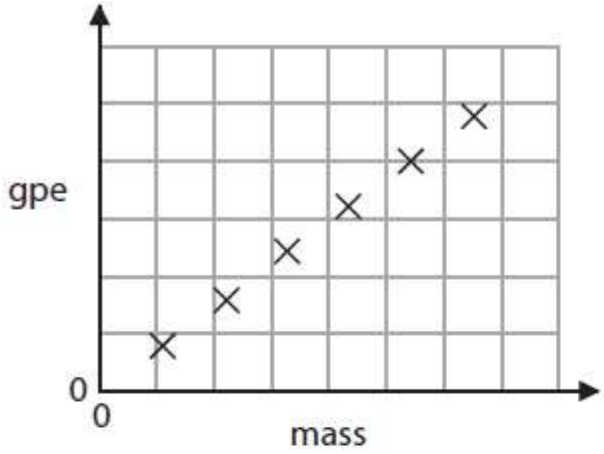

☐ **A**

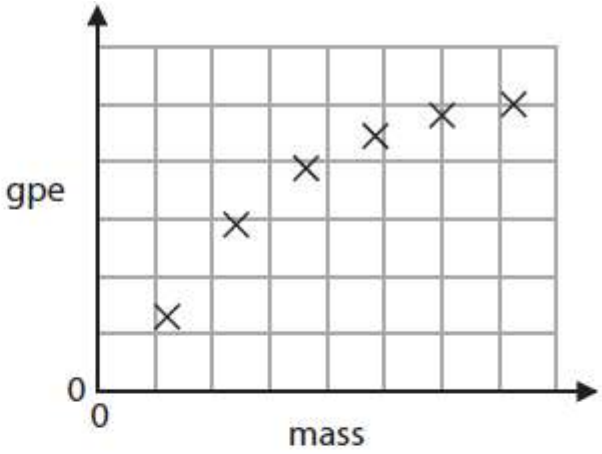

☐ **B**

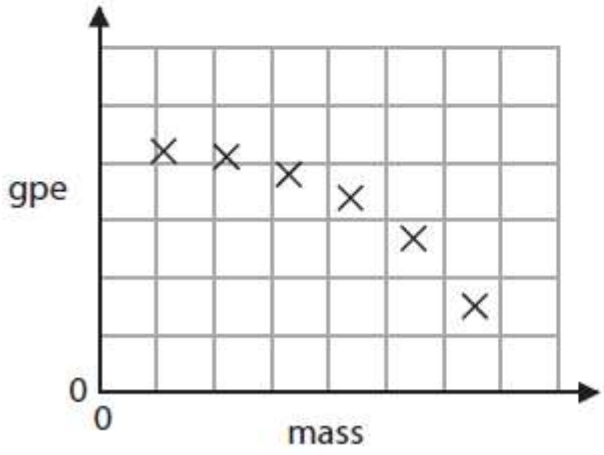

☐ **C**

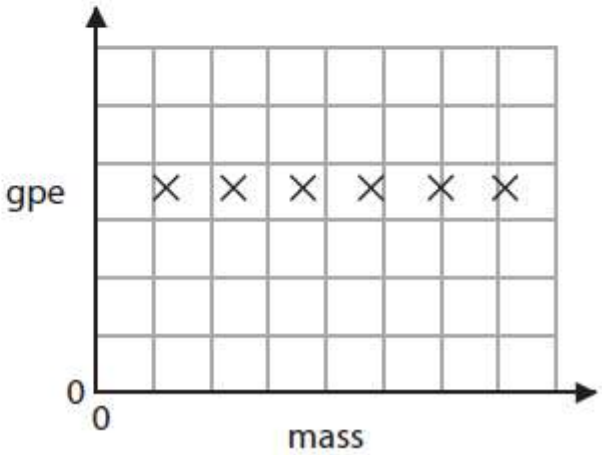

☐ **D**

(ii) Describe how the energy of a ball changes as it drops towards the sand.

(2)

.....

.....

.....

.....

(b) This photograph shows the sand after several balls have hit it.

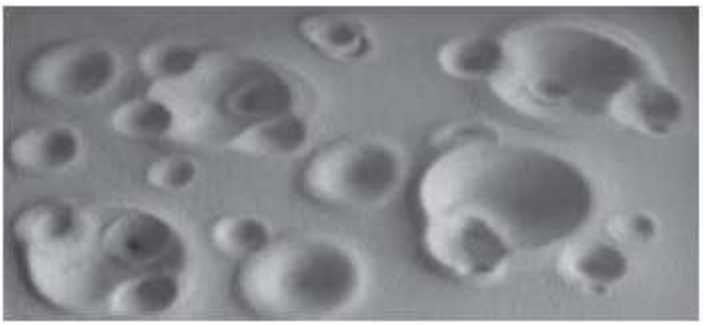

The students read this information in a textbook:

'When work is done, energy is transferred.'

Explain how work is done when the balls impact on the sand.

(2)

.....

.....

.....

.....

(c) When one ball hits the sand, it has a velocity of 6.2 m/s.

It has a momentum of 0.46 kg m/s.

(i) Calculate the mass of the ball.

(3)

mass of ball = ... kg

(ii) The ball takes 0.17 s to come to rest after it hits the sand.
Calculate the average impact force.

(2)

average impact force = ... N

Q9.

A student investigates the motion of a trolley along a horizontal runway.

Figure 9 shows the apparatus.

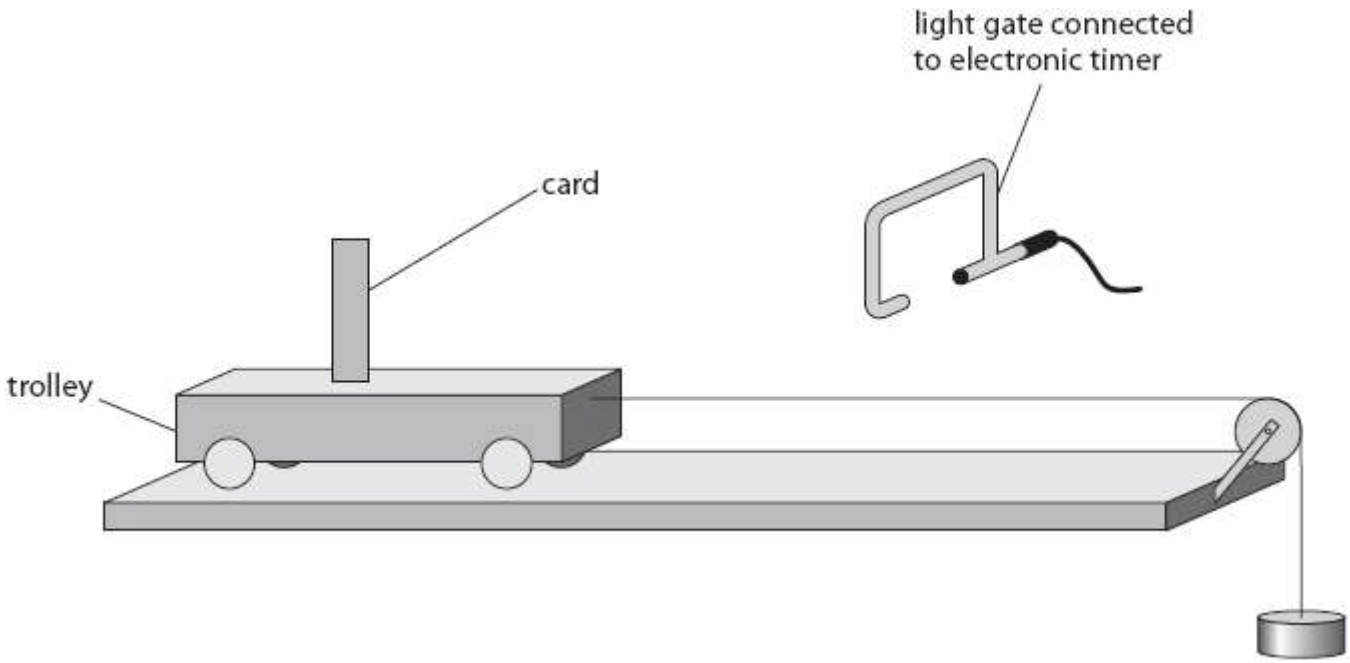

Figure 9

The trolley is attached to a string passing over a pulley.

A 100 g metal disc hangs on the end of the string.

The light gate measures the time it takes for the card to pass through it.

The student repeats the process several times by adding extra 100 g metal discs.

Figure 10 shows a graph of the results.

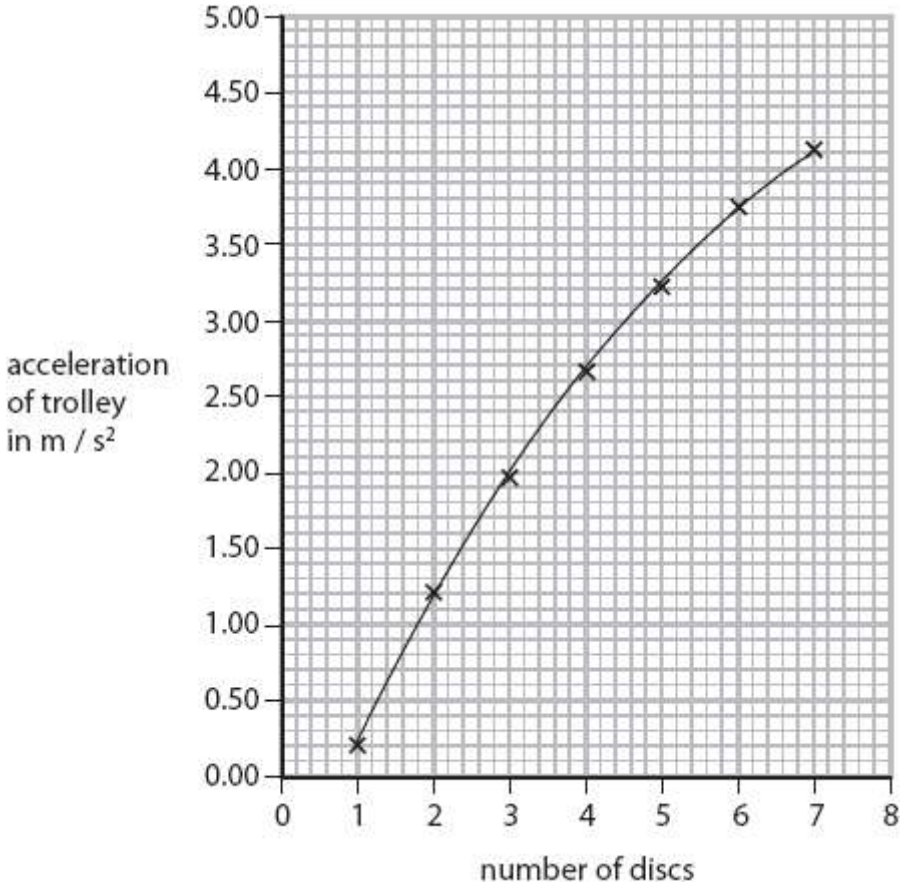

Figure 10

(i) Predict the acceleration if discs with a total mass of 800 g are used.

(1)

acceleration = ... m/s^2

(ii) There are frictional forces in the system.

Identify a feature of the graph that shows there are frictional forces in the system.

(1)

.....

.....

(iii) Explain how the investigation could be developed to remove the effects of friction.

(2)

.....

.....

.....

.....

(Total for question = 4 marks)

Q10.

A student investigates the relationship between force and acceleration for a trolley on a runway.

Figure 12 shows some of the apparatus the student uses.

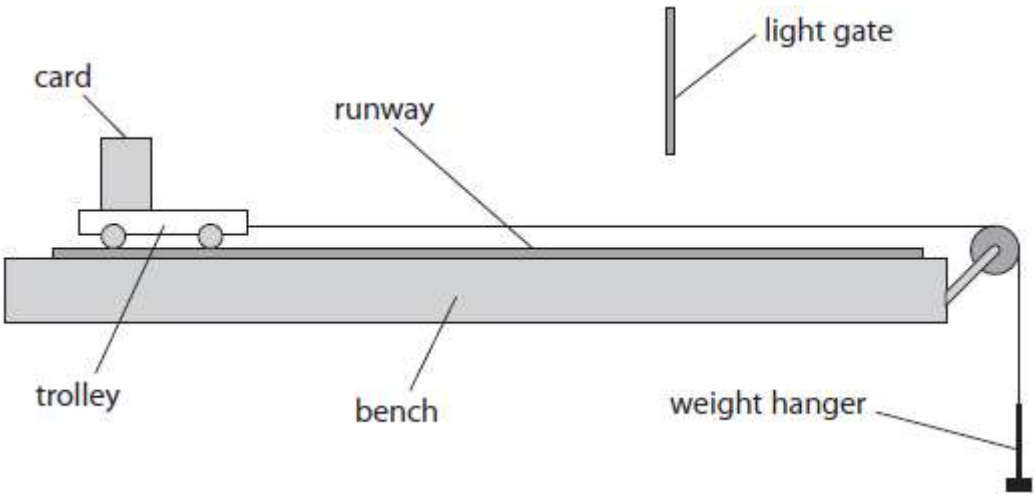

Figure 12

(i) Describe how the student could increase the accelerating force applied to the trolley.

(2)

.....

.....

.....

.....

(ii) Describe how the mass of the moving system can be kept constant.

(2)

.....

.....

.....

.....

(iii) Explain how the student could improve the procedure to compensate for the effects of frictional forces acting on the trolley.

(2)

.....

.....

.....

.....

(Total for question = 6 marks)

Q11.

The earthquake causes seismic waves.

(i) S waves are one type of seismic wave. They travel at 0.65 km/s.
There is a seismometer 80 km away from point E.
Show that it takes about 2 minutes for the S waves from the earthquake to reach the seismometer.

(2)

(ii) P waves are another type of seismic wave.
They travel about 10 times more quickly than S waves.

Describe how scientists can use seismometer records of P and S waves to locate the epicentre.

(3)

.....

.....

.....

.....

.....

.....

.....

(iii) Seismic waves have a frequency of about 15 Hz.
P waves have a much smaller amplitude than S waves.

Some people claim that animals can detect an earthquake before people are aware of it.
Suggest an explanation for this.

(2)

.....

.....

.....

.....

Mark Scheme

Q1.

Question Number	Answer	Additional guidance	Mark
	an explanation linking:		**(2)** AO 3 3b
	use an electronic timer / (1)	light gate/ data logger	
	to eliminate reaction time (1)	there are other options which should be judged to this pattern (e.g. increase distance to reduce effect of reaction time)	

Q2.

Question number	Indicative content	Mark
	Answers will be credited according to candidate's deployment of knowledge and understanding of the material in relation to the qualities and skills outlined in the generic mark scheme. The indicative content below is not prescriptive and candidates are not required to include all the material which is indicated as relevant. Additional content included in the response must be scientific and relevant. **AO2 (strand 2) (6 marks)** <u>Determining force</u> • Use of F = (mv - mu)/t or F =ma • mass (of trolley(s)) needed • and times during impact (t) <u>Showing effect of crumple zone</u> • experiment repeated with and without the spring • (note) difference in contact times • use of spring as crumple zone • with spring, time for contact greater, less impact force <u>Precautions or controls</u> • times repeated and average taken • careful controls – same starting position / same angle of slope / release without pushing etc.	**(6)Exp**

Level	Mark	Descriptor
	0	• No awardable content
Level 1	1-2	• The explanation attempts to link and apply knowledge and understanding of scientific enquiry, techniques and procedures, flawed or simplistic connections made between elements in the context of the question. • Lines of reasoning are unsupported or unclear. (AO2)
Level 2	3-4	• The explanation is mostly supported through linkage and application of knowledge and understanding of scientific enquiry, techniques and procedures, some logical connections made between elements in the context of the question. • Lines of reasoning mostly supported through the application of relevant evidence. (AO2)
Level 3	5-6	• The explanation is supported throughout by linkage and application of knowledge and understanding of scientific enquiry, techniques and procedures, logical connections made between elements in the context of the question. • Lines of reasoning are supported by sustained application of relevant evidence. (AO2)

SUMMARY, for guidance			
Level	**Mark**	**Additional Guidance**	**General additional guidance – the decision within levels** e.g. - At each level, as well as content, the scientific coherency of what is stated will help place the answer at the top, or the bottom, of that level.
	0	No rewardable material.	
Level 1	1–2	Additional guidance Elements of physics present i.e. isolated knowledge of techniques and procedures – **two** unconnected statements from any section	Possible candidate responses Use F = (mv - mu)/t Use F = ma keep slope the same repeat and average use spring as crumple zone
Level 2	3–4	Additional guidance Some knowledge of techniques and procedures with a logical connection made in one section and statement from one more section	Possible candidate responses Measurements (difference in contact times) with and without the spring Use F = ma in finding the force
Level 3	5–6	Additional guidance Detailed knowledge of techniques and procedures with logical connections made in two sections and statement from one more section	Possible candidate responses Measure the trolley mass(es)/ velocities/ impact time(s) and use F = ma in finding the force Measurements (difference in contact times) with and without the spring Same starting place for trolley each time.

Q3.

Question number	Answer	Mark
	☒ **B** force Options A, C and D are all scalars.	(1)

Q4.

Question Number	Answer	Additional guidance	Mark
	B distance **A, C** and **D** are incorrect as these are vector quantities		(1) AO1

Q5.

	Answer Additional guidance	Mark
	B 3.0 s **A, C** and **D** are incorrect as they are the wrong time.	(1) AO3

Q6.

Question number	Answer	Mark
CS4	[x] **C** 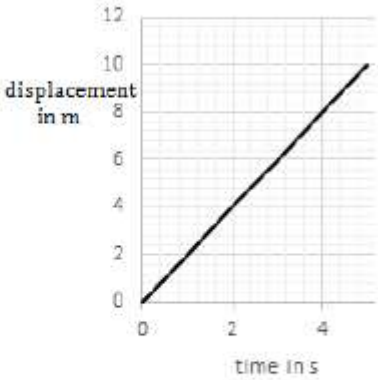 A is not correct because it shows a constant velocity of 0.4 m/s B and D are not correct because they show constant acceleration.	**(1)** **AO3**

Q7.

Question Number	Answer	Additional guidance	Mark
(i)	substitution (1) $\frac{2 \times 2.5}{0.74^2}$ evaluation (1) 9.1(3) (m/s^2)	$\frac{5}{0.5476}$ award full marks for the correct answer with no working	**(2)** AO 2 1

Question Number	Answer	Additional guidance	Mark
(ii)	(0.74 + 0.69 + 0.81) ÷ 3 (1) 0.7(5) (1)	accept 0.7 or 0.75 award full marks for the correct answer with no working 0.746 or 0.747 or 0.750 scores 1 mark	**(2)** AO 3 2a AO 3 2b

Q8.

Question Number	Answer	Acceptable answers	Mark
(a)(i)	**A**		**(1)**

Question Number	Answer	Acceptable answers	Mark
(a)(ii)	A description to include any two of • Gravitational / potential energy reduces (1) • kinetic energy increases (1) • total energy remains constant (1)	Ignore energy changes resulting from impact with sand GPE reduces KE increases Allow GPE is transferred to KE for 2 mark	**(2)**

Question Number	Answer	Acceptable answers	Mark
(b)	A explanation linking • (work is done) displacing the sand (1) with EITHER • (as) <u>kinetic</u> energy of the ball(s) has been transferred (1) OR • by the force between the ball and the sand (1)	sand moving/ pushing/ blowing upwards OWTTE or ball sinking into sand	**(2)**

Question Number	Answer	Acceptable answers	Mark
(c) (i)	transposition mass = momentum / velocity (1) substitution mass = 0.46 / 6.2 (1) evaluation 0.074 (kg) / 74g (1)	Subst. and transform. either order 1 mark only can be scored for correct substitution after incorrect transposition. Give full marks for correct answer with no working. Answers that round to 0.074 (kg) 0.07 (kg)	**(3)**

Question Number	Answer	Acceptable answers	Mark
(c)(ii)	substitution (impact) force = 0.46 / 0.17 (1) evaluation 2.7 (N) (1)	Give full marks for correct answer with no working. Ignore power of ten error until evaluation Answers which round to 2.7 Allow ECF if candidate has used mass from part (i) in F=m(v-u) / T $F = \frac{6.2 - 0}{0.17} \times 0.074$ (1) = 2.7 (N) (1)	**(2)**

Q9.

Question number	**Answer**	**Additional guidance**	**Mark**
(i)	4.4 m/s ^{2}		**(1)**

Question number	**Answer**	**Additional guidance**	**Mark**
(ii)	graph (if projected back) does not pass through origin OWTTE (1)	accept not a straight line	**(1)**

Question number	Answer	Additional guidance	Mark
(iii)	An answer that combines the following points to provide a plan/method: • raise left hand end of runway (1) • (so that) force of gravity on trolley will balance frictional forces (1)	(so that) trolley travels at constant speed when given a small push	(2)

Q10.

Question Number	Answer	Additional guidance	Mark
(i)	a description to include: add weight / mass (1) to the weight hanger (1)	ignore references to friction here by inclining runway allow (component of) gravity to act on trolley	(2) AO 1 2

Question Number	Answer	Additional guidance	Mark
(ii)	a description to include: transfer mass (1) between trolley and hanger (1)	allow weight(s) for mass mass removed from trolley = mass added to hanger for 2 marks	(2) AO 1 2

Question Number	Answer	Additional guidance	Mark
(iii)	an explanation that links: raise one end of the runway (1) (so that) trolley (not attached to weight hanger) rolls at constant speed / just starts to move / (force of) gravity (on the trolley) balances forces of friction (1)	 credit methods for reducing friction directly (e.g. oil wheels, runway etc.) to reduce (effects of) friction allow credit for identifying magnitude of frictional forces and subtracting or using graph	(2) AO 3 3b

Q11.

	Answer	Acceptable answers	Mark
(i)	substitution (1) 0.65 = 80 / t transposition (1) t = 80 / 0.65 (123 seconds)	transposition and substitution can be in either order . Allow reverse calculations eg speed = 80/120 (1) = 0.67 (about 0.65) (1) or distance = 0.65 × 120 (1) = 78 km (about 80) (1).	(2)
(ii)	A description linking any three detection of arrival of P and S waves (1) measurement of difference in arrival times (1) calculation of distance (from	Reward suitable labelled diagram	(3)

	epicentre to station) (1) triangulation/using three / several stations (1)		
(iii)	A suggestion including any two of the following Infrasound (1) some animals can hear waves below human frequency range / 20 Hz (1) they could hear P waves arriving before the (stronger) S waves arrive (1)	Some animals have greater audio / tactile sensitivity than humans	**(2)**