## Questions

**Q1.**

The transformer in a battery charger has a primary coil and a secondary coil.

The voltage across the primary coil = 230 V.

The voltage across the secondary coil = 15 V.

The current in the secondary coil is 3.1 A.

Calculate the current in the primary coil.

Use the equation

$$\text{primary current} = \frac{\text{secondary voltage} \times \text{secondary current}}{\text{primary voltage}}$$

(2)

current = ..... A

**(Total for question = 2 marks)**

**Q2.**

This question is about using the mains electricity supply.

A transformer is used to connect a laptop computer to the mains electricity supply.
The input voltage to the transformer is 230 V.
The output current from the transformer is 2.37 A.
The transformer has an output voltage of 19.0 V.
The transformer used is 100% efficient.

Calculate the input current to the transformer.

Use the equation

input current × input voltage = output current × output voltage

(3)

input current = ..... A

**(Total for question = 3 marks)**

**Q3.**

Figure 11 shows part of the UK National Grid system for the supply of electricity to homes.

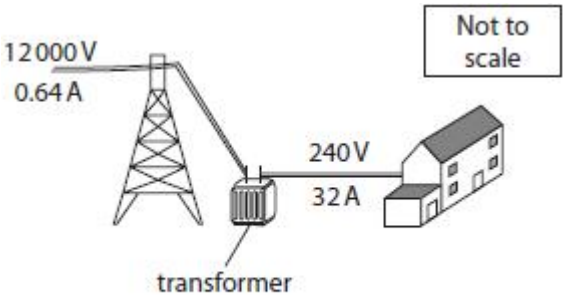


**Figure 11**

Figure 12 shows details of a transformer.

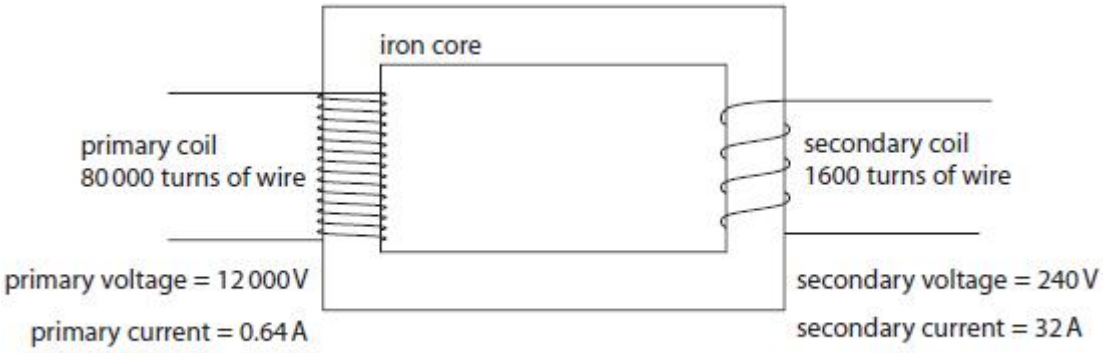


**Figure 12**

(i) Calculate the power in the primary coil.

Use the equation

$$P = V \times I$$

**(2)**

power in the primary coil = ..... W

(ii) Calculate the following for the transformer in Figure 12.

$$\frac{\text{number of turns in secondary coil}}{\text{number of turns in primary coil}}$$

**(2)**

.....

(iii) For the transformer in Figure 12, evaluate, in its simplest form, the ratio

secondary voltage : primary voltage

**(2)**

..... : .....

**(Total for question = 6 marks)**

**Q4.**

Figure 18 is a diagram showing a part of the National Grid, used to supply electrical power to homes.

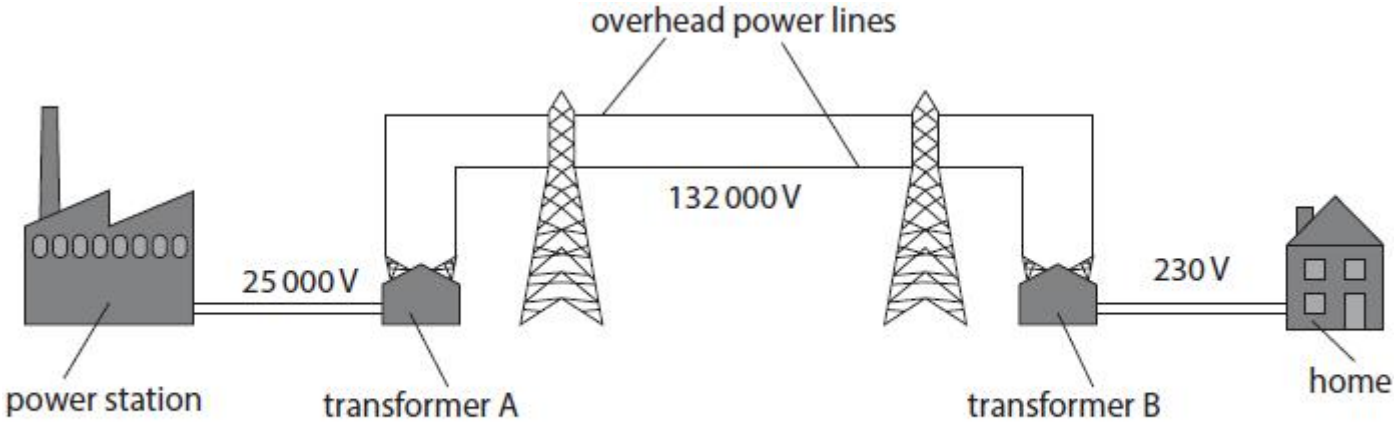


**Figure 18**

Using information from Figure 18, explain how electrical power is distributed from power stations to homes.

Your answer should refer to

- the role of the transformers
- the different voltages
- how energy losses are reduced

**(6)**

.....

.....

.....

.....

.....

.....

.....

.....

.....

.....

.....

.....

.....

.....

.....

.....

.....

**(Total for question = 6 marks)**

**Q5.**

Figure 11 shows part of the UK National Grid system for the supply of electricity to homes.

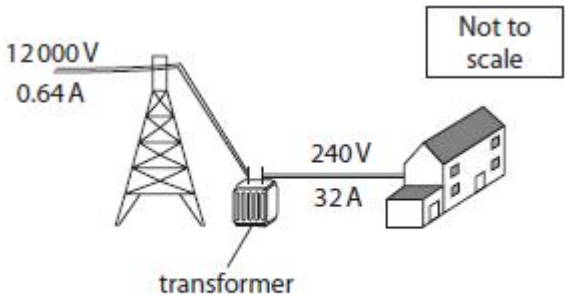


**Figure 11**

Explain why the National Grid uses high voltages with small currents to transfer electricity from power stations.

**(2)**

.....

.....

.....

.....

**(Total for question = 2 marks)**

**Q6.**

Complete the following sentences using one of the phrases from the box below.

| |
|---|
| efficiency is reduced<br>the national grid<br>a power station<br>heat loss is reduced<br>a transformer |

(i) Electrical power is generated at

**(1)**

.....

(ii) Electricity is transmitted over long distances by transmission lines that are part of

**(1)**

.....

(iii) Electricity is transmitted at high voltages so that

**(1)**

.....

**(Total for question = 3 marks)**

**Q7.**

In a small transformer

- the primary voltage is 230 V
- the primary current is 0.020 A
- the secondary voltage is 5.0 V

Calculate the secondary current.

Use the equation

$$I_s = \frac{V_p \times I_p}{V_s}$$

**(2)**

secondary current = ..... A

**(Total for question = 2 marks)**

**Q8.**

Which statement is true for transformers?

**(1)**

☐ **A** Transformers can only step-up voltages.
☐ **B** Transformers can only step-down voltages.
☐ **C** Transformers can work with direct current.
☐ **D** Transformers have primary and secondary coils.

**(Total for question = 1 mark)**

## Mark Scheme

Q1.

| Question number | Answer | Additional guidance | Mark |
|---|---|---|---|
| | substitution (1)<br><br>$\frac{15 \times 3.1}{230}$<br><br>evaluation (1)<br><br>0.20 (A) | <br><br><br><br><br><br>allow any value that rounds to 0.20; e.g. 0.2022<br><br>award full marks for the correct answer without working | **(2)** |

**Q2.**

| Question number | Answer | Additional guidance | Mark |
|---|---|---|---|
| | | rearrangement and substitution in either order | (3) AO2 |
| | substitution (1)<br>$(I_p) \times 230 = 19 \times 2.37$ | allow numerical values written above equation | |
| | rearrangement (1)<br>$(Ip\ ) = (19.0 \times 2.37) \div 230$ | $input\ voltage = (output\ voltage \times output\ current) \div input\ voltage$ | |
| | evaluation (1)<br>input current = 0.196 (A) | award full marks for any answer that rounds to 0.2(00) (A)<br>award 1 mark for 5.1(07) (substitution with upside down rearrangement)<br>award full marks for correct answer without working | |

**Q3.**

| Question number | Answer | Additional guidance | Mark |
|---|---|---|---|
| **(i)** | substitution (1)<br><br>(power =) 12000 x 0.64<br><br>evaluation (1)<br><br>R = 7700 (W) | <br><br>allow (power =) 240 x 32<br><br><br><br>any answer that rounds to 7700 (W) e.g. 7680 (W)<br><br>award full marks for the correct answer without working | **(2)**<br>**AO3** |

| Question number | Answer | Additional guidance | Mark |
|---|---|---|---|
| **(ii)** | substitution (1)<br><br>( $\frac{\text{number of turns in secondary coil}}{\text{number of turns in primary coil}}$<br><br>=) $\frac{1600}{80000}$ or $\frac{1}{50}$<br><br>evaluation (1)<br>0.02(0) | <br><br><br><br><br><br>0.02(0) to any other power of 10 scores 1 mark<br><br>award full marks for correct answer without working<br><br>accept for 1 mark (seen anywhere)<br>$\frac{50}{1}$, $\frac{80000}{1600}$, 50<br>**or**<br>(from counting turns)<br>$\frac{4}{15}$, 0.27 | **(2)**<br>**AO2** |

| Question number | Answer | Additional guidance | Mark |
|---|---|---|---|
| (iii) | (ratio =) 240 : 12000 (1)<br><br>1 : 50 (1) | <br><br>0.02 : 1<br><br>award full marks for correct answer without working | (2)<br>AO2 |

**Q4.**

| Question number | Indicative content | Mark |
|---|---|---|
| * | Answers will be credited according to candidate's deployment of knowledge and understanding of the material in relation to the qualities and skills outlined in the generic mark scheme.<br>The indicative content below is not prescriptive and candidates are not required to include all the material which is indicated as relevant. Additional content included in the response must be scientific and relevant.<br><br>AO1 / AO3<br>**Distribution**<br>• voltage at power station higher than in homes<br>• transformers change voltages<br>• electrical energy is transferred on overhead power lines<br>• overhead power lines are at 132 kV<br>**Action of transformers**<br>• step-up transformers convert 25 kV to 132 kV<br>• step-up transformers reduce the current | **(6)**<br>**AO1.1 AO3.3a** |
| | • step down transformers convert high voltages of power lines to 230 V for use in homes<br>• low voltage is safer for use in homes<br>**Efficiency**<br>• transformers make the distribution of electricity more efficient<br>• high currents cause heating effect<br>• dissipation of thermal energy/heat to the atmosphere<br>• increasing the voltage/ reducing the current in the overhead power lines reduces energy / heat loss | |

| Level | Mark | Descriptor |
|---|---|---|
| | 0 | • No awardable content |
| Level 1 | 1–2 | • Interpretation and evaluation of the information attempted but will be limited with a focus on mainly just one variable (AO3)<br>• Presents an explanation with some structure and coherence (AO1) |
| Level 2 | 3–4 | • Interpretation and evaluation of the information on both variables synthesises mostly relevant understanding (AO3)<br>• Presents an explanation that has structure, which is mostly clear coherent and logical.(AO1) |
| Level 3 | 5–6 | • Interpretation and evaluation of the information, demonstrating throughout the skills of synthesising relevant understanding (AO3)<br>• Presents an explanation that has a well-developed structure which is clear, coherent and logical. (AO1) |

| Level | Mark | Additional Guidance | General additional guidance – the decision within levels<br><br>e.g. - At each level, as well as content, the scientific coherency of what is statec will help place the answer at the top, or the bottom, of that level. |
|---|---|---|---|
| | 0 | No rewardable material. | |
| Level 1 | 1–2 | Additional guidance<br><br>Isolated facts about power distribution at any point. | Possible candidate responses<br><br>power lines are at 132000V<br><br>homes get electricity at 230V<br><br>transformers change voltages<br><br>improves efficiency |
| Level 2 | 3–4 | Additional guidance<br><br>Limited explanation giving<br><br>link between voltage change and type of transformer<br><br>OR<br><br>link between high voltage and power lines and energy loss<br><br>OR<br><br>link between current and transformer / energy loss | Possible candidate responses<br><br>the step-up transformer increases the voltage<br><br>the step-down transformer changes the voltage from 132000 V to 230V<br><br>A is a step-up transformer and B is a step-down transformer<br><br>the high voltage in overhead power lines reduces heat losses<br><br>it is more efficient because the power lines are at a high voltage<br><br>transformers can reduce current<br><br>low current means less energy loss |

**Q5.**

| Question number | Answer | Additional guidance | Mark |
|---|---|---|---|
| | explanation linking any two from:<br><br>(smaller currents) reduce heating effect (in cables) (1)<br><br>less energy / power wasted (in cables) (1)<br><br>increases efficiency (1) | accept thermal energy for heat energy<br><br>allow will not get (as) hot / heat loss is reduced<br><br>allow 2 marks for 'reduce(s) heat energy loss' | **(2)**<br>**AO1** |

**Q6.**

| Question Number: | Answer | Mark |
|---|---|---|
| **(i)** | a power station | **(1)**<br>AO 1 1 |

| Question Number: | Answer | Mark |
|---|---|---|
| **(ii)** | the national grid | **(1)**<br>AO 1 1 |

| Question Number: | Answer | Mark |
|---|---|---|
| **(iii)** | heat loss is reduced | **(1)**<br>AO 1 1 |

**Q7.**

| Question Number: | Answer | Additional Guidance | Mark |
|---|---|---|---|
| | substitution (1)<br>$(I_s) = \frac{230 \times 0.02}{5.0}$<br>evaluation (1)<br>0.9(A) | accept 0.92 (A)<br>award full marks for the correct answer without working | **(2)**<br>AO 2 1 |

**Q8.**

| Question Number: | Answer | Mark |
|---|---|---|
| | D transformers have primary and secondary coils.<br><br>**The only correct answer is D**<br><br>***A*** *is not correct because transformers can step-up and step-down voltages*<br>***B*** *is not correct because transformers can step-up and step-down voltages*<br>***C*** *is not correct because transformers only work with alternating current* | **(1)**<br>AO 1 1 |