Questions

Q1.

Answer the question with a cross in the box you think is correct (☒). If you change your mind about an answer, put a line through the box (☒) and then mark your new answer with a cross (☒).

A plug connects a television to the mains supply.

(i) The plug contains a fuse that is connected to the

(1)

- ☐ **A** live pin
- ☐ **B** negative pin
- ☐ **C** neutral pin
- ☐ **D** positive pin

(ii) A 3 A fuse is used in the plug.

Explain what happens if a fault causes the current to rise to more than 3 A.

(2)

.....

.....

.....

.....

(iii) A fuse is a safety device.

State **one** other safety device that can be used in domestic electrical wiring.

(1)

.....

.....

(Total for question = 4 marks)

Q2.

Some students investigate resistors in parallel.

The students set up a circuit containing **four** identical resistors.

The circuit used is shown in Figure 21.

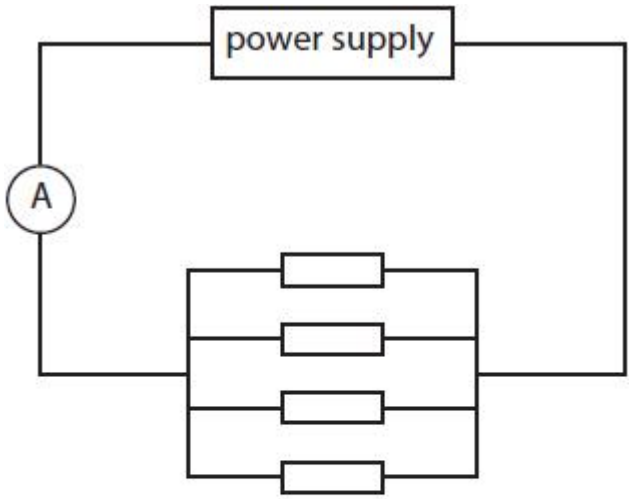

Figure 21

The students measure the current from the power supply and the voltage (p.d.) across the resistors.

(i) On Figure 21, draw a voltmeter connected to measure the voltage (p.d.) across the resistors.

(1)

The students remove one resistor and measure the current and voltage again with only 3 resistors in the circuit.

They repeat the measurements of current and voltage with only 2 resistors in the circuit and then with only 1 resistor in the circuit.

Figure 22 is a table of their results.

number of resistors	current in mA	voltage in V
4		6.00
3	27.3	6.00
2	18.2	6.00
1	9.1	6.00

Figure 22

(ii) Using data from the table in Figure 22, predict the current from the power supply when there are 4 resistors in the circuit.

(1)

current = ... mA

(iii) Using data from the table in Figure 22, calculate the resistance of **only 1** resistor.

(3)

resistance = ...Ω

(iv) Using data from the table in Figure 22, explain what happens to the **total resistance of the circuit** as the number of resistors in parallel decreases.

(3)

.....

.....

.....

.....

.....

.....

(Total for question = 8 marks)

Q3.

There is a current of 2.5 mA in a circuit.

Calculate the amount of charge that moves past a point in the circuit in 80 seconds.

State the unit of charge.

(3)

charge = ... unit .....

(Total for question = 3 marks)

Q4.

This question is about using the mains electricity supply.

(i) An electric kettle is used to boil some water.
The mains supply voltage is 230 V.
The power supplied to the kettle is 1.9 kW.

Calculate the current in the kettle.
Use the equation

$$I = \frac{P}{V}$$

(2)

current supplied to the kettle = ... A

(ii) A coffee machine takes 120 s to heat some water.

Mains supply voltage = 230 V
Current in this coffee machine = 7.4 A
Calculate the energy transferred to the coffee machine in 120 s.
Use an equation selected from the list of equations at the end of the paper.

(2)

energy transferred to coffee machine = ... J

(Total for question = 4 marks)

Q5.

The circuit in Figure 1 is switched on.

A charge of 1.2 C leaves the battery in a time of 4.0 s.

Calculate the current in the circuit.

Use the equation

$$\text{current} = \frac{\text{charge}}{\text{time}}$$

current = ... A

(Total for question = 2 marks)

Q6.

An electric heater is connected to a 230 V supply.

The power supplied to the heater is 2.6 kW.

Calculate the current in the heater.

(3)

current = ... A

(Total for question = 3 marks)

Q7.

The 230 V mains supply transfers 9000 J of energy to the pump motor in 1 minute.

Calculate the current in the pump motor.

Use the equation

$$I = \frac{E}{V \times t}$$

(3)

current = ... A

(Total for question = 3 marks)

Q8.

Figure 2 shows the junction of three wires, F, G and H, in a circuit.
The current in wire F is 6.0 A.
The current in wire G is 3.5 A.

Calculate the current in wire H.

(1)

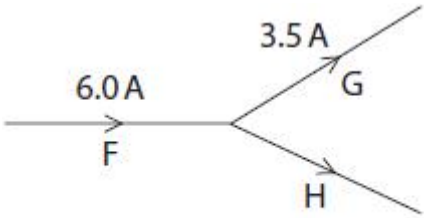

Figure 2

current in wire H = ... A

(Total for question = 1 mark)

Q9.

(i) Figure 11 shows an electric kettle.

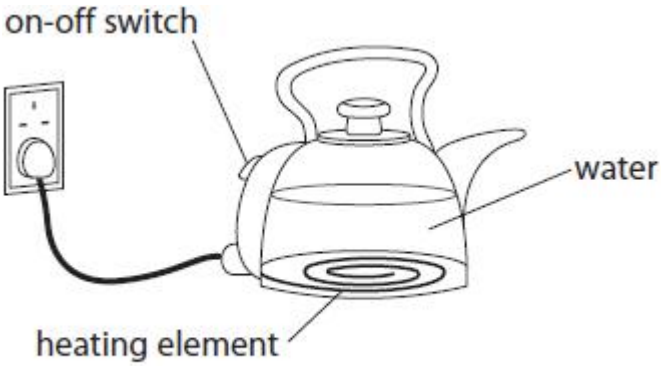

Figure 11

The kettle contains 1.5 kg of water.
The kettle is switched on.
Calculate the energy needed to raise the temperature of the water by 50 °C.
Specific heat capacity of water = 4200 J/kg °C
Use the equation

$$\Delta Q = m \times c \times \Delta\theta$$

(2)

energy needed = ... J

(ii) The amount of energy, *E*, needed to bring the water to boiling point is 670 000 J.

The kettle has a power of 3500 W.
Calculate the time, *t*, it takes to bring the water to boiling point.
Use the equation

$$P = \frac{E}{t}$$

(3)

time to bring the water to boiling point = ... s

(Total for question = 5 marks)

Q10.

The voltage (potential difference) across a length of wire is 1.5 V.

A charge of 0.042 C flows through the wire.

Calculate the energy transferred.

Use the equation

$$E = Q \times V$$

(2)

E = ... J

(Total for question = 2 marks)

Mark Scheme

Q1.

Question Number	Answer	Additional guidance	Mark
(i)	**A** live pin **B** is incorrect because the mains plug has no negative pin **C** is incorrect because the neutral pin is at 0 V **D** is incorrect because the mains plug has no positive pin		(1) AO1.1

Question Number	Answer	Additional guidance	Mark
(ii)	An explanation linking the fuse melts (1) (so) stops / switches off current (1)	 allow fuse blows / breaks circuit is broken allow switches off {charge flow / circuit / TV / appliance / supply / electricity / voltage / power / energy}	(2) AO2.2

Question Number	Answer	Additional guidance	Mark
(iii)	**any one** from circuit breaker (1) earth (wire/pin) (1) surge protector (1) cable clamp (inside plug) (1) insulation / armouring (1) socket protector/cover (1)	 accept RCD / ELCB / RCCB / GFCI / MCB allow ground accept SPD accept rubber coating accept plug cover ignore switch / fuse / fuse box	**(1)** **AO1.1**

Q2.

Question	Answer	Additional guidance	Mark
(i)	voltmeter in parallel with resistors (1)	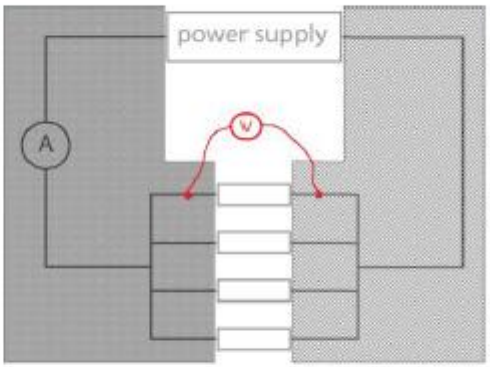 one voltmeter connection in each shaded region	**(1)** **AO1.2**

Question	Answer	Additional guidance	Mark
(ii)	36(.4) (mA) (1)	allow 36 to 37 inclusive may be seen in table in Figure 22	**(1)** **AO3.2**

Question	Answer	Additional guidance	Mark
(iii)	substitution into $V = IR$ (1) $6(.00) = 9.1 (\times 10^{-3}) \times R$ rearrangement (1) $(R =) \frac{6(.00)}{9.1 (\times 10^{-3})}$	allow substitution and rearrangement in either order accept 18.2/2 or 27.3/3 or (36 to 37)/4 in place of 9.1 allow substitution of correct values into a visible, incorrectly rearranged algebraic equation for this mark only $(R =) \frac{V}{I}$	**(3)** **AO2.1**
	evaluation (1) 660 (Ω)	allow values that round to 660 e.g. 659.3 award full marks for the correct answer without working. value rounding to 660 to any other power of 10 scores 2 marks	

Question	Answer	Additional guidance	Mark
(iv)	an explanation linking: (total) resistance increases (1)		**(3)** **AO3.2**

	(because) current decreases (1) (and) voltage stays the same (1)	fewer paths for the current resistance calculations supporting increasing resistance	

Q3.

Question number	Answer	Additional guidance	Mark
	substitution into Q = I × t (1) (Q =) 2.5 (× 10^{-3}) × 80 evaluation (1) (Q =) 0.2 unit (1) coulombs OR C OR As	 allow 0.2 to any other power of ten for 1 mark award first two marks for correct answer without working independent mark allow c award 3 marks for 200 mC OR 200 mAs award 2 marks for 200 C OR 200 As	**(3)** **AO2**

Q4.

Question number	Answer	Additional guidance	Mark
i	substitution (1) $(I = \frac{P}{V}) = \frac{1.9 \text{ (x } 10^3)}{230}$ (1) evaluation (1) 8.3 (A)	8.3 / 8.26 (A) award full marks for correct answer without working award one mark for 8.26×10^{-3} / 0.0083	**(2)** **AO2**

Question number	Answer	Additional guidance	Mark
ii	choice and substitution (1) $E = I \times V \times t$ = 7.4 x 230 x 120 evaluation (1) 200000 (J)	accept 204000 / 204240 award full marks for correct answer without working award 1 mark for 3400 / 3404 (J) (using 2 minutes as time)	**(2)** **AO2**

Q5.

Question	Answer	Additional guidance	Mark
	substitution (1) (current =) $\frac{1.2}{4(.0)}$ evaluation (1) (current =) 0.3(0) (A)	 award full marks for the correct answer without working	**(2)** **AO2.2**

Q6.

Question number	Answer	Additional guidance	Mark
	substitution into P = V × I (1) 2600 = 230 × I rearrangement (1) I = P ÷ V evaluation (1) 11 (A)	Substitution and re-arrangement in either order I = 2600 ÷ 230 for 2 marks allow answers that round to 11 award full marks for correct answer without working allow I = 2.6 ÷ 230 for 1 mark allow 0.011 (A) for 2 marks max if no other marks scored, award 1 mark for 2.6 kW = 2600 W	**(3)**

Q7.

Question number	Answer	Additional guidance	Mark
	conversion of time (1) 1 x 60 (s) substitution (1) (I =) $\frac{9000}{230 \text{ (x 60)}}$ evaluation (1) (I =) 0.65 (A)	 any value that rounds to 0.65; e.g. 0.65217 0.7 0.6 award full marks for the correct answer without working allow 2 marks for answer of 39(.130)	**(3)** **AO2**

Q8.

Question Number	Answer	Additional guidance	Mark
	2.5(A)	Accept $2\frac{1}{2}$ (A)	**(1)**

Q9.

Question Number	Answer	Additional guidance	Mark
(i)	substitution (1) $(\Delta Q) = 1.5 \times 4200 \times 50$ evaluation (1) 320 000 (J)	 accept 315 000 (J) 310 000 (J) award full marks for the correct answer without working 320 000 000 315 000 000 310 000 000 score 1 mark (mass in grams)	(2)

Question Number	Answer	Additional guidance	Mark
(ii)	substitution (1) $3500 = \frac{670\,000}{t}$ rearrangement (1) $(t=) \frac{670\,000}{3500}$ evaluation (1) 190(s)	accept substitution and rearrangement in either order accept any answer that round to 190(s) power of ten error award 2 marks maximum award full marks for the correct answer without working	(3)

Q10.

Question number	Answer	Additional guidance	Mark
	substitution (1) (E =) 0.042 x 1.5 evaluation (1) (E =) 0.063 (J) (1)	 6.3×10^{-2} award 2 marks for the correct answer without working accept 0.063 to any other power of 10 for 1 mark	**(2)** **AO2**