Questions

Q1.

When the current in a lamp is 0.15 A, the resistance of the lamp is 40 Ω.

Calculate the voltage across the lamp.

Use the equation

$$V = I \times R$$

(2)

voltage = ... V

(Total for question = 2 marks)

Q2.

A student investigates how the current in a lamp changes with the potential difference across the lamp.

The student uses the results to calculate the resistance of the lamp.

The results are shown in the table in Figure 17.

potential difference in V	current in A	resistance in Ω
1.0	0.09	11
2.0	0.14	14
3.0	0.18	17
4.0	0.22	18
5.0	0.26	
6.0	0.30	20

Figure 17

(i) One value of resistance is missing from the table in Figure 17.
Calculate the value of resistance that is missing from the table.

(3)

missing resistance = ... Ω

(ii) The student writes this conclusion:

'The resistance of the lamp is directly proportional to the potential difference.'

Comment on the student's conclusion.
Use information from Figure 17 in your answer.

(3)

.....

.....

.....

.....

.....

.....

(Total for question = 6 marks)

Q3.

(i) There is a current of 0.46 A in a lamp.

Calculate the total charge that flows through the lamp in 30 seconds.
Use the equation

charge = current × time in seconds

(2)

charge = ... C

(ii) The voltage across the lamp is 6.0 V.

The current in the lamp is 0.46 A.
Calculate the energy transferred to the lamp in one minute.
Use the equation

energy transferred = current × voltage × time in seconds

(2)

energy transferred = ... J

(Total for question = 4 marks)

Q4.

The potential difference (voltage) across a piece of wire is 1.56 *V*.

The current in the wire is 0.45 *A*.

Calculate the resistance of this piece of wire.

Use the equation

$$V = I \times R$$

(2)

resistance = ... Ω

(Total for question = 2 marks)

Q5.

Figure 19 shows a lamp connected to a d.c. power supply.

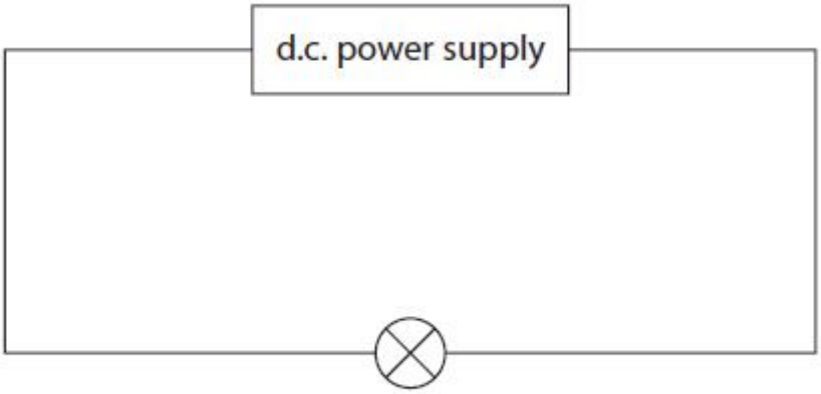

Figure 19

The power supply provides a potential difference (voltage) of 4.5 V.

The current in the lamp is 0.30 A.

(i) Calculate the resistance of the lamp.
Use the equation

$$R = \frac{V}{I}$$

(1)

resistance = ... Ω

(ii) Calculate the power supplied to the lamp.

(2)

power = ... W

(Total for question = 3 marks)

Q6.

A wire in a circuit carries a current of 0.9 A.
Calculate the quantity of charge that flows through the wire in 50 s.

State the unit of charge with your answer.

Use the equation

charge = current × time

(3)

quantity of charge = ... unit .....

(Total for question = 3 marks)

Q7.

An electric fire is connected to a 230 V mains supply.

A current of 9.0 A is supplied to the fire.

Calculate the power supplied to the fire.

Use the equation

power = current × voltage

(2)

power = ... W

(Total for question = 2 marks)

Q8.

Figure 14 shows a saucepan of milk being heated on an electric cooker.

© Por Fabian Ponce Garcia/Shutterstock

Figure 14

The cooker supplies 130 000 J of energy in a time of 87 s.

(i) Calculate the power supplied by the cooker.
Use the equation

$$P = \frac{E}{t}$$

Give your answer to 2 significant figures.

(3)

power = ... W

(ii) The cooker supplies 130 000 J of energy but only 96 000 J of this energy is used to heat the milk.

Calculate the efficiency of heating the milk using this cooker.
Use the equation

$$\text{efficiency} = \frac{\text{useful energy transferred}}{\text{total energy supplied}}$$

(2)

efficiency = ...

(Total for question = 5 marks)

Q9.

Figure 11 shows part of the UK National Grid system for the supply of electricity to homes.

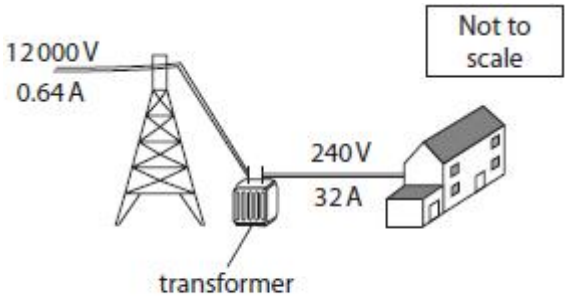

Figure 11

Figure 12 shows details of a transformer.

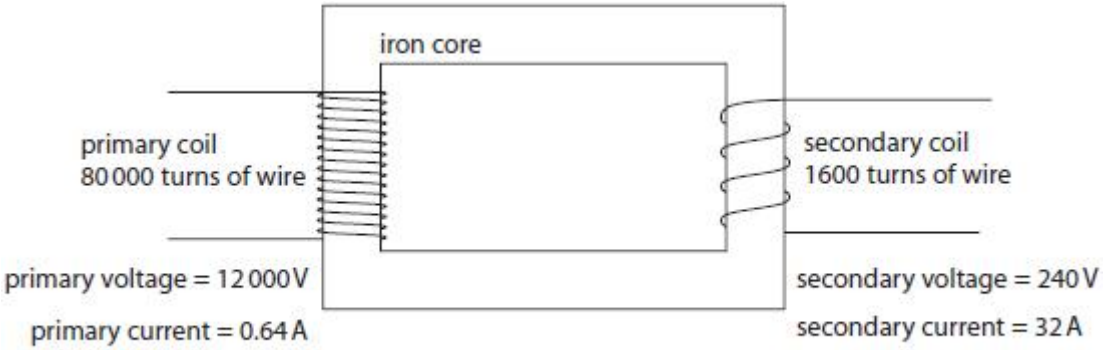

Figure 12

(i) Calculate the power in the primary coil.

Use the equation

$$P = V \times I$$

(2)

power in the primary coil = ... W

(ii) Calculate the following for the transformer in Figure 12.

$$\frac{\text{number of turns in secondary coil}}{\text{number of turns in primary coil}}$$

(2)

.....

(iii) For the transformer in Figure 12, evaluate, in its simplest form, the ratio

secondary voltage : primary voltage

(2)

..... : .....

(Total for question = 6 marks)

Q10.

The mains supply to the television is 230 V.

The current supplied to the television is 0.53 A.

Calculate the power input to the television.

Use the equation

$$P = I \times V$$

(2)

power = ... W

(Total for question = 2 marks)

Mark Scheme

Q1.

Question number	Answer	Additional guidance	Mark
	substitution (1) 0.15 x 40 evaluation (1) 6(.0) (V)	 award full marks for correct answer without working	**(2)** **AO2**

Q2.

Question Number	Answer	Additional guidance	Mark
(i)	recall and substitution into V = IR (1) 5.0 = 0.26 x R rearrangement (1) (R =) $\frac{5.0}{0.26}$ evaluation (1) 19 (Ω)	accept substitution and rearrangement in either order (R =) $\frac{V}{I}$ $\frac{5.0}{0.26}$ scores 2 marks accept answers that round to 19 (Ω) (e.g. 19.23) accept answer written in table if not written on answer line. award full marks for the correct answer without working	(3)

Question Number	Answer	Additional guidance	Mark
(ii)	a comment that includes the following points idea that resistance increases with potential difference (1) idea that doubling the potential difference does not result in doubling of resistance (1) **OR** V = constant x R is not supported by this data (1) correct processing of data from the table to support either of the above mark points (1)	idea that equal increments of potential difference do not cause equal increments of resistance reverse argument e.g. if student was correct then equal increments of p.d. would cause equal increment of resistance if student was correct then current would be constant ignore simple quoting of data for this mark	(3)

Q3.

Question number	Answer	Additional guidance	Mark
(i)	substitution (1) (charge) = 0.46 x 30 evaluation (1) (charge) = 14 (C)	 any number that rounds to 14 e.g. 13.8 award full marks for the correct answer without working	**(2)** **AO2**

Question number	Answer	Additional guidance	Mark
(ii)	substitution (1) (energy transferred) = 0.46 x 6.0 x 60 evaluation (1) (energy transferred) = 170 (J)	 allow (energy transferred) = 0.46 x 6.0 x 1 or (energy transferred) = 0.46 x 6.0 x 30 any number that rounds to 170 e.g. 165.6 or 166 allow answers that round to 2.8 or 83 e.g. 2.76 or 82.8 for 1 mark only award full marks for the correct answer without working	**(2)** **AO2**

Q4.

Question number	Answer	Additional guidance	Mark
	substitution (1) 1.56 = 0.45 x R rearrangement and evaluation (1) (R =) 3.5 (ohms)	alternative method rearrangement (1) (R =) $\frac{V}{I}$ **or** (R=) $\frac{1.56}{0.45}$ (substitution and) evaluation (1) (R =) 3.5 (ohms) allow values that round to 3.5 e.g. 3.46(666) 3.47 etc award full marks for the correct answer without working	**(2)** **AO2**

Q5.

Question number	Answer	Additional guidance	Mark
(i)	Substitution and evaluation (1) 15 (Ω)		**(1)** **A02**

Question number	Answer	Additional guidance	Mark
(ii)	select / recall (1) (power =) V x I or (power =) I^2 x R or (power =) $\frac{V^2}{R}$ substitution and evaluation (1) (power =) 1.4 (W)	 (power =) 4.5 x 0.3 0.3^2 x 15 $\frac{4.5^2}{15}$ allow 1.3(5) (W) award full marks for the correct answer without working	**(2)** **A02**

Q6.

Question Number	Answer	Additional guidance	Mark
	substitution (1) (Q=)0.9 x 50 evaluation (1) 45 unit (1) coulomb	 award 2 marks for the correct answer without working If no substitution seen 4.5 or 450 scores 1 mark only independent mark C, c, As Accept recognisable spellings of coulomb	**(3)**

Q7.

Question	Answer	Additional guidance	Mark
	substitution (1) $P = 9.0 \times 230$ evaluation (1) 2100 (W)	 allow values that round to 2100 (W) e.g. 2070 (W) award full marks for the correct answer without working	**(2)** **AO2.1**

Q8.

Question	Answer	Additional guidance	Mark
(i)	substitution (1) (P =) $\frac{130\,000}{87}$ evaluation (1) (P =) 1494 (W) value to 2sf (1) 1500 (W)	 award two marks for the correct answer without working independent mark for **any** number to 2sf	**(3)** **AO2.1**

Question	Answer	Additional guidance	Mark
(ii)	substitution (1) (efficiency =) $\frac{96\,000}{130\,000}$ evaluation (1) (efficiency =) 0.74	 accept values that round to 0.74 e.g. 0.7385 accept 74 % for 2 marks allow 74 without % sign for 1 mark only allow 0.73 or 73% for 1 mark award full marks for the correct answer without working	**(2)** **AO2.1**

Q9.

Question number	Answer	Additional guidance	Mark
(i)	substitution (1) (power =) 12000 x 0.64 evaluation (1) R = 7700 (W)	 allow (power =) 240 x 32 any answer that rounds to 7700 (W) e.g. 7680 (W) award full marks for the correct answer without working	**(2)** **AO3**

Question number	Answer	Additional guidance	Mark
(ii)	substitution (1) ($\frac{\text{number of turns in secondary coil}}{\text{number of turns in primary coil}}$ =) $\frac{1600}{80000}$ or $\frac{1}{50}$ evaluation (1) 0.02(0)	0.02(0) to any other power of 10 scores 1 mark award full marks for correct answer without working accept for 1 mark (seen anywhere) $\frac{50}{1}$, $\frac{80000}{1600}$, 50 **or** (from counting turns) $\frac{4}{15}$, 0.27	**(2)** **AO2**

Question number	Answer	Additional guidance	Mark
(iii)	(ratio =) 240 : 12000 (1) 1 : 50 (1)	0.02 : 1 award full marks for correct answer without working	**(2)** **AO2**

Q10.

Question Number	Answer	Additional guidance	Mark
	substitution (1) (P=) 0.53 x 230 evaluation (1) 120 (W)	 accept values that round down to 120 to 2s.f. e.g.121.9 or 122 award full marks for the correct answer without working	**(2)** **AO2.1**