Questions

Q1.

Figure 18 shows the results from an experiment where the potential difference (voltage) across a filament lamp was varied.

The current and voltage were measured.

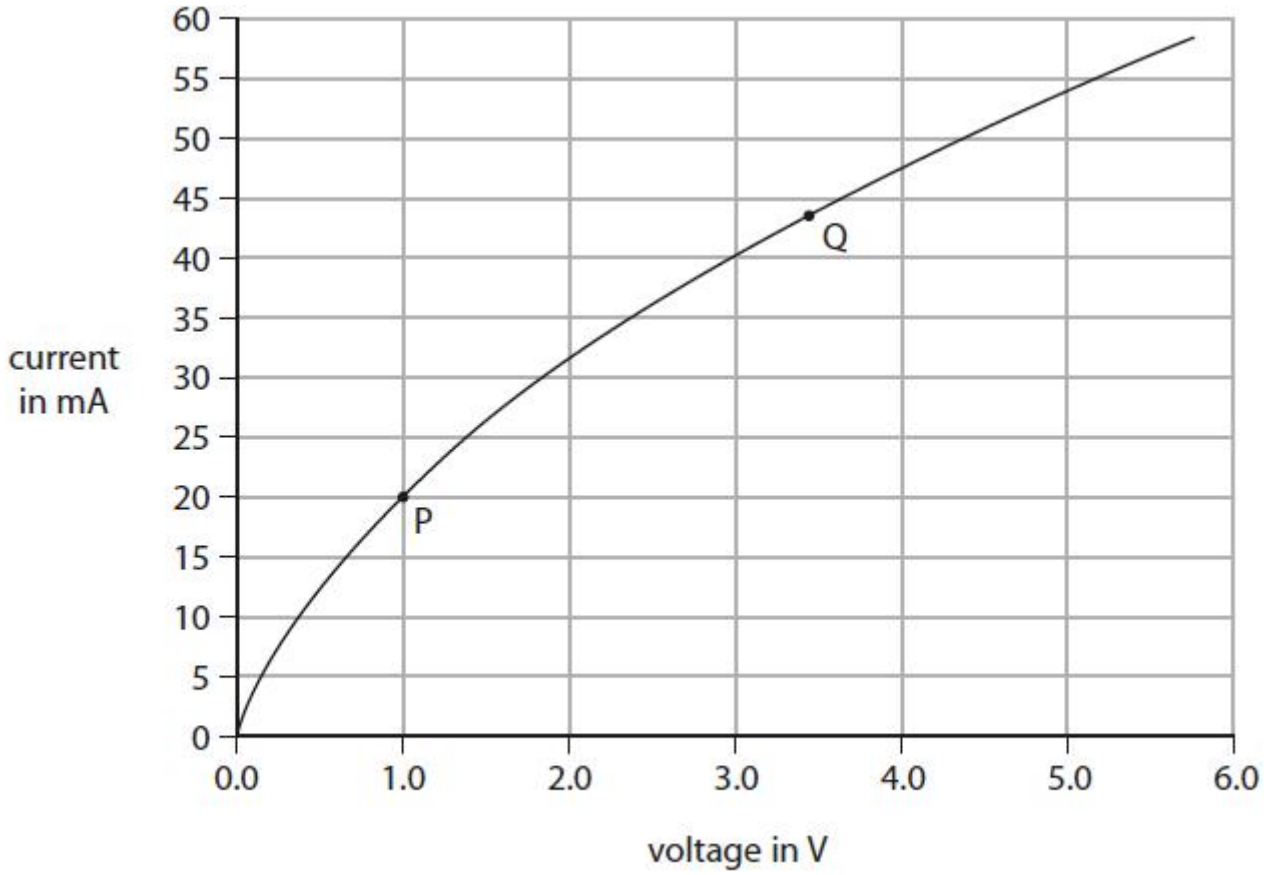

Figure 18

(i) Describe the relationship between the current and the voltage as shown in the graph in Figure 18.

(2)

.....

.....

.....

.....

(ii) Use the values of the voltage and current at point P and at point Q on the graph in Figure 18 to complete the table in Figure 19.

(2)

	voltage in V	current in mA
point P		
point Q		

Figure 19

(iii) Calculate the resistance of the filament lamp when the voltage is 4.5 V and the current is 51 mA.
Use the equation

$$R = \frac{V}{I}$$

(2)

resistance = ... Ω

(iv) Explain why the resistance of the filament lamp changes as the voltage across it increases.

(3)

.....

.....

.....

.....

.....

.....

(Total for question = 9 marks)

Q2.

Describe the difference between direct current (d.c.) and alternating current (a.c.) in electrical circuits.

(2)

.....

.....

.....

.....

(Total for question = 2 marks)

Q3.

*Figure 23 shows a drone.

© Liubov Kotliar/123RF

Figure 23

The blades on the drone are turned by electric motors.

The electric motors are powered by a battery.

Figure 25 represents the energy transfers involved when the drone rises from the ground.

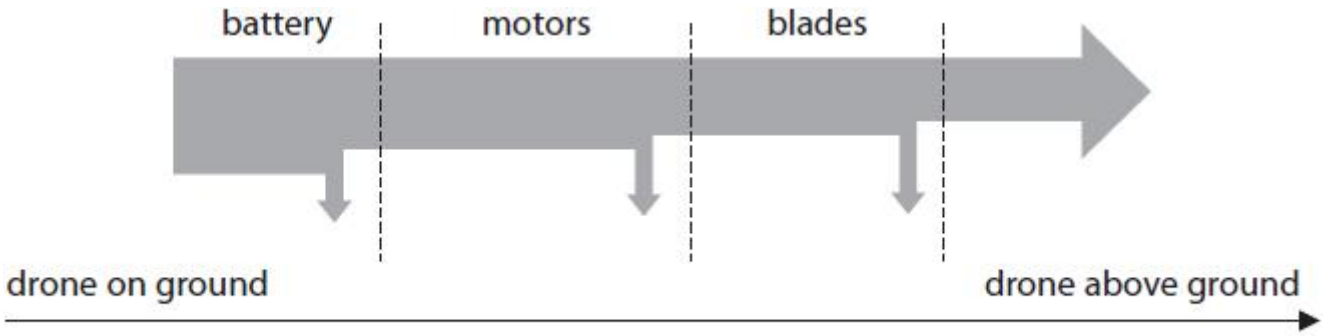

Figure 25

Describe the changes in the way energy is stored when the drone rises from the ground.

Your answer should refer to energy transfers.

(6)

.....

.....

.....

.....

.....

.....

.....

.....

.....

.....

.....

.....

.....

.....

(Total for question = 6 marks)

Q4.

A student investigates resistors connected in series in an electrical circuit.

The student has

- a 3.0 V battery
- a 22 Ω resistor
- a resistor marked X.The student does not know the value of the resistor marked X.

The student decides to measure the potential difference (voltage) across resistor X.

Figure 15 shows the circuit that the student connected.

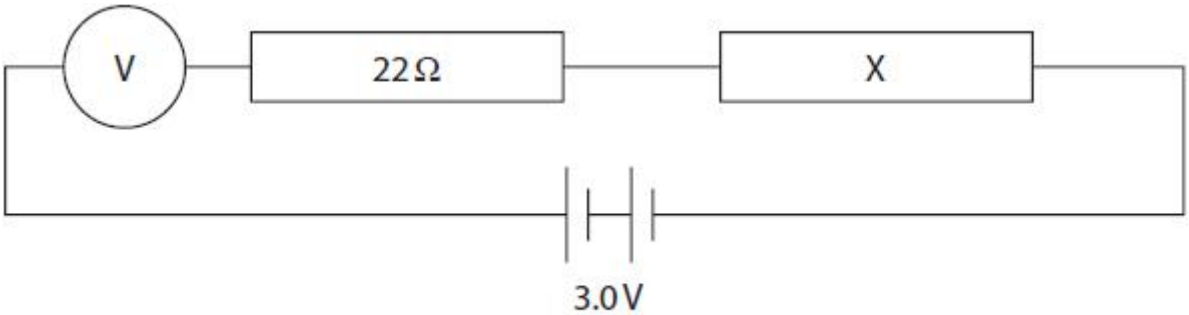

Figure 15

The circuit is connected incorrectly.

Describe how the student should correct the mistake.

(2)

.....

.....

.....

.....

(Total for question = 2 marks)

Q5.

A long piece of wire is made into a coil as shown in Figure 22.

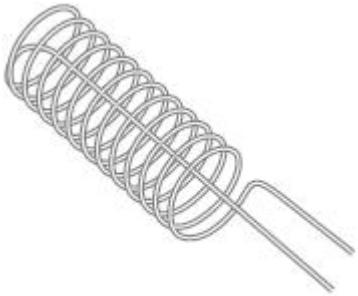

Figure 22

The coil is connected to a low voltage power supply.

Describe how this coil could be used instead of the Bunsen burner in Figure 20.

(2)

.....

.....

.....

.....

(Total for question = 2 marks)

Q6.

A student is investigating a filament lamp.

(a) (i) Complete the sentence by putting a cross (☒) in the box next to your answer.

The current in the filament lamp is a flow of

(1)

☐ **A** protons

☒ **B** neutrons
☒ **C** electrons
☒ **D** atoms

(ii) The student uses this circuit in his investigation.

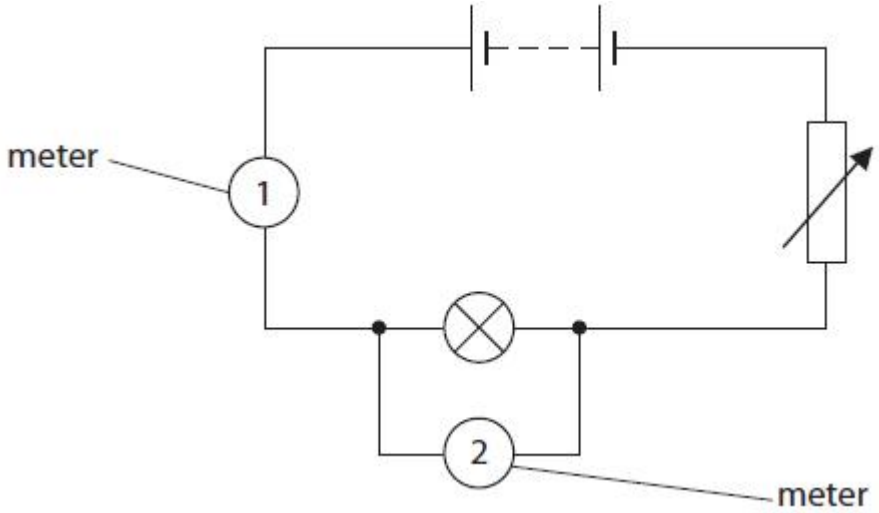

State what is measured by the meters.

(2)

Meter 1 measures
.....

Meter 2 measures
.....

(b) The normal operating potential difference (voltage) and current of the filament lamp is 6 V, 0.4 A.
Calculate the energy supplied to the lamp under these conditions in 20 s.

(2)

energy = ... J

(c) The graph shows how current varies with potential difference (voltage) for another filament lamp.

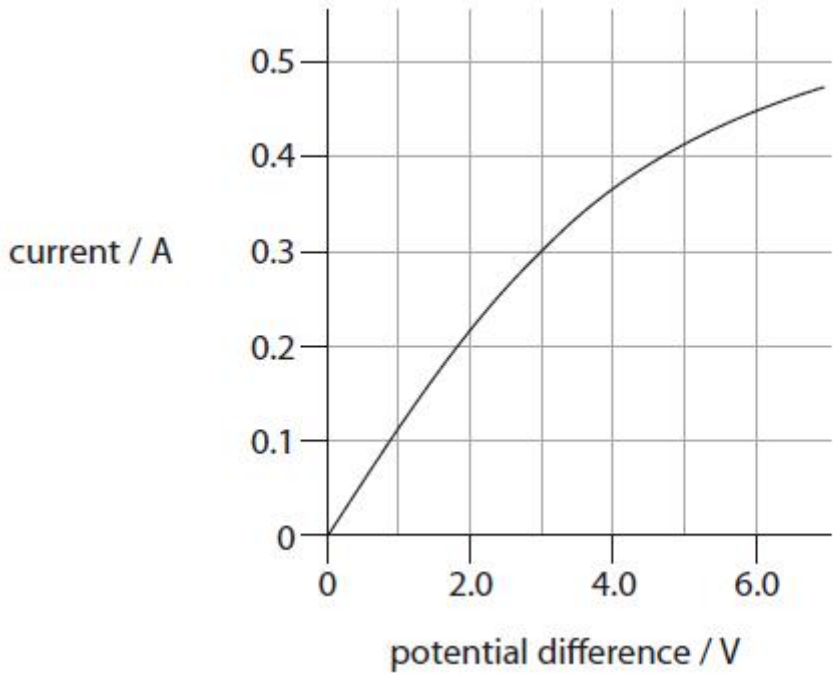

Calculate the resistance of the lamp when the current in the lamp is 0.3 A.

resistance = potential difference ÷ current ($R = V / I$)

(3)

resistance = ... Ω

(Total for Question = 8 marks)

Q7.

A student measures the current in the lamp for several values of potential difference across the lamp.

Figure 13 shows the student's results.

potential difference across the lamp in volts (V)	current through the lamp in amps (A)
0.06	0.05
0.12	0.08
0.18	0.10
0.24	0.12
0.30	0.13
0.36	0.13

Figure 13

The student uses the results in Figure 13 to write this conclusion.

'As the potential difference across the lamp increases, the current in the lamp increases and the relationship is directly proportional.'

Comment on the student's conclusion.

(3)

.....

.....

.....

.....

.....

.....

(Total for question = 3 marks)

Q8.

Figure 4 shows the inside of a mains plug.

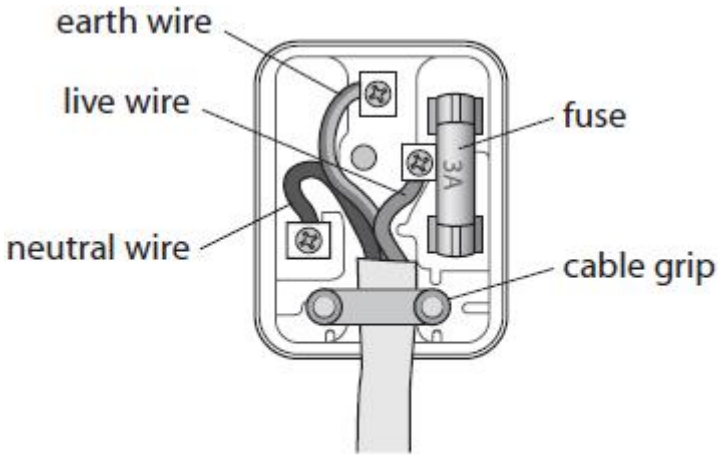

Figure 4

The mains plug has three safety features.

One of these safety features has been ticked in the table.

Put **two** more ticks in the table to show the other two safety features.

(2)

part of plug	safety feature
cable grip	✓
earth wire	
fuse	
live wire	
neutral wire	

(Total for question = 2 marks)

Q9.

A lamp is connected to a potential difference of 0.24 V.

The current in the lamp is 0.12 A.

(i) Calculate the power of the lamp.

Use the equation
$P = I \times V$

(2)

power of the lamp = ... W

(ii) The potential difference is changed to 0.30 V.

The current in the lamp is now 0.13 A.
The lamp is switched on for 35 s.
Calculate the energy that is transferred in this time.
Select an equation from the list of equations at the end of this paper.

(2)

energy transferred = ... J

(iii) The current in the lamp stays at 0.13 A.

Calculate the charge that flows through the lamp in 35 s.
Use the equation
$Q = I \times t$

(2)

charge = ... C

(Total for question = 6 marks)

Q10.

Figure 1 shows two lamps in series in a circuit.

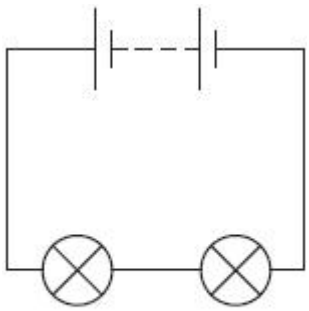

Figure 1

The resistance of each lamp is 12 Ω.

(i) Calculate the total resistance of the lamps in the circuit.

(1)

total resistance of lamps = ... Ω

(ii) The current in a lamp in Figure 1 is 0.50 A.

The resistance of the lamp is 12 Ω.

Calculate the voltage across this lamp.

Use the equation

$$V = I \times R$$

(2)

voltage = ... V

(iii) The voltage across a different lamp is 4.5 V.

The current in this lamp is 0.40 A.

Calculate the energy transferred to the lamp in 5 minutes.

Use the equation

$$E = I \times V \times t$$

(3)

energy transferred = ... J

(Total for question = 6 marks)

Mark Scheme

Q1.

<table>
<tr><th>Question number</th><th>Answer</th><th>Additional guidance</th><th>Mark</th></tr>
<tr><td>(i)</td><td>A description including

as the potential difference (voltage) increases so does the current (1)

idea of gradient of graph decreasing as V increases (1)</td><td>

positive correlation

at a decreasing rate
non-linear
not directly proportional</td><td>(2)
AO3</td></tr>
<tr><th>Question number</th><th>Answer</th><th>Additional guidance</th><th>Mark</th></tr>
<tr><td>(ii)</td><td>Award one mark for each row of the table
<table>
<tr><td></td><td>voltage in V</td><td>current in mA</td></tr>
<tr><td>point P</td><td>1(.00)</td><td>20</td></tr>
<tr><td>point Q</td><td>3.4 ±0.1</td><td>43 ±1</td></tr>
</table></td><td>ignore any units added in the boxes</td><td>(2)
AO2</td></tr>
</table>

Question number	Answer	Additional guidance	Mark
(iii)	substitution (1) (R=) $\frac{4.5}{51(\times 10^{-3})}$ evaluation (1) 88.(2) (Ω)	0.088(2) or 8.8(2) or 0.88(2) or 0.09 seen scores 1 mark 0.088(2) kΩ or 0.09 kΩ scores 2 marks award full marks for correct answer without working	(2) AO2

Question number	Answer	Additional guidance	Mark
(iv)	an explanation linking any three of: identification of resistance increasing (1) heating (of the filament) (1) because of more collisions (1) of electrons (with ions / atoms / other electrons) (1)	temperature increases	(3) AO1

Q2.

Question number	Answer	Additional guidance	Mark
	d.c. - (current) in one direction only (1) a.c. - (current) changes direction (1)	one way both ways	(2) AO1

Q3.

Question number	Indicative content	Mark
	Answers will be credited according to candidate's deployment of knowledge and understanding of the material in relation to the qualities and skills outlined in the generic mark scheme. The indicative content below is not prescriptive and candidates are not required to include all the material which is indicated as relevant. Additional content included in the response must be scientific and relevant. • Chemical energy stored in battery • Transferred to KE in motors • Transferred to GPE as it rises • Thermal energy wasted (at each stage) • Energy transferred to surroundings (at each stage)	(6)

Level	Mark	Descriptor
	0	• No rewardable material.
Level 1	1-2	• Demonstrates elements of physics understanding, some of which is inaccurate. Understanding of scientific ideas lacks detail. (AO1) • Presents an explanation with some structure and coherence. (AO1)
Level 2	3-4	• Demonstrates physics understanding, which is mostly relevant but may include some inaccuracies. Understanding of scientific ideas is not fully detailed and/or developed. (AO1) • Presents an explanation that has a structure which is mostly clear, coherent and logical. (AO1)
Level 3	5-6	• Demonstrates accurate and relevant physics understanding throughout. Understanding of the scientific ideas is detailed and fully developed. (AO1) • Presents an explanation that has a well-developed structure which is clear, coherent and logical. (AO1)

Level	Mark	Additional Guidance	General additional guidance – the decision within levels e.g. - At each level, as well as content, the scientific coherency of what is stated will help place the answer at the top, or the bottom, of that level.
	0	No rewardable material.	
Level 1	1–2	Additional guidance Isolated fact e.g. a description of least one energy store **or** interpretation of diagram without mentioning energy stores or types	Possible candidate responses Chemical energy stored in the battery **or** energy transferred from the battery to the motors and then to the blades. Some energy is lost at each stage.
Level 2	3–4	Additional guidance Description of at least one energy transfer	Possible candidate responses KE (of blades) is transferred to GPE (as the drone rises) **or** (thermal) energy is transferred to the surroundings
Level 3	5–6	Additional guidance Description of two or more energy transfers	Possible candidate responses Chemical energy in the battery is transferred to KE of the blades **AND** Thermal energy is wasted in the motors when they turn.

Q4.

Question number	Answer	Additional guidance	Mark
	voltmeter should be moved (1) (to be) in parallel with the resistor X (1)	voltmeter is in wrong place / (re)connect the voltmeter allow 'voltage' for 'voltmeter' in this context allow across X or equivalent statement answers may be seen on the diagram	**(2)**

Q5.

Question number	Answer	Additional guidance	Mark
	a description including two from: put the coil in the water (1) (electric) current in the wire/coil (1) thermal energy transferred (in the wire) (1)	 allow electricity for electric current heat(energy) in wire / temperature of wire increases/ produces heat/ gives energy/ to heat the water	**(2)**

Q6.

Question Number	Answer	Acceptable answers	Mark
(a)(i)	**C** electrons (1)		**(1)**

Question Number	Answer	Acceptable answers	Mark
(a)(ii)	current (1) potential difference/voltage (1) Note: award one mark if these answers are in the wrong order	amps / A /mA/ amperage/ampage accept rate of flow of charge but, charge flowing is insufficient ignore electricity ie rate of flow of electricity does not score pd / p.d./ volts / V/ mV / kV etc can accept e.m.f / emf just potential is insufficient accept numerical responses with correct unit award one mark for: meter 1 = ammeter NOT ampmeter AND meter 2 = voltmeter NOT voltameter	**(2)**

Question Number	Answer	Acceptable answers	Mark
(b)	substitution 0.4 x 6 x 20 (1) evaluation 48 (J) (1) Ignore any unit given by the candidate	 Ignore power of 10 until evaluation e.g. 1 mark for 4.8 Give full marks for correct answer, no working	**(2)**

Question Number	Answer	Acceptable answers	Mark
(c)	p.d. for current of 0.3 A = 3.0 (V) (1) substitution 3.0 ÷ 0.3 (1) evaluation 10 (Ω) (1) Ignore any unit given by the candidate	3 (V) seen in any calculation is enough for a mark check graph if no other mark 3 ÷ 0.3 gains two marks 0.3 ÷ 3 (= 0.1) gains 1 mark (for 3 V) or bald 0.1 scores 1 mark (for 3V) Allow clear ecf from incorrect reading from graph for maximum 2 marks ie their reading ÷ 0.3 but 0.3 ÷ 0.3 does NOT score unless 0.3 written on graph Give full marks for correct answer, no working DO NOT award any marks for POT error where there is no working.	**(3)**

(Total for Question =8 marks)

Q7.

Question Number:	Answer	Additional guidance	Mark
	a comment that makes reference to any three of the following points: • idea that the current increases with the p.d. /voltage (1) • until (current) reaches a constant value (1) • the current is not directly proportional to p.d. (1) • uses idea that the values do not go up in equal steps / does not show doubling	(staying) at 0.13(A)	**(3)** AO 3 2a AO 3 2b

Q8.

Question number	Answer	Additional guidance	Mark
	<table><tr><th>part of plug</th><th>safety feature</th></tr><tr><td>cable grip</td><td>✓</td></tr><tr><td>earth wire</td><td>✓</td></tr><tr><td>fuse</td><td>✓</td></tr><tr><td>live wire</td><td></td></tr><tr><td>neutral wire</td><td></td></tr></table>	Note that the tick next to cable grip is already in the grid more than two additional ticks deduct one mark for each incorrect tick.	**(2)**

Q9.

Question Number:	Answer	Additional guidance	Mark
(i)	substitution (1) (P)= 0.12 x 0.24 evaluation (1) 0.029 (W)	 accept 0.03 (W), 0.0288(W) 0.028 (W) power of ten error is awarded 1 mark award full marks for the correct answer without working	**(2)** AO 2 1

Question Number:	Answer	Additional guidance	Mark
(ii)	chooses /uses (1) E= V x I x t evaluation (1) 1.4 (J)	E =0.3 x0.13 x35 accept an answer that rounds to 1.4 (J) e.g. 1.365(J) a maximum of 1 mark is awarded in the case of a power of ten error award full marks for the correct answer without working	(2) AO 2 1

Question Number:	Answer	Additional guidance	Mark
(iii)	substitution (1) (Q)=0.13 x 35 evaluation (1) 4.6 (C)	 accept an answer that rounds to 4.6 e.g. 4.55 or in this context allow 4.5 power of ten error is awarded 1 mark award full marks for the correct answer without working	(2) AO 2 1

Q10.

Question Number	Answer	Additional guidance	Mark
(i)	24 (Ω)		(1) AO1.2

Question Number	Answer	Additional guidance	Mark
(ii)	substitution (1) (V=) 0.50 x 12 evaluation (1) 6.0 (V)	 accept 6 award full marks for the correct answer without working	(2) AO2.1

Question Number	Answer	Additional guidance	Mark
(iii)	time converted to s (1) 300 (s) substitution (1) (E=) 0.4 x 4.5 x 5 (x60) evaluation (1) 540 (J)	 accept 5 x 60 seen 0.4 x 4.5 x 300 scores first 2 marks 9 (J) scores 2 marks (no conversion to seconds) 540 to any other power of ten scores 2 marks award full marks for the correct answer without working	(3) AO2.1