Questions

Q1.

Figure 20 shows some of the apparatus that students use to determine the resistance of a piece of iron wire.

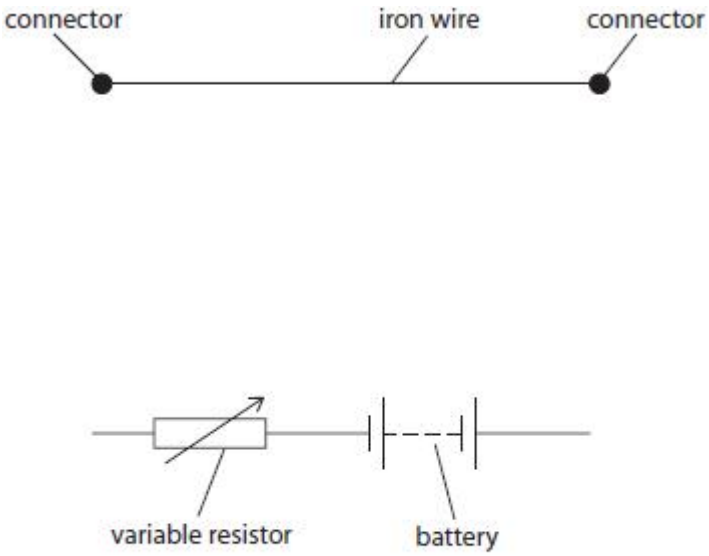

Figure 20

Connecting wires, a voltmeter and an ammeter are added.

The students extend the investigation to determine how the resistance of the iron wire changes with its length.

(i) Give the name of **one** additional piece of apparatus the students would need.

(1)

.....

(ii) Figure 21 shows a graph of the results.

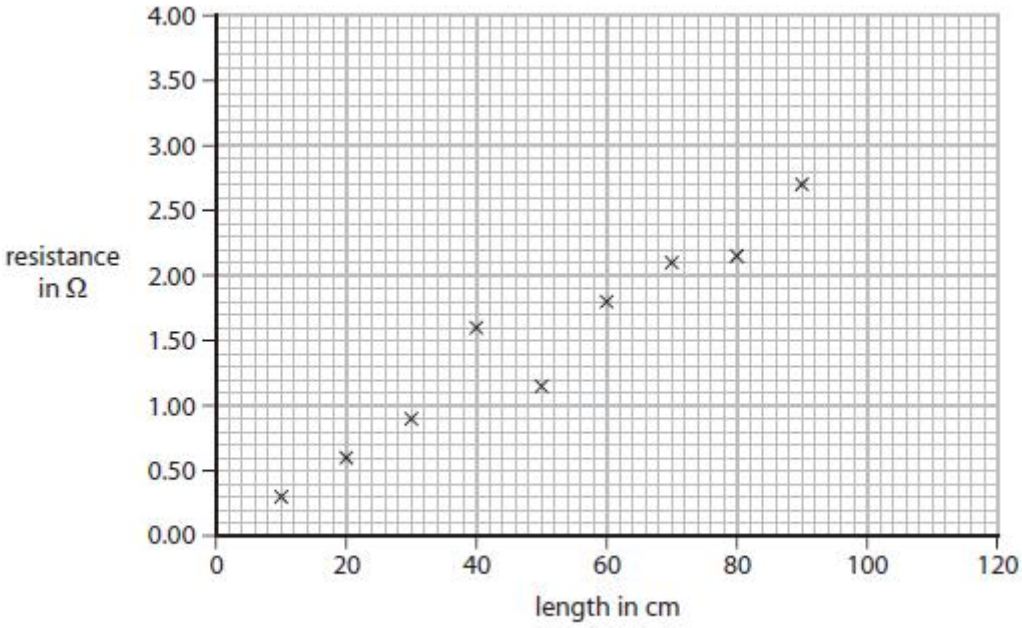

Figure 21

Draw a straight line of best fit on Figure 21.

(1)

(iii) Use Figure 21 to estimate the resistance of a 100 cm length of the iron wire.

(1)

resistance = ... Ω

(iv) The variable resistor shown in Figure 20 is used to prevent the iron wire from becoming too hot.
Explain how the variable resistor is used to prevent the iron wire from becoming too hot.

(2)

.....

.....

.....

.....

(Total for question = 5 marks)

Q2.

A torch has a battery and a bulb.

The current in its circuit is 0.08 A.

Calculate the amount of charge passing a point in this circuit in 2 minutes.

(3)

charge = ... coulombs

Q3.

A technician investigates the potential difference (voltage) across an electrical heater.

This circuit diagram shows the circuit the technician uses.

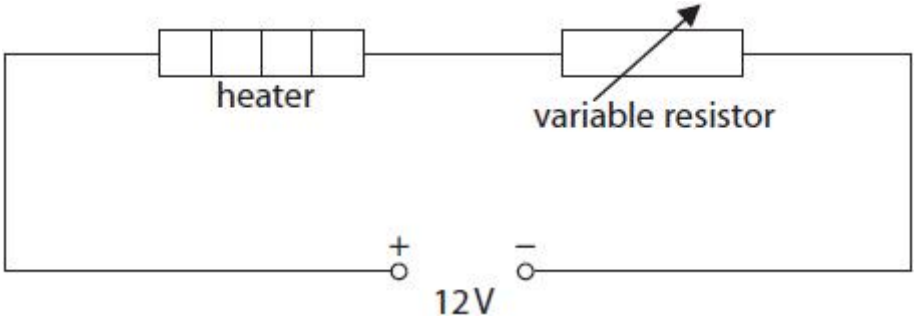

(i) Add a voltmeter to the circuit which will measure the potential difference (voltage) across the heater.

(2)

(ii) The resistance of the heater is 15 Ω.

The current in the heater is 0.56 A.
Calculate the potential difference (voltage) across the heater.

(2)

potential difference = ... V

(iii) The technician changes the value of the variable resistor.

She measures the new voltage across the heater and the new current in it.
Here are her results:

voltage = 6.0 V current = 0.40 A.

Calculate the amount of electrical energy transferred in 30 s by the heater.

(2)

energy transferred = ... J

(iv) The total energy supplied by the battery in 30 s is 144 J.

Explain why your answer in (iii) is not the same as the total energy supplied by the battery.

(2)

.....

.....

.....

.....

Q4.

The graphs show how the current in a component changes with the voltage applied across the component.

Draw a line from each component to its correct graph.

(2)

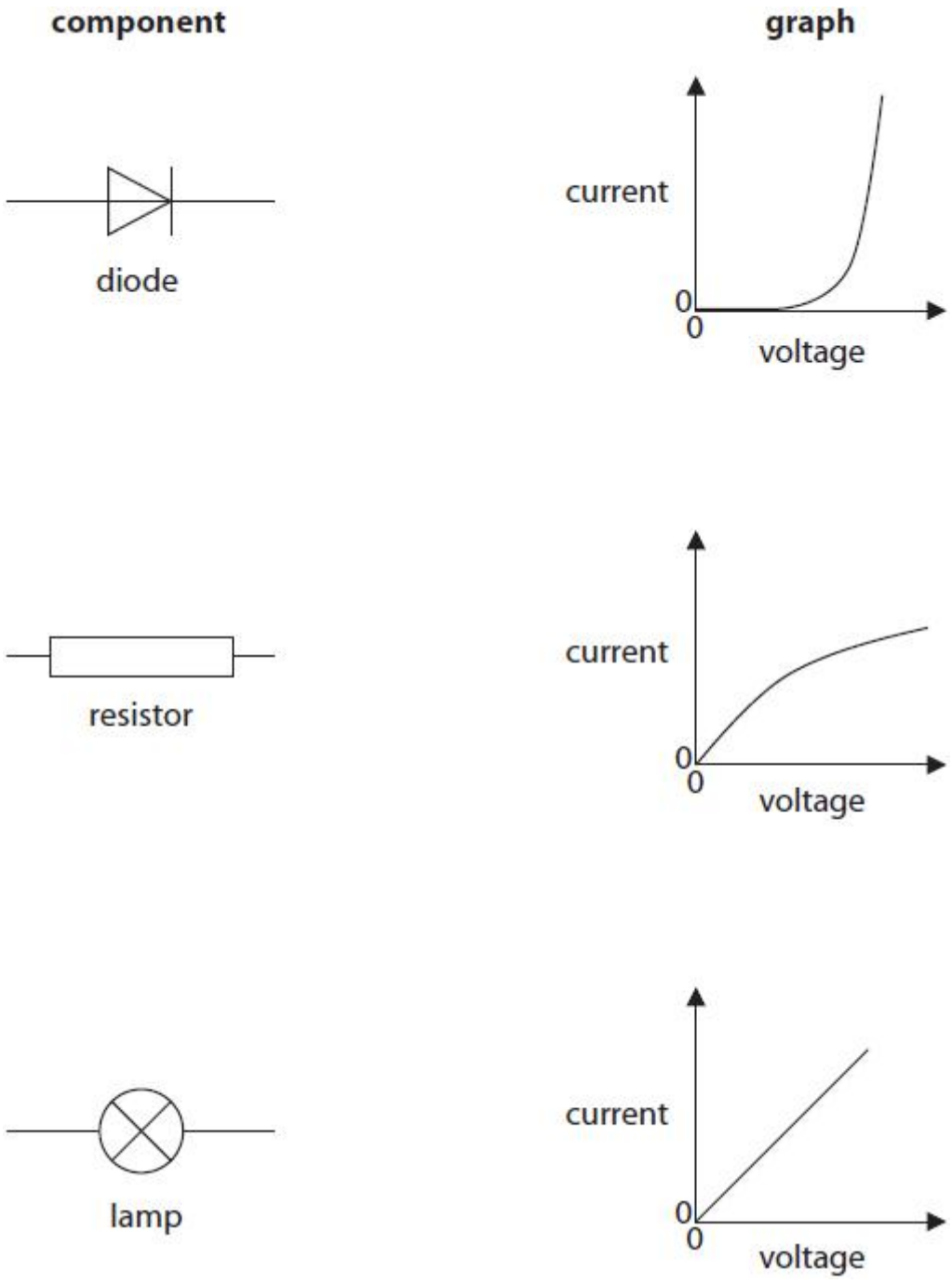

Q5.

Figure 10 shows a circuit used to light a lamp.

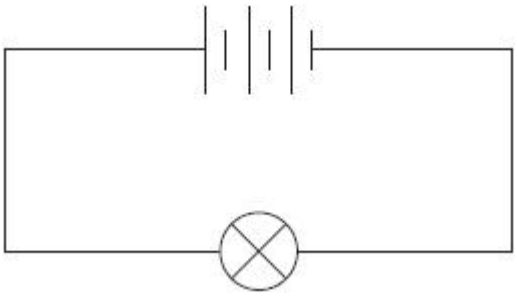

Figure 10

(i) State **two** things you could do to the circuit to make the lamp dimmer.

(2)

1 .....

.....

2 .....

.....

(ii) The energy transferred by the lamp in 20 s is 18 J.

Calculate the power of the lamp.
State the unit.

(4)

power of the lamp = ...

unit = ...

(iii) The potential difference across the lamp is 4.2 V.

The current in the lamp is then 0.19 A.
Calculate the resistance of the lamp.

(3)

resistance of the lamp = ... Ω

(Total for question = 9 marks)

Q6.

This question is about electrical circuits.

Draw **one** straight line from each circuit symbol to its description.

(3)

circuit symbol

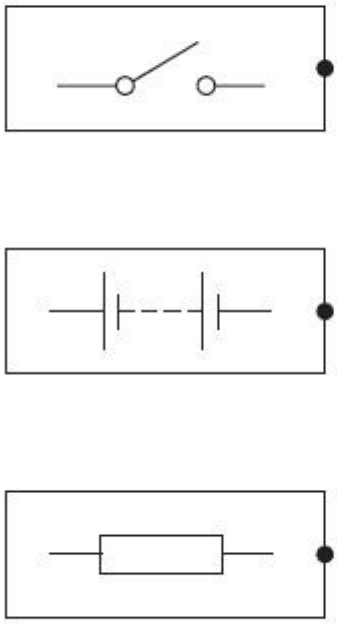

description

battery

LED

switch

resistor

(Total for question = 3 marks)

Q7.

Figure 3 shows the parts in an electrical circuit.

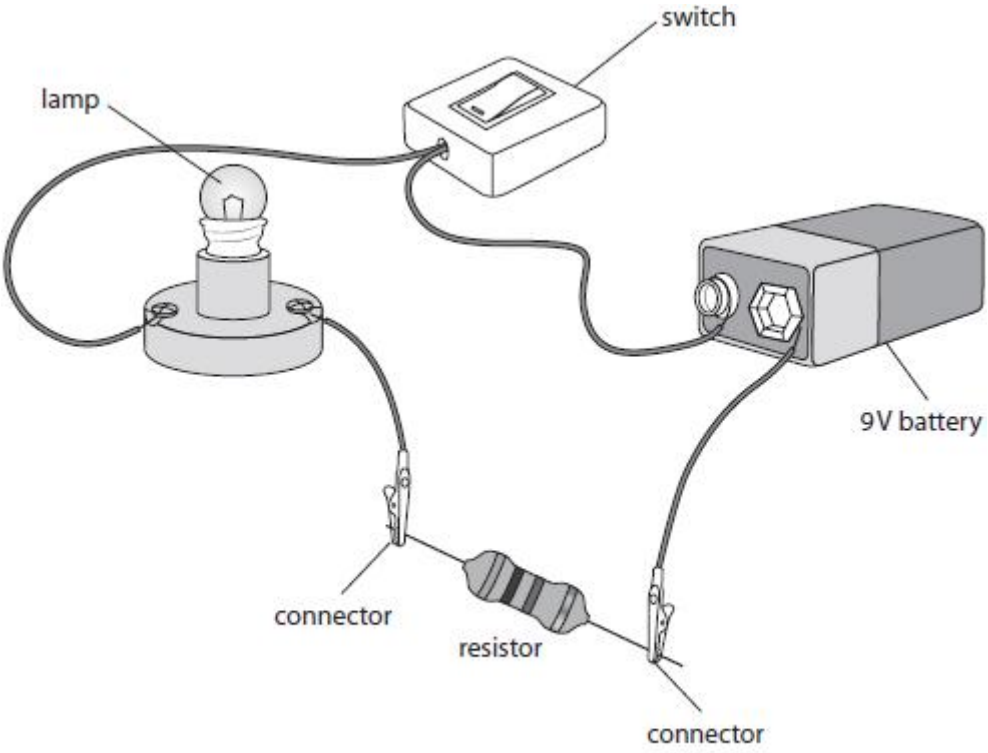

Figure 3

Draw the circuit diagram of this electrical circuit in the space provided.

The battery symbol and some of the connecting wires have been drawn for you.

(4)

circuit diagram

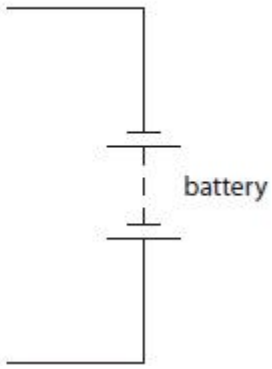

(Total for question = 4 marks)

Q8.

Figure 20 shows some of the apparatus that students use to determine the resistance of a piece of iron wire.

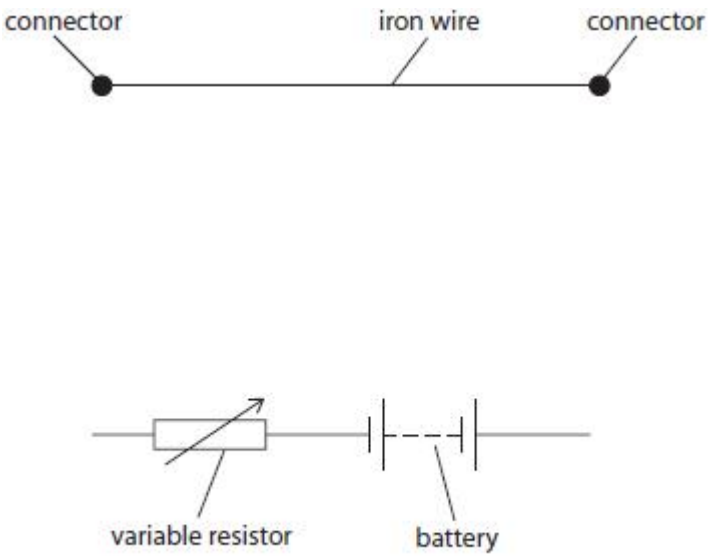

Figure 20

Add connecting wires, a voltmeter and an ammeter to complete the circuit in Figure 20 so that the students can determine the resistance of the piece of iron wire.

(2)

(Total for question = 2 marks)

Q9.

A student is given a low voltage power supply and 1 m of resistance wire.

The student uses these and other pieces of equipment to measure the resistance of just 50 cm of the resistance wire.

Draw a diagram of the circuit that the student should use.

Your circuit diagram should identify the pieces of equipment that the student uses.

(3)

(Total for question = 3 marks)

Q10.

Figure 1 shows an electrical circuit.

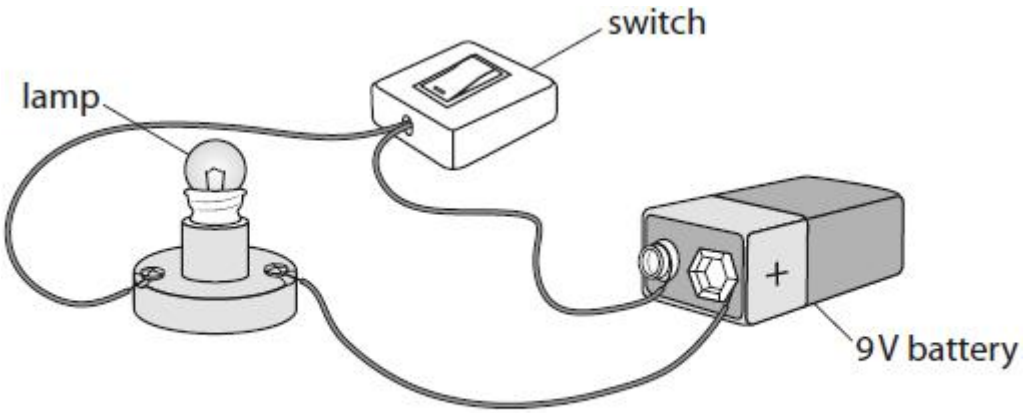

Figure 1

Draw a circuit diagram of the electrical circuit in Figure 1 in the space below.

(4)

(Total for question = 4 marks)

Mark Scheme

Q1.

Question number	Answer	Additional guidance	Mark
(i)	one from (1) metre rule / metre stick / ruler / (measuring) tape / crocodile clip / other clip / wire cutters / pliers / sliding contact jockey / more (iron) wire	accept scissors ignore additional electrical devices such as ohmmeter / multimeter	(1) AO3

Question number	Answer	Additional guidance	Mark
(ii)	(ii) Figure 4 shows a graph of the results. 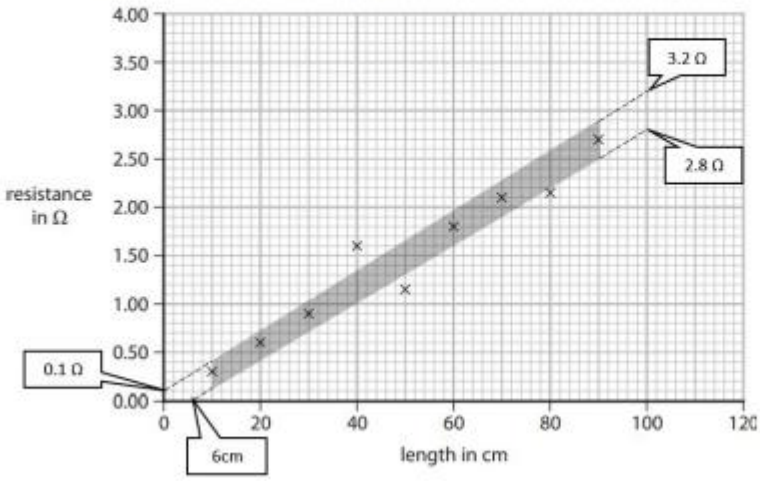 	accept any straight line within the shaded range shown judge by eye. ignore extrapolation	(1) AO2

Question number	Answer	Additional guidance	Mark
(iii)	any number between 2.7 and 3.3 inclusive	allow ecf from (ii) ±0.1 Ω	(1) AO2

Question number	Answer	Additional guidance	Mark
(iv)	explanation linking any **two** from: (variable) resistor increases the resistance (of the circuit) (1) (therefore) keeps the current constant / small(er) (1) because **current** increases temperature of the (iron) wire (1)	accept flow of electrons / charge for current reduces current / limits the current ignore slows the current / charge accept current heats up (iron) wire accept for two marks: adjust variable resistor to keep current constant / small	**(2)** **AO1**

Q2.

Question Number	Answer	Acceptable answers	Mark
	Conversion to correct units: 120 seen anywhere (1) Substitution: 0.08 x 120 (1) Evaluation: 9.6 (C) (1) accept 10 C	Allow full marks for correct answer with no working seen. 0.08 x 2 gains 1 mark for sub of their time into correct eq'n 0.16 (C) gains 2 marks (only mistake is not converting time to seconds) accept any power of 10 error for 2 marks e.g. 960 (C)	**(3)**

Q3.

Question Number	Answer	Acceptable answers	Mark
(i)	(correct) voltmeter symbol seen anywhere (1) voltmeter symbol connected in parallel / across heater (1)	accept symbols that are attempts at circles. accept line through symbol accept for second mark: any symbol or diagram of meter or box provided it is just from one side of the heater to the other	**(2)**

Question Number	Answer	Acceptable answers	Mark
(ii)	Substitution (into V = I x R) V = 0.56 x 15 (1) Evaluation = 8.4 (V) (1)	Allow full marks for correct answer with no working shown accept any power of 10 error for 1 mark e.g. 84 (V) or 0.84 (V) scores 1 mark accept rounding to 8 (V) for both marks	**(2)**

Question Number	Answer	Acceptable answers	Mark
(iii)	Substitution Energy = 6.0 x 0.40 x 30 (1) Evaluation 72(J) (1)	accept any power of 10 error for 1 mark e.g. 720 or 7200 (J) scores 1 mark Allow full marks for correct answer with no working shown	**(2)**

Question Number	Answer	Acceptable answers	Mark
(iv)	An explanation linking any two from: (there is the same) current in the (variable) resistor/ wires (1) (so) energy is {transferred/used/goes to/ lost/ wasted} in the {(variable) resistor/wires} (1) (so) {(variable) resistor / wires} gains/loses thermal energy (1)	 accept there is a p.d. across the (variable) resistor or {p.d./voltage} across heater is different to battery {p.d./voltage} ignore references to voltmeter and heater ignore 'energy wasted as heat' without qualification accept {resistor/wires} {heats/warms} (up) gains 1 mark energy lost in (variable) {resistor/ wires} as heat gains both marks	**(2)**

Q4.

Question Number	Answer	Acceptable answers	Mark
	Connecting lines as shown 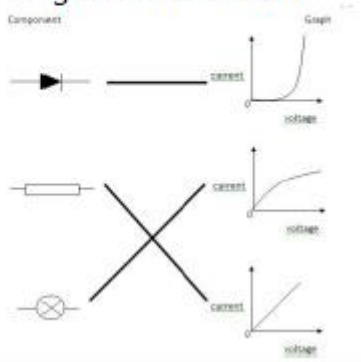 (2)	all 3 for 2 marks allow one mark if one or two lines correct more than one line from any component or to any graph is incorrect, so a maximum of 1 mark is possible	**(2)**

Q5.

Question number	Answer	Additional guidance	Mark
(i)	Any two from: • remove one or two of the cells (1) • put a resistor in (series with lamp) (1) • leave on for a long time (1)	reverse a cell	(2)

Question number	Answer	Additional guidance	Mark
(ii)	recall $P = \frac{E}{t}$ (1) substitution (1) $\frac{18}{20}$ evaluation (1) 0.9 W (1)	allow 1 mark for a correct substitution of values into an incorrect equation independent mark watt(s) award full marks for correct answer without working	(4)

Question number	Answer	Additional guidance	Mark
(iii)	substitution into V = IR (1) $4.2 = 0.19 \times R$ rearrangement (1) $\frac{4.2}{0.19}$ evaluation (1) 22 (Ω)	award full marks for correct answer without working 22.1(Ω)	(3)

Q6.

Question number	Answer	Additional guidance	Mark
	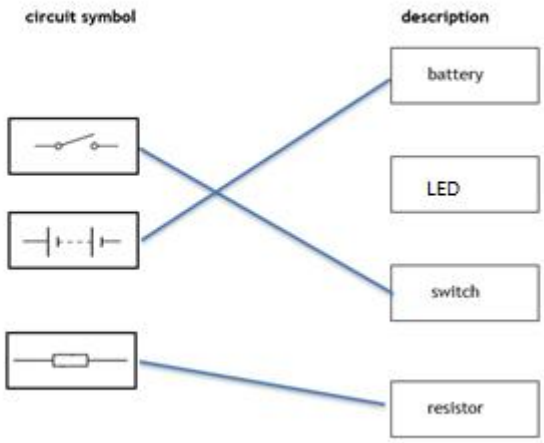	1 mark for each correct line. more than one line to or from any box loses the mark for that symbol.	(3) AO1

Q7.

Question number	Answer	Additional guidance	Mark
	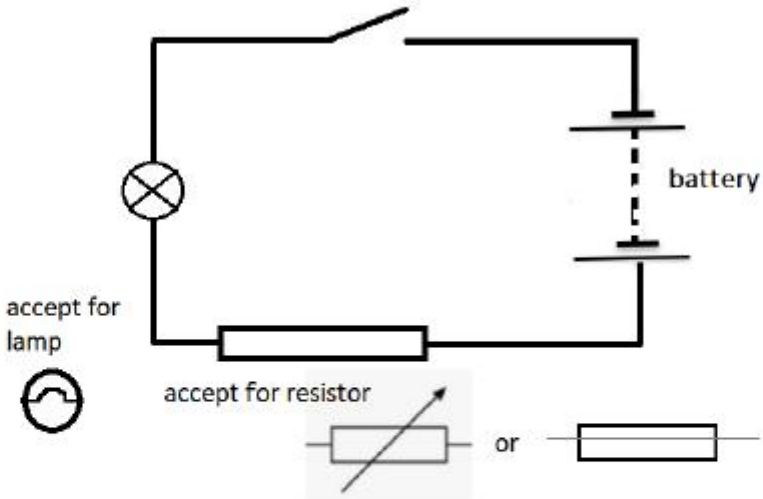 lamp symbol (1) switch symbol (1) open or closed resistor symbol (1) complete series circuit, with any circuit symbol(s) connected to the battery (1)	ignore any additional symbols ignore cells / batteries	(4) AO1

Q8.

Question number	Answer	Additional guidance	Mark
	voltmeter connected in parallel with the iron wire / any part of the iron wire (1) ammeter connected in series with the iron wire (1) example: 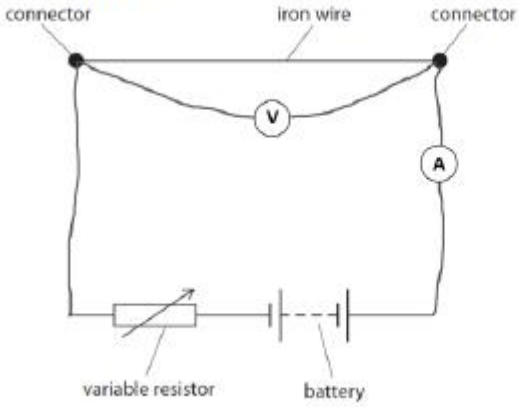 	accept any recognisable symbols. accept symbol drawn over connecting wire do not credit the same type of meter shown in contradictory positions	**(2)** **AO1**

Q9.

Question number	Answer	Additional guidance	Mark
	a diagram of a circuit including **all** of the following: power supply / cell(s) / battery, identifiable resistance wire an ammeter a voltmeter (1)	accept symbols accept ohmmeter with resistance wire only ignore lamp(s) / additional resistors	**(3)** **A02**
	plus any **two** from ammeter in series (1) voltmeter in parallel (1)		
		allow ohmmeter (across wire) instead of ammeter and voltmeter for 1 mark	
	indication of tapping off / using 50cm of resistance wire (1)	e.g. (crocodile) clips	

Q10.

Question number	Answer	Additional guidance	Mark
	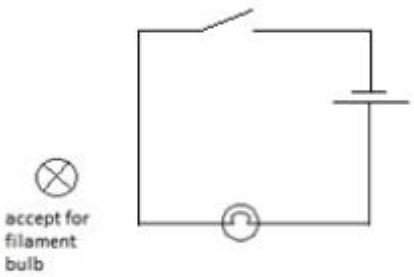 battery/cell symbol (1) lamp symbol (1) switch symbol (1) then complete series circuit shown (1)	ignore polarity of battery	**(4)** **AO3**