Questions

Q1.

Figure 1 shows a circuit containing a battery and **four** other components.

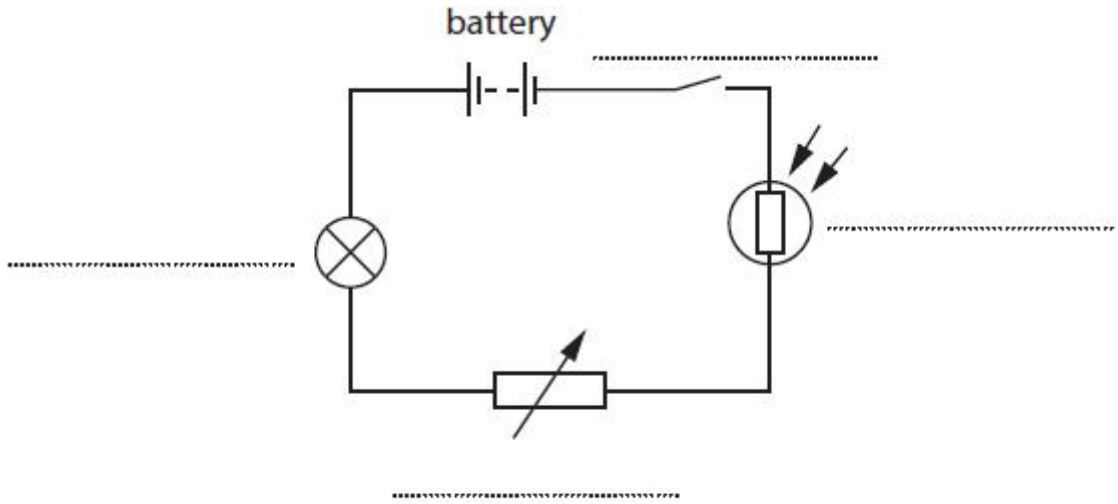

Figure 1

Label the **four** components in Figure 1, using words from the box.

ammeter	lamp	LDR
switch	thermistor	variable resistor

(4)

(Total for question = 4 marks)

Q2.

Some questions must be answered with a cross in a box (☒). If you change your mind about an answer, put a line through the box (☒) and then mark your new answer with a cross (☒).

Figure 1 shows a lamp in a circuit.

The lamp is switched on.

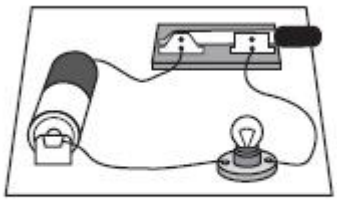

Figure 1

(i) The current in the lamp is a flow of

(1)

☐ **A** atoms
☐ **B** electrons
☐ **C** neutrons
☐ **D** protons

(ii) The current in the lamp is 0.21 A.

Calculate the charge that flows through the lamp in a time of 300 s.
State the unit of charge.
Use the equation

charge = current x time

charge = ... unit .....

(3)

(Total for question = 4 marks)

Q3.

Answer the question with a cross in the box you think is correct (☒). If you change your mind about an answer, put a line through the box (☒) and then mark your new answer with a cross (☒).

Figure 20 is a circuit diagram.

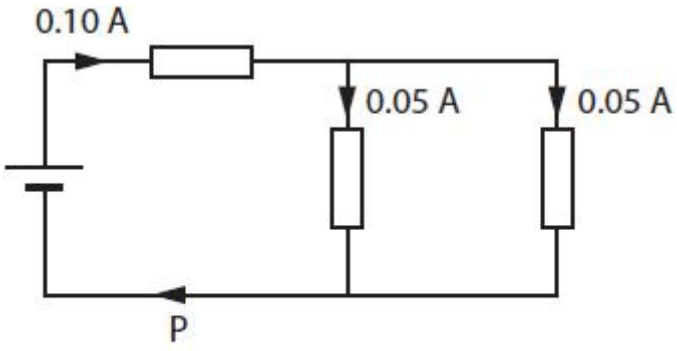

Figure 20

The current at P is

(1)

- ☐ **A** 0.05 A
- ☐ **B** 0.10 A
- ☐ **C** 0.15 A
- ☐ **D** 0.20 A

(Total for question = 1 mark)

Q4.

The nucleus of an atom contains

(1)

- ☐ **A** only electrons
- ☐ **B** only neutrons
- ☐ **C** electrons and neutrons
- ☐ **D** protons and neutrons

(Total for question = 1 mark)

Q5.

A metal wire carries an electric current.

The charge that flows in the wire is made up of

(1)

- ☐ **A** electrons
- ☐ **B** protons
- ☐ **C** positive ions
- ☐ **D** negative ions

(Total for question = 1 mark)

Q6.

Answer the question with a cross in the box you think is correct (☒). If you change your mind about an answer, put a line through the box (☒) and then mark your new answer with a cross (☒).

Figure 14 shows a saucepan of milk being heated on an electric cooker.

© Por Fabian Ponce Garcia/Shutterstock

Figure 14

The wiring for the cooker has safety features.

(i) Which of these wires would help to protect a person from getting an electric shock if a fault developed in the cooker?

(1)

- ☐ **A** earth
- ☐ **B** live
- ☐ **C** negative
- ☐ **D** positive

(ii) Explain how a fuse can prevent overheating of the wiring for the cooker.

(2)

.....

.....

.....

.....

(Total for question = 3 marks)

Q7.

Answer the question with a cross in the box you think is correct ☒ . If you change your mind about an answer, put a line through the box ☒ and then mark your new answer with a cross ☒ .

Which row in the table describes the way that ammeters and voltmeters should be connected with a component in a circuit?

(1)

	ammeter	voltmeter
☐ A	in parallel	in parallel
☐ B	in parallel	in series
☐ C	in series	in parallel
☐ D	in series	in series

(Total for question = 1 mark)

Q8.

This question is about using the mains electricity supply.

Figure 10 shows the inside of a mains plug.
The neutral wire is labelled.

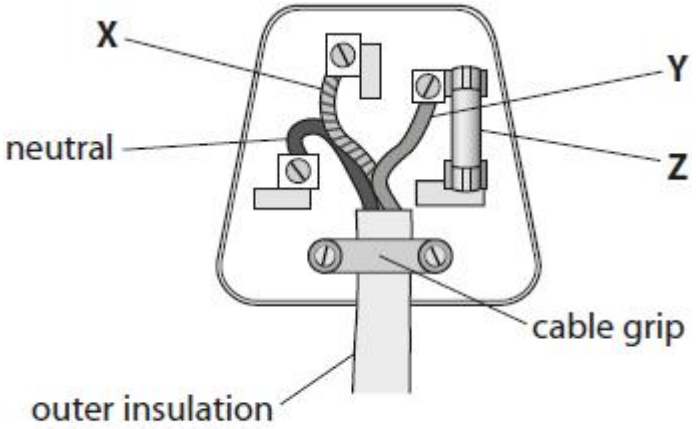

Figure 10

(i) State the name of wire **X** and the name of wire **Y**.

(2)

wire **X** .....

wire **Y** .....

(ii) State the name of component **Z**.

(1)

component **Z** .....

(Total for question = 3 marks)

Q9.

Answer the question with a cross in the box you think is correct ☒ . If you change your mind about an answer, put a line through the box ☒ and then mark your new answer with a cross ☒ .

Figure 17 shows two different types of the same circuit component.

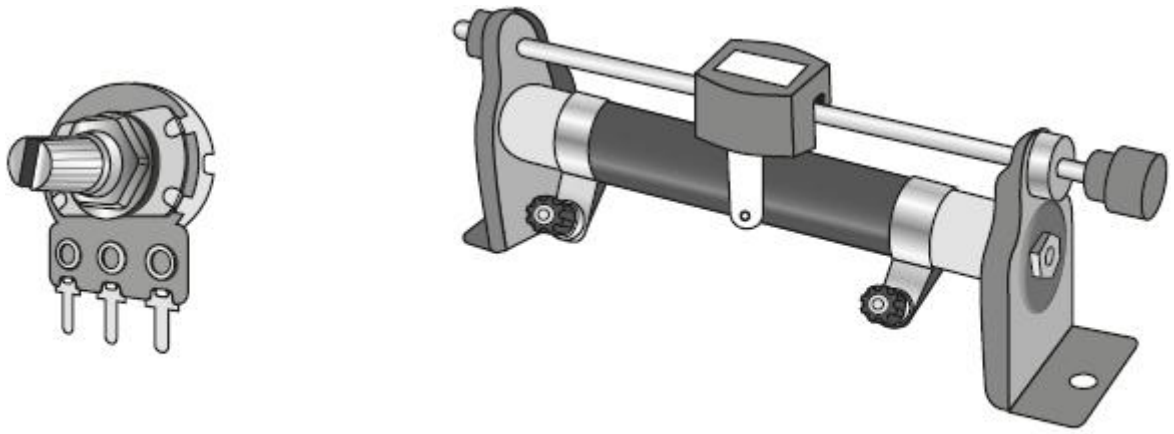

Figure 17

What is the name of this circuit component?

(1)

☐ **A** diode

☐ **B** light dependent resistor

☐ **C** thermistor

☐ **D** variable resistor

(Total for question = 1 mark)

Q10.

* Figure 18 shows a battery connected to a filament lamp.

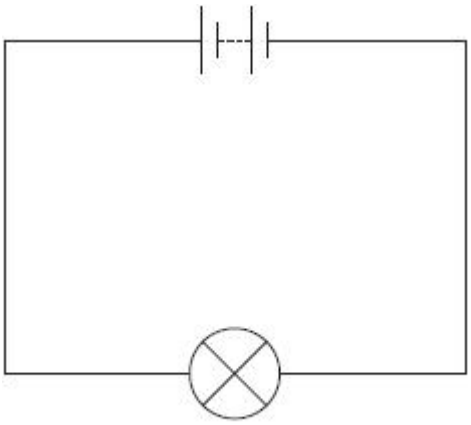

Figure 18

Explain, in terms of the movement of charged particles, how energy is transferred from the battery, through the lamp, to the surroundings.

(6)

.....

.....

.....

.....

.....

.....

.....

.....

.....

.....

.....

.....

.....

.....

(Total for question = 6 marks)

Mark Scheme

Q1.

Question	Answer	Additional guidance	Mark
	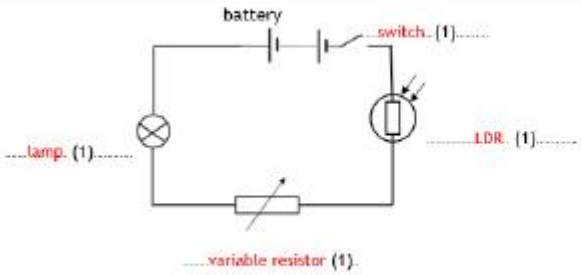	**accept** lines drawn from the words in the box to the spaces **accept** bulb for lamp	**(4)** **AO1.1**

Q2.

Question number	Answer	Additional guidance	Mark
(i)	**B** electrons A C and D are incorrect because they do not move through a conductor to create an electric current.		**(1)** **AO1**

Question number	Answer	Additional guidance	Mark
(ii)	substitution (1) (charge =) 0.21 x 300 evaluation (1) (charge =) 63 unit (1) coulombs	 award full marks for the correct answer without working independent mark C(oulombs) c As	**(3)** **AO2** **AO1**

Q3.

Question	Answer	Mark
	The only correct answer is B ***A, C*** *and* ***D*** *are not correct because they do not add up to the current entering the junction AND they do not equal the current coming from the battery*	**(1)** **AO1.1**

Q4.

Question number	Answer	Mark
	D protons and neutrons	**(1)**

Q5.

Question number	Answer	Mark
	A electrons	**(1)**

Q6.

Question	Answer	Mark
(i)	**A** earth ***B, C and D*** *would not help to protect from shock*	**(1)** **AO1.1**

Question	Answer	Additional guidance	Mark
(ii)	an explanation linking **two** from:	ignore references to p.d./voltage current is greater than fuse	**(2)** **AO1.1**
	if the current is too large (1) (fuse) melts/breaks (1) switches off (current/circuit) (1)	value/size/rating blows stops current OR stops flow of charge	

Q7.

Question number	Answer	Mark
	C ammeter in series with component, voltmeter in parallel Only option C is correct for both the ammeter and the voltmeter	**(1)** **AO1**

Q8.

Question number	Answer	Additional guidance	Mark
i	Wire X .....earth.....(1) Wire Y .....live..... (1)	accept 'life'	**(2)** **AO1**

Question number	Answer	Additional guidance	Mark
ii	Component Z ….fuse…… (1)		(1) AO1

Q9.

Question number	Answer	Mark
	D variable resistor Options A, B and C are all wrong identifications with both the circuit components shown	(1) AO1

Q10.

Question Number	Answer	Mark
	Answers will be credited according to candidate's deployment of knowledge and understanding of the material in relation to the qualities and skills outlined in the generic mark scheme. The indicative content below is not prescriptive and candidates are not required to include all the material which is indicated as relevant. Additional content included in the response must be scientific and relevant. • the batteries store energy as chemical energy • the energy is transferred to electrons to make them flow/move • the current is a flow of electrons • the electrons flow through the metal/filament • the electrons collide with the ions in the lattice • the collisions make the ions vibrate more • the increased vibrations makes the lattice/filament hotter • the heat energy is dissipated to the surroundings • the ions give out/emit light	**(6)**

Descriptor
• No rewardable material.
• Demonstrates elements of physics understanding, some of which is inaccurate. Understanding of scientific ideas lacks detail. (AO1) • Presents an explanation with some structure and coherence. (AO1)
• Demonstrates physics understanding, which is mostly relevant but may include some inaccuracies. Understanding of scientific ideas is not fully detailed and/or developed. (AO1) • Presents an explanation that has a structure which is mostly clear, coherent and logical. (AO1)
• Demonstrates accurate and relevant physics understanding throughout. Understanding of the scientific ideas is detailed and fully developed. (AO1) • Presents an explanation that has a well-developed structure which is clear, coherent and logical. (AO1)

Level	Mark	Additional Guidance	General additional guidance – the decision within levels Eg - At each level, as well as content, the scientific coherency of what is stated will help place the answer at the top, or the bottom, of that level.
	0	No rewardable material.	
Level 1	1–2	Additional guidance unlinked statements	Possible candidate responses Particles move through the wire Batteries store energy Lamp gives off heat
Level 2	3–4	Additional guidance Limited explanation **linking** facts about particles OR **linking** facts about energy transfers	Possible candidate responses Electrons move through the wire/lamp OR The particles moving in the wire are electrons OR Particles collide in the wire OR Chemical energy (stored) in battery OR Energy dissipated / {released as light or thermal} energy in surroundings OR Energy is transferred electrically (from battery to lamp)