Questions

Q1.

Figure 2 shows an ammeter that can read up to 5 A.

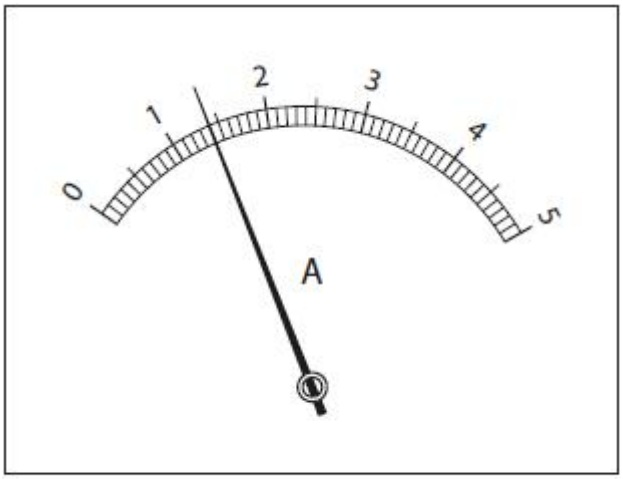

Figure 2

State the value of the current shown on the ammeter in Figure 2.

(1)

current = ... A

(Total for question = 1 mark)

Q2.

Figure 1 gives the names of three atomic particles and some descriptions of the charge on the particles and their position in the atom.

Draw one straight line from each atomic particle to its correct description.

(3)

particle	description
	negative charge inside the nucleus
proton	no charge inside the nucleus
electron	positive charge inside the nucleus
neutron	negative charge outside the nucleus
	no charge outside the nucleus

Figure 1

(Total for question = 3 marks)

Q3.

* The resistance of a thermistor changes with temperature.

Describe an experiment to investigate how the resistance of a thermistor changes with temperature.

You may draw a diagram to help with your answer.

(6)

.....

.....

.....

.....

.....

.....

.....

.....

.....

.....

.....

.....

(Total for question = 6 marks)

Q4.

Figure 12 shows a graph of current against potential difference for an electrical component.

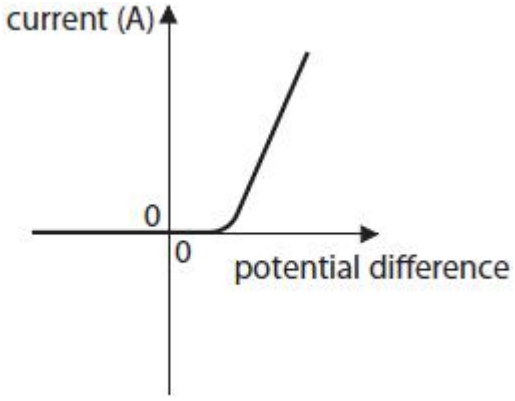

Figure 12

Which electrical component will show this variation of current with potential difference?

(1)

- ☒ **A** thermistor
- ☒ **B** low value resistor at constant temperature
- ☒ **C** high value resistor at constant temperature
- ☒ **D** diode

(Total for question = 1 mark)

Q5.

Answer the question with a cross in the box you think is correct ☒. If you change your mind about an answer, put a line through the box ☒ and then mark your new answer with a cross ☒.

Figure 4 shows the current flowing into and out of point P in part of a circuit.

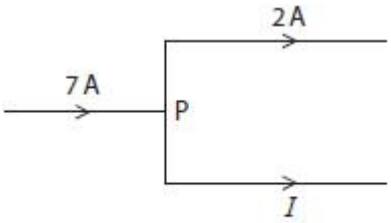

Figure 4

Which of these is the value of current *I*?

(1)

☐ **A** 2 A
☐ **B** 5 A
☐ **C** 7 A
☐ **D** 9 A

(Total for question = 1 mark)

Q6.

Answer the question with a cross in the box you think is correct ☒. If you change your mind about an answer, put a line through the box ☒ and then mark your new answer with a cross ☒.

Which of these symbols is used to represent a thermistor in an electrical circuit?

(1)

☐ **A**

☐ **B** 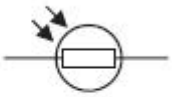

☐ **C**

☐ **D**

(Total for question = 1 mark)

Q7.

Answer the question with a cross in the box you think is correct (☒). If you change your mind about an answer, put a line through the box (☒) and then mark your new answer with a cross (☒).

Figure 2 shows a circuit with a switch, two ammeters and two resistors in series with a cell.

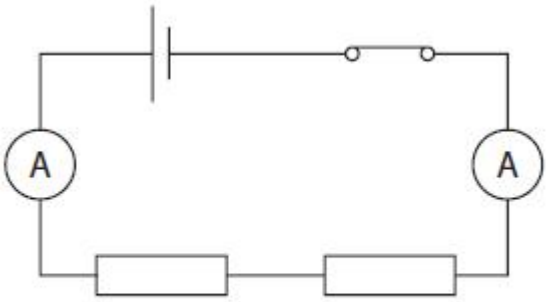

Figure 2

(i) Which of these statements is true for the circuit in Figure 2?

(1)

☐ **A** the switch is in the open position
☐ **B** the ammeters measure the current in the circuit
☐ **C** the resistors are variable resistors
☐ **D** the current supplied by the cell is alternating current (a.c.)

(ii) The resistance of the circuit is increased by adding one resistor to the circuit.
State how increasing the resistance changes the current in the circuit.

(1)

.....

.....

(Total for question = 2 marks)

Q8.

Some questions must be answered with a cross in a box (☒). If you change your mind about an answer, put a line through the box (☒) and then mark your new answer with a cross (☒).

An electric water pump is powered by the 230 V mains supply.

Figure 12 shows the inside of the plug on the cable to the pump.

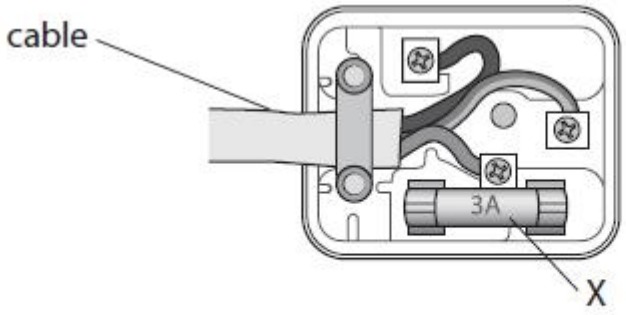

Figure 12

(i) One wire in the plug is the earth wire.

The other two wires are

(1)

- ☒ **A** live and negative
- ☒ **B** live and neutral
- ☒ **C** positive and negative
- ☒ **D** positive and neutral

(ii) Describe the purpose of the component labelled X.

(2)

.....

.....

.....

.....

(Total for question = 3 marks)

Q9.

Answer the question with a cross in the box you think is correct ☒. If you change your mind about an answer, put a line through the box ☒ and then mark your new answer with a cross ☒.

Figure 5 shows a charger for a car battery.

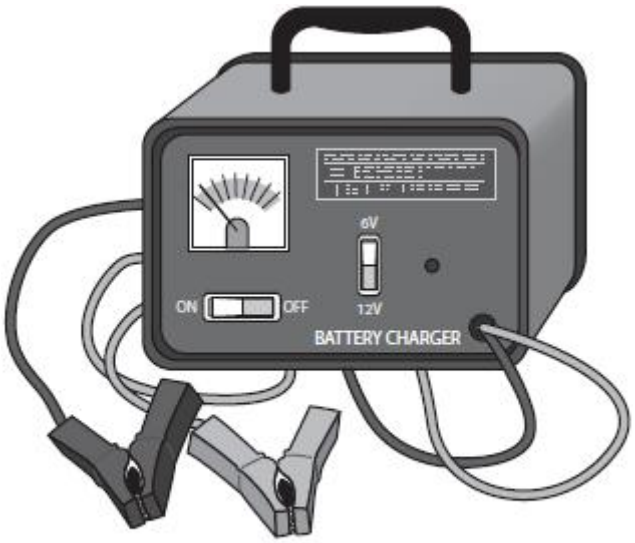

Figure 5

(i) The meter on the battery charger shows the current supplied to a battery.

The meter on the battery charger is

(1)

☒ **A** an ammeter
☒ **B** an ohmmeter
☒ **C** a voltmeter
☒ **D** a wattmeter

(ii) The battery charger supplies a steady current of 2.5 A to the battery.

Calculate the charge flowing to the battery in 8 minutes.
Use the equation

charge = current × time

(2)

charge = ... C

(Total for question = 3 marks)

Q10.

Answer the question with a cross in the box you think is correct ☒. If you change your mind about an answer, put a line through the box ☒ and then mark your new answer with a cross ☒.

Figure 11 shows part of the UK National Grid system for the supply of electricity to homes.

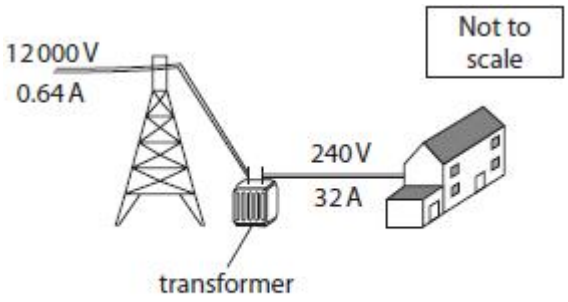

Figure 11

Electricity supplied to homes has a frequency of

(1)

- ☒ **A** 0.02 Hz
- ☒ **B** 20 Hz
- ☒ **C** 50 Hz
- ☒ **D** 500 Hz

(Total for question = 1 mark)

Mark Scheme

Q1.

Question number	Answer	Mark
	1.4 (A)	(1) AO2

Q2.

Question Number	Answer	Mark
	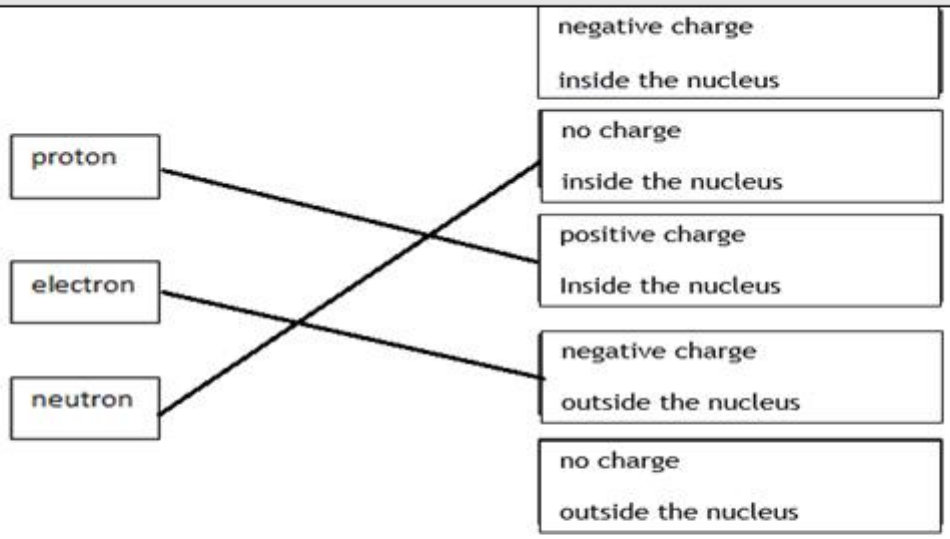 One mark for each correct line. More than one line from a box on the left loses the mark for that box.	(3)

Q3.

Question number	Indicative content	Mark
*	Answers will be credited according to candidate's deployment of knowledge and understanding of the material in relation to the qualities and skills outlines in the generic mark scheme. The indicative content below is not prescriptive and candidates are not required to include all of the material which is indicated as relevant. Additional content included in the response must be scientific and relevant. **A01 (6 marks)** • measure the resistance of the thermistor • use ammeter and voltmeter/ use multimeter set on R • in a circuit • measure temperature of thermistor • using thermometer • use water bath • heater or method of heating • use cool water / room temperature water to start • raise temperature • measure new resistance	**(6)**

Level	Mark	Descriptor
	0	• No rewardable material.
Level 1	1-2	• Demonstrates elements of physics understanding, some of which is inaccurate. Understanding of scientific, enquiry, techniques and procedures lacks detail. (AO1) • Presents a description which is not logically ordered and with significant gaps. (AO1)
Level 2	3-4	• Demonstrates physics understanding, which is mostly relevant but may include some inaccuracies. Understanding of scientific ideas, enquiry, techniques and procedures is not fully detailed and/or developed. (AO1) • Presents a description of the procedure that has a structure which is mostly clear, coherent and logical with minor steps missing. (AO1)
Level 3	5-6	• Demonstrates accurate and relevant physics understanding throughout. Understanding of the scientific ideas, enquiry, techniques and procedures is detailed and fully developed. (AO1) • Presents a description that has a well-developed structure which is clear, coherent and logical. (AO1)

Q4.

Question Number:	Answer	Mark
	D diode **The only correct answer is D** ***A*** *is not correct as for a thermistor, current would increase with potential difference from the origin* ***B*** *is not correct as current against p.d for a resistor gives a straight line from the origin* ***C*** *is not correct as current against p.d for a resistor gives a straight line from the origin*	**(1)** AO 1 1

Q5.

Question number	Answer	Additional guidance	Mark
	B 5 A A, C and D are incorrect repetitions or addition		**(1)** **AO1**

Q6.

Question Number	Answer	Mark
	  The only correct answer is D **A is incorrect** because that is the symbol for a diode **B is incorrect** because that is the symbol for a light dependent resistor **C is incorrect** because that is a symbol for a motor	**(1)**

Q7.

Question Number	Answer	Mark
(i)	**B** the ammeters measure the current in the circuit **A** is incorrect because the switch is in the closed position not open **C** is incorrect because the resistors are fixed resistors not variable **D** is incorrect because the circuit does not have an a.c. power supply the supply is a cell which is d.c.	**(1)** **AO1.1**

Question Number	Answer	Additional guidance	Mark
(ii)	(current in the circuit) decreases (1)	accept reduces/gets smaller/is less/goes down ignore slows down (the current)	**(1)** **AO1.1**

Q8.

Question number	Answer	Additional guidance	Mark
(i)	B live and neutral A , C and D are incorrect because the terms positive and negative are not used in the context of wires in a mains cable.		**(1)** **AO1**

Question number	Answer	Additional guidance	Mark
(ii)	a description that includes any **two** from melts (1) if there is a fault (1) breaks the circuit (1) stops current (1) safety (1)	 blows / breaks if current too large prevents overheating / fire if no other marks scored allow 1 mark for identifying the fuse.	**(2)** **AO1**

Q9.

Question number	Answer	Additional guidance	Mark
i	A an ammeter B, C and D are incorrect because they do not show current		**(1)**

Question number	Answer	Additional guidance	Mark
ii	substitution (1) (Q) = 2.5 x 8 (x60) evaluation (1) 1200 (C)	 allow 20 (C) for 1 mark award full marks for the correct answer without working	**(2)**

Q10.

Question number	Answer	Mark
	C 50 Hz A, B and D are all distracting numbers not matching the frequency of the mains	**(1)** **AO1**