Questions

Q1.

(i) Describe **one** situation where separation of electric charge can create a spark.

(2)

.....

.....

.....

.....

(ii) In a spark, the total charge of 0.22 μC (microcoulombs) flows in 2 ms (milliseconds).

Calculate the average current in that time.

(4)

average current = ... A

(Total for question = 6 marks)

Q2.

(a) A student ties two balloons to a support with some string.
The student rubs both balloons with a dry cloth which gives the balloons a negative charge.
The diagram shows the balloons after they were rubbed.

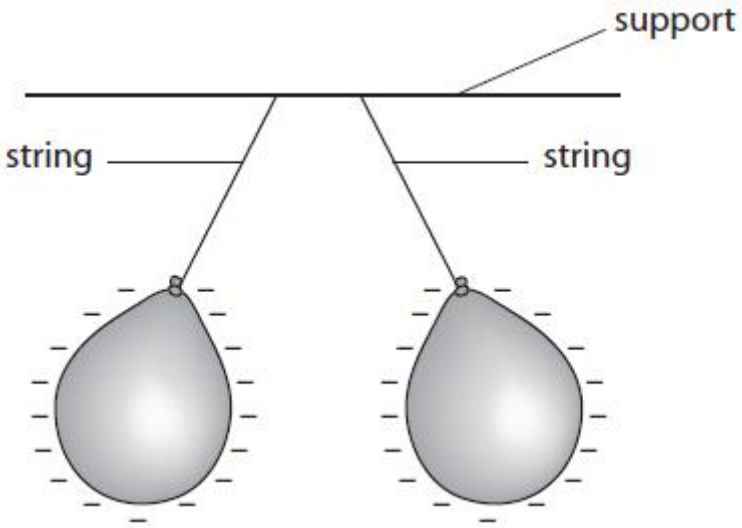

Use words from the box to complete the sentences.

(4)

attract	charge	electrons	negative	neutral
neutrons	positive	protons	repel	support

The balloons ..... each other because they have the same .....

The cloth is left with a ..... charge.

The charged particles that are transferred from the cloth to the balloons are called .....

(b) The diagram shows an electrostatic insecticide spray being used on a plant. The plant is initially uncharged.

Each droplet of spray is given a positive charge.

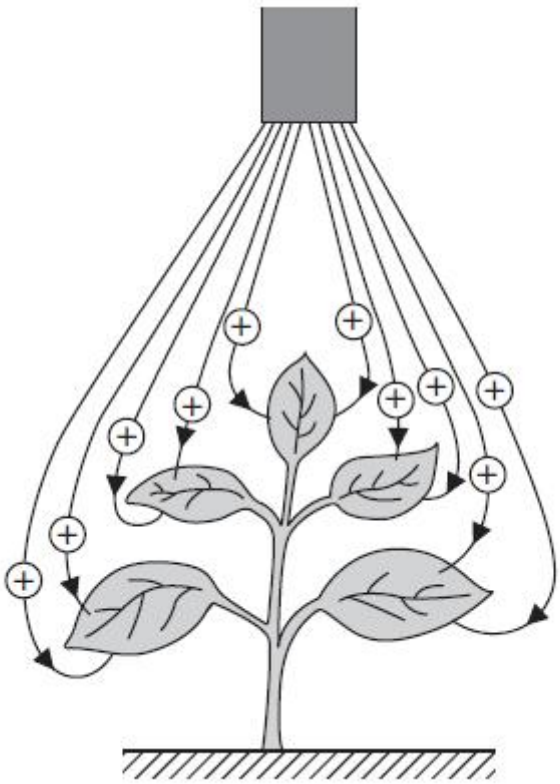

(i) Explain the advantages of using an electrostatic insecticide spray compared to an uncharged

insecticide spray.

(3)

.....

.....

.....

.....

.....

.....

(ii) There is a current of 0.008 A in the sprayer for a time of 10 minutes.
Calculate the charge supplied to the sprayer in this time.

(3)

charge = ... C

(Total for Question = 10 marks)

Q3.

A student investigates resistors connected in series in an electrical circuit.

The student has

- a 3.0 V battery
- a 22 Ω resistor
- a resistor marked X.The student does not know the value of the resistor marked X.

The student decides to measure the potential difference (voltage) across resistor X.

Figure 15 shows the circuit that the student connected.

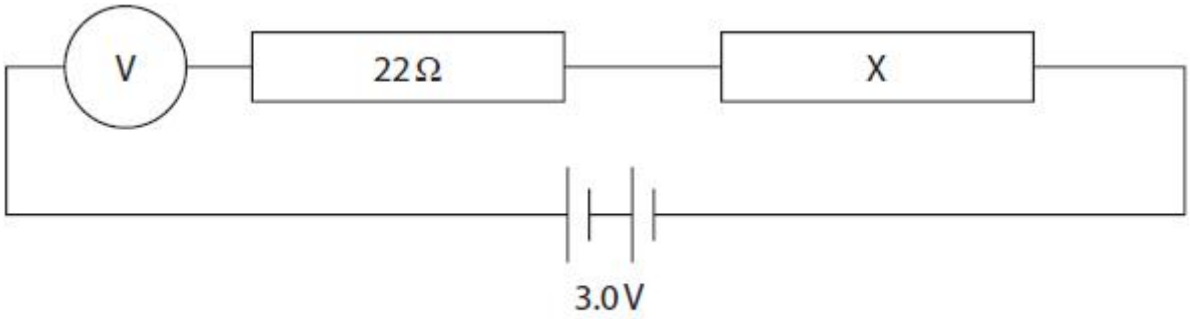

Figure 15

The circuit is connected incorrectly.

The student corrects the mistake.

The voltage across resistor X is 2.1 V.

The circuit is connected to a 3 V battery.

(i) State the value of the voltage across the 22 Ω resistor.

(1)

voltage across 22 Ω resistor = ... V

(ii) The current in resistor X is 0.041 A.

The voltage across resistor X is 2.1 V.
Show that the resistance of resistor X must be about 50 ohms.
Use the equation

$$V = I \times R$$

(2)

(iii) Calculate the power in resistor X when the voltage across X is 2.1 V and the current in resistor X is 0.041 A.

(2)

power = ... W

(iv) Calculate the overall resistance of the 22 ohm resistor and resistor X.

(2)

overall resistance = ... Ω

(v) The current in the circuit is 0.041 A.

The voltage across the battery is 3.0 V.
Calculate the energy transferred in 2 minutes.
Use the equation

$$E = I \times V \times t$$

(2)

energy = ... J

(Total for question = 9 marks)

Q4.

State the frequency of the supply of electricity to homes in the UK (United Kingdom).

(1)

frequency = ... Hz

(Total for question = 1 mark)

Q5.

A car headlamp has a power rating of 55 W when the current in the headlamp is 4.4 A.

(i) State the equation relating power, current and resistance.

(1)

(ii) Calculate the resistance of the headlamp.

(3)

resistance = ... Ω

(Total for question = 4 marks)

Q6.

Another **identical** lamp is added to the circuit, as shown in Figure 20.

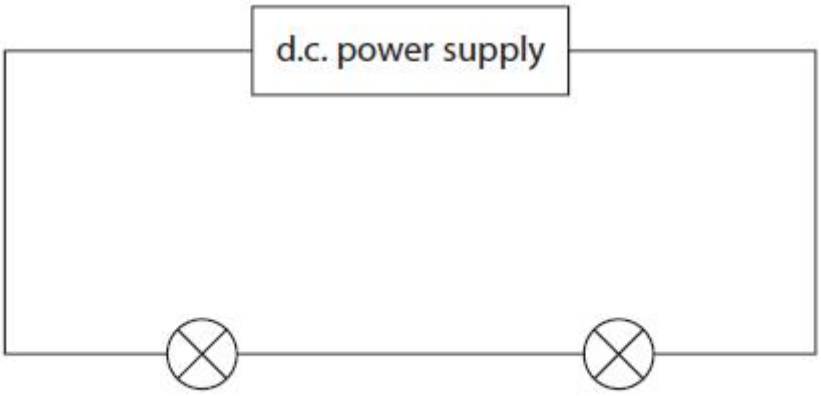

Figure 20

The power supply provides the same potential difference as it provided in the circuit in Figure 19.

State and explain the difference between the brightness of the lamp in Figure 19 and the brightness of a lamp in Figure 20.

(3)

.....

.....

.....

.....

.....

(Total for question = 3 marks)

Mark Scheme

Q1.

Question number	Answer	Additional guidance	Mark
(i)	An answer that combines the following points of understanding to provide a logical description: the situation which caused the charge separation (1) where the spark travelled {from/to} (1)	examples when refuelling, spark between end of {fuel/pipe} and vehicle =2 spark {between/from /to} person comb/clothes/metal handle and, when combing hair/removing clothing/opening door = 2 lightning flash, between cloud and cloud/plane/ground, =2 ignore between plug and socket/jump leads	(2)

Question number	Answer	Additional guidance	Mark
(ii)	unit conversion (1) $0.22\ \mu C = 0.22 \times 10^{-6}$ C and $2\ ms = 2 \times 10^{-3}$ s substitution (1) 0.22×10^{-6} = current x 2×10^{-3} s rearrangement (1) current = $0.22 \times 10^{-6} / 2 \times 10^{-3}$ evaluation (1) 1.1×10^{-4} (A)	Substitution and re-arrangement in either order both needed ecf award full marks for correct answer without working power of ten error only loses one mark, if the rest is correct	(4)

Q2.

Question Number	Answer	Acceptable answers	Mark
(a)	repel (1) charge (1) positive (1) electrons (1)		**(4)**

Question Number	Answer	Acceptable answers	Mark
(b)(i)	An explanation linking any **three** from the following: • Droplets have same charge (1) • (droplets) repel (one another) (1) • (This produces) a fine spray/mist (1) • attraction between droplets and plant (1) • This improves coverage OR Spray covers whole [leaf /plant] top and underside of leaf/ gives a fine coating/ even coat (1) • Less spray used/wasted/ falls onto soil (so saves money) (1)	Ignore references to attracting or repelling insects. ignore droplets are positive /negative droplets spread out (produce an) even spray droplets attracted to negative/opposite charge (on plant) or spray will stick to leaves/plant better/more chance of spray landing on/hitting plant or spray (lands) evenly on plant none is wasted/Less will run off the leaves/Same amount of spray will cover a larger area(so saves money)	**(3)**

Question Number	Answer	Acceptable answers	Mark
(b)(ii)	10 minutes = 600 seconds (1) substitution 0.008 x 600 (1) evaluation 4.8 (C) (1) Ignore any unit given by the candidate	ECF from their time eg 2 marks for 0.08 if their time is 10 0.8/8/8.0/80 gains 1 mark (bod POT error) Power of ten error max of 2 marks eg 480 gains 2 marks Award 3 marks for correct answer, no working No power of ten error mark if answer less than 0.008 as probably dividing Award 2 marks for 0.08, no working	**(3)**

(Total for Question =10 marks)

Q3.

Question number	Answer	Additional guidance	Mark
(i)	0.9 (v)	0.90 ignore units ignore calculations	**(1)**

Question number	Answer	Additional guidance	Mark
(ii)	substitution (1) $R = \frac{2.1}{0.041}$ evaluation (1) R = 51(.2) (Ω) (which is approx. 50 (Ω))	allow (V) = 0.041 x 50 V = 2.05 (v) (which is approx. 2.1) allow R = 51(.2) (Ω) with no working for 2 marks	**(2)**

Question number	Answer	Additional guidance	Mark
(iii)	recall and substitution (1) (P) = 2.1 x 0.041 evaluation (1) (P =) 0.086 (W)	 allow any value that rounds to 0.086; e.g. 0.0861 (W) 0.09 (W) award full marks for the correct answer without working allow POT error for 1 mark	**(2)**

Question number	Answer	Additional guidance	Mark
(iv)	recall that effective resistance = sum of individual resistances (1) (resistance =) 50 + 22 evaluation (1) 72 (Ω)	 51 + 22 73 (Ω) award full marks for the correct answer without working	**(2)**

Question number	Answer	Additional guidance	Mark
(v)	substitution (1) (E =) 3.0 x 0.041 x 2 (x60) evaluation (1) 15 (J)	 accept values that round to 15; e.g. 14.76 award full marks for the correct answer without working award 1 mark for answer of 0.246 (J) or 0.25 (J) without working	**(2)**

Q4.

Question Number	Answer	Additional guidance	Mark
	50(Hz) (1)		**(1)** **AO1.1**

Q5.

Question number	Answer	Mark
(i)	either power = (current)^2 × resistance or $P = I^2 \times R$	**(1)**

Question number	Answer	Additional guidance	Mark
(ii)	substitution into $P = I^2 \times R$ (1) $55 = 4.4^2 \times R$ rearrangement (1) $R = P \div I^2$ evaluation (1) 2.8 (Ω)	Substitution and re-arrangement in either order $R = 55 \div 4.4^2$ for 2 marks allow answers that round to 2.8 award full marks for correct answer without working allow alternative route $V = P \div I = 55 \div 4.4$ then $R = V \div I = 12.5 \div 4.4$	(3)

Q6.

Question number	Answer	Additional guidance	Mark
	an explanation linking any **three** from: lamp in second circuit is dimmer (than lamp in first circuit) (1) current in second circuit is less (than in first circuit) (1) potential difference / voltage across each lamp (in second circuit is) less / shared (1) idea that power of each lamp (in second circuit) is less / shared (1) the (total) resistance of the second circuit is more (than in first circuit) (1)	accept reverse arguments throughout	**(3)** **A01**