Questions

Q1.

Answer the question with a cross in the box you think is correct (☒). If you change your mind about an answer, put a line through the box (☒) and then mark your new answer with a cross (☒).

Figure 14 is a graph of atmospheric pressure against height above the surface of the Earth.

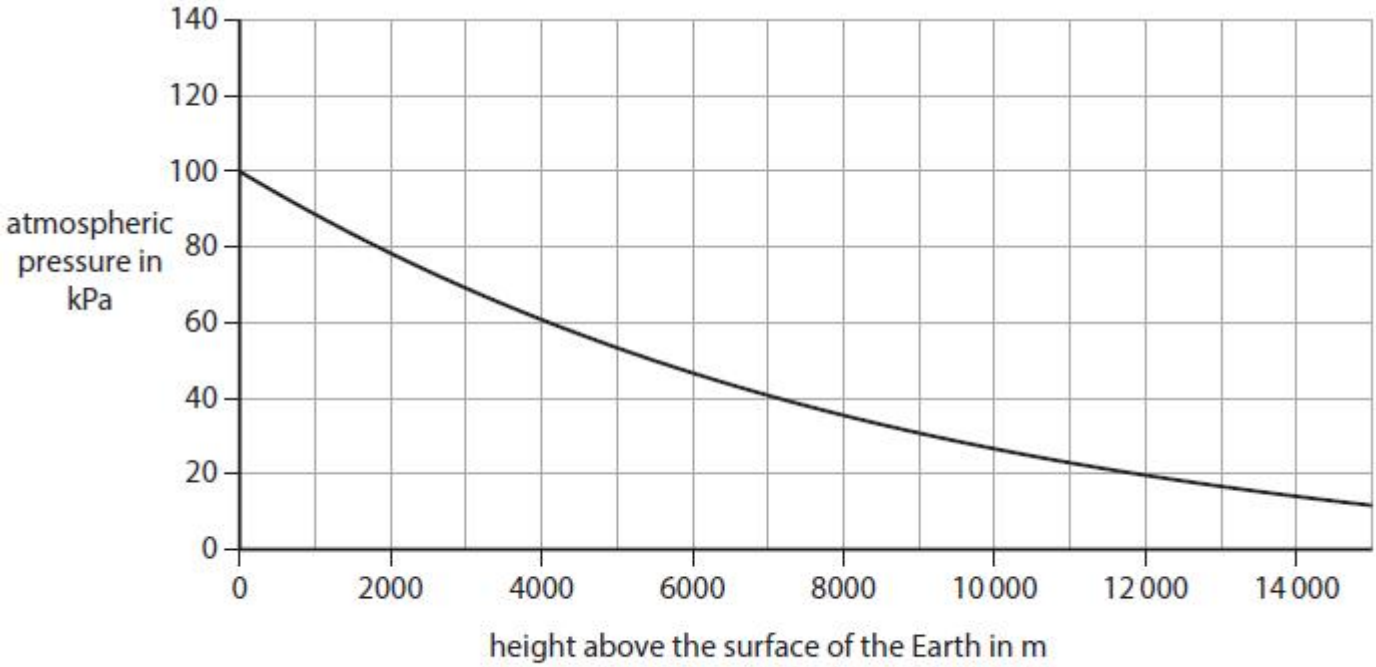

Figure 14

(i) The atmospheric pressure at 3000 m above the surface of the Earth, as shown in Figure 14, is

(1)

☐ **A** 80 kPa
☐ **B** 70 kPa
☐ **C** 60 kPa
☐ **D** 50 kPa

(ii) Use Figure 14 to describe how the atmospheric pressure depends on the height above the surface of the earth.

(2)

.....

.....

.....

.....

(Total for question = 3 marks)

Q2.

Figure 24 shows the atmospheric pressure at different heights above the Earth's surface.

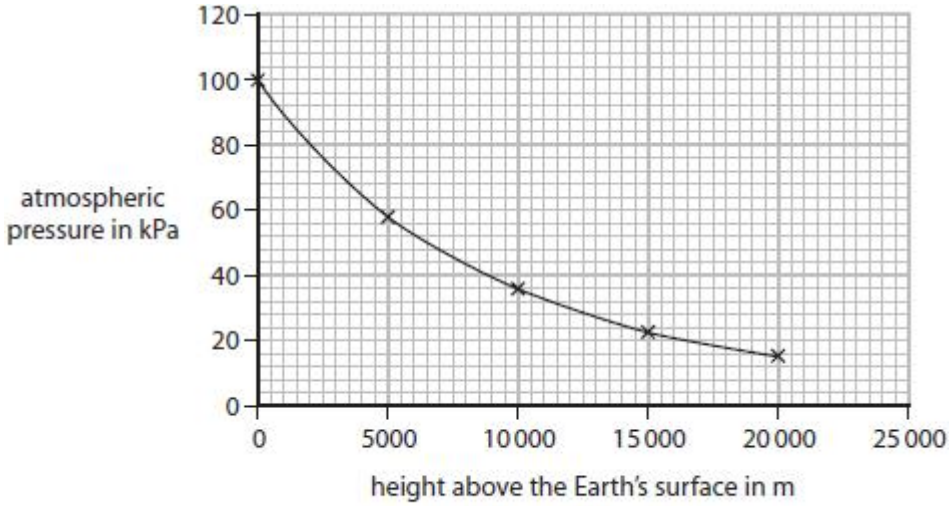

Figure 24

(i) Describe how the atmospheric pressure changes with height above the Earth's surface.
Use data from Figure 24 to support your answer.

(3)

.....

.....

.....

.....

.....

.....

(ii) Suggest **one** reason why the atmospheric pressure changes with height above the Earth's surface.

(1)

.....

.....

(Total for question = 4 marks)

Q3.

Figure 27 shows how atmospheric pressure changes with height above sea level.

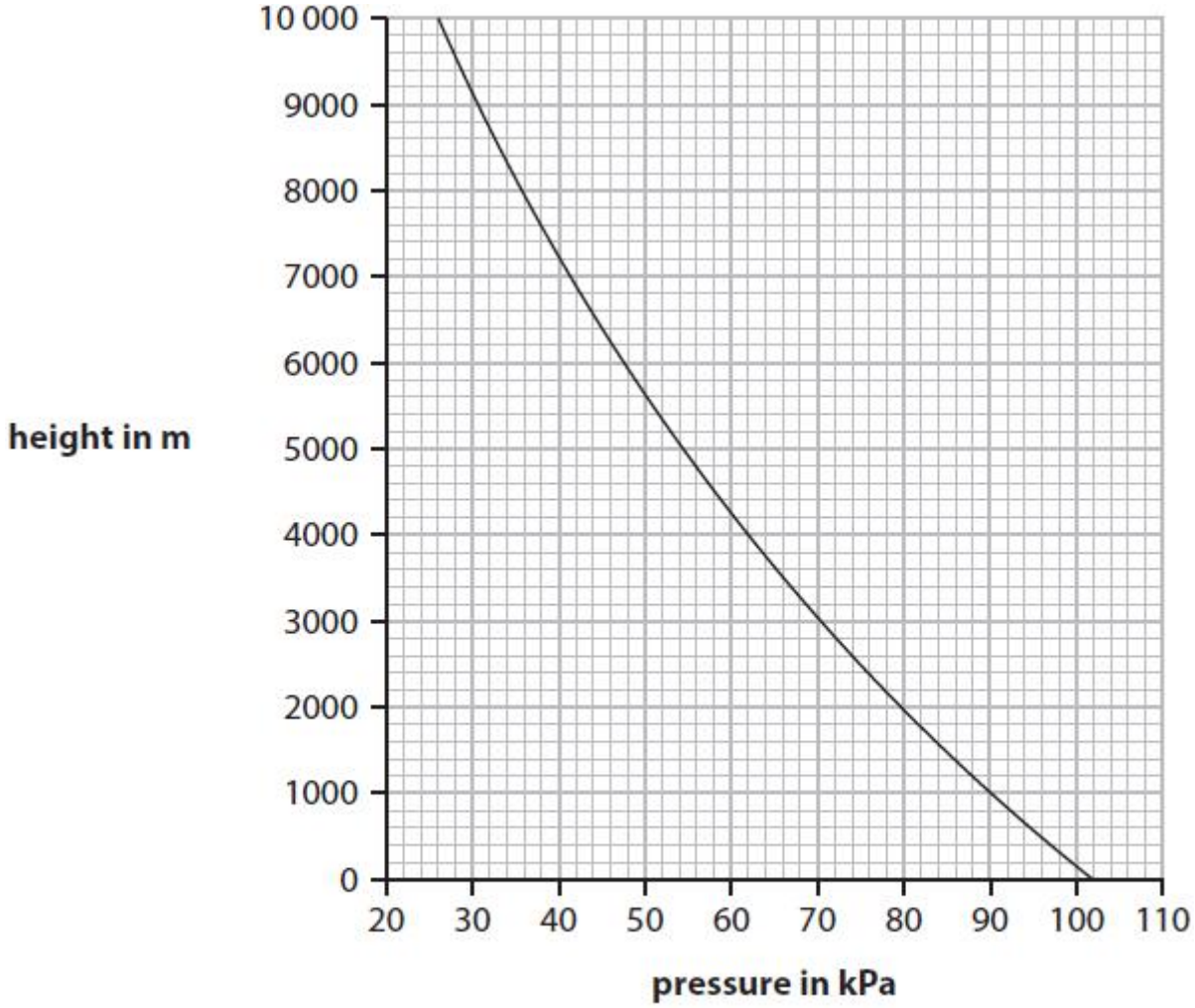

Figure 27

(i) Using the graph, describe how atmospheric pressure changes with height above sea level.

(2)

.....

.....

.....

.....

(ii) The top of Mount Everest is 8850 m above sea level.

Using the graph, estimate the atmospheric pressure at the top of Mount Everest.

(1)

pressure = ... kPa

(iii) On a different day, the pressure at sea level is 104 kPa and the pressure at a height of 2500 m is 74 kPa.

Calculate the percentage change in pressure from sea level to the height of 2500 m.

(2)

percentage change = ... %

(Total for question = 5 marks)

Q4.

Figure 9 shows a 10 N weight hanging from a spring.

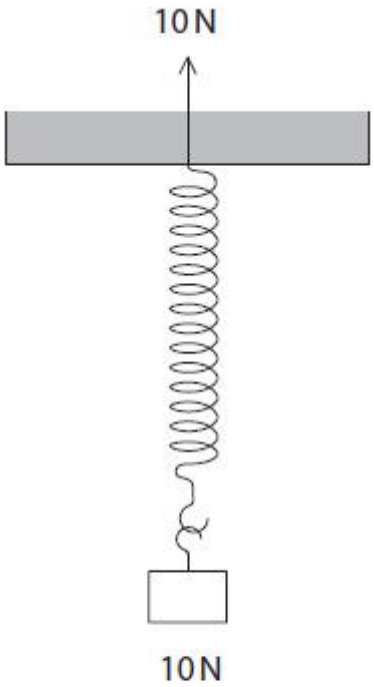

Figure 9

One of the forces acting to stretch the spring is shown in Figure 9.

Complete Figure 9 by adding an arrow to show the other force acting to stretch the spring.

(2)

(Total for question = 2 marks)

Q5.

A student carries out an investigation to show how pressure varies with depth in water.

A pressure sensor is attached to a rule.

The rule and pressure sensor are lowered into the water in a tank, as shown in Figure 25.

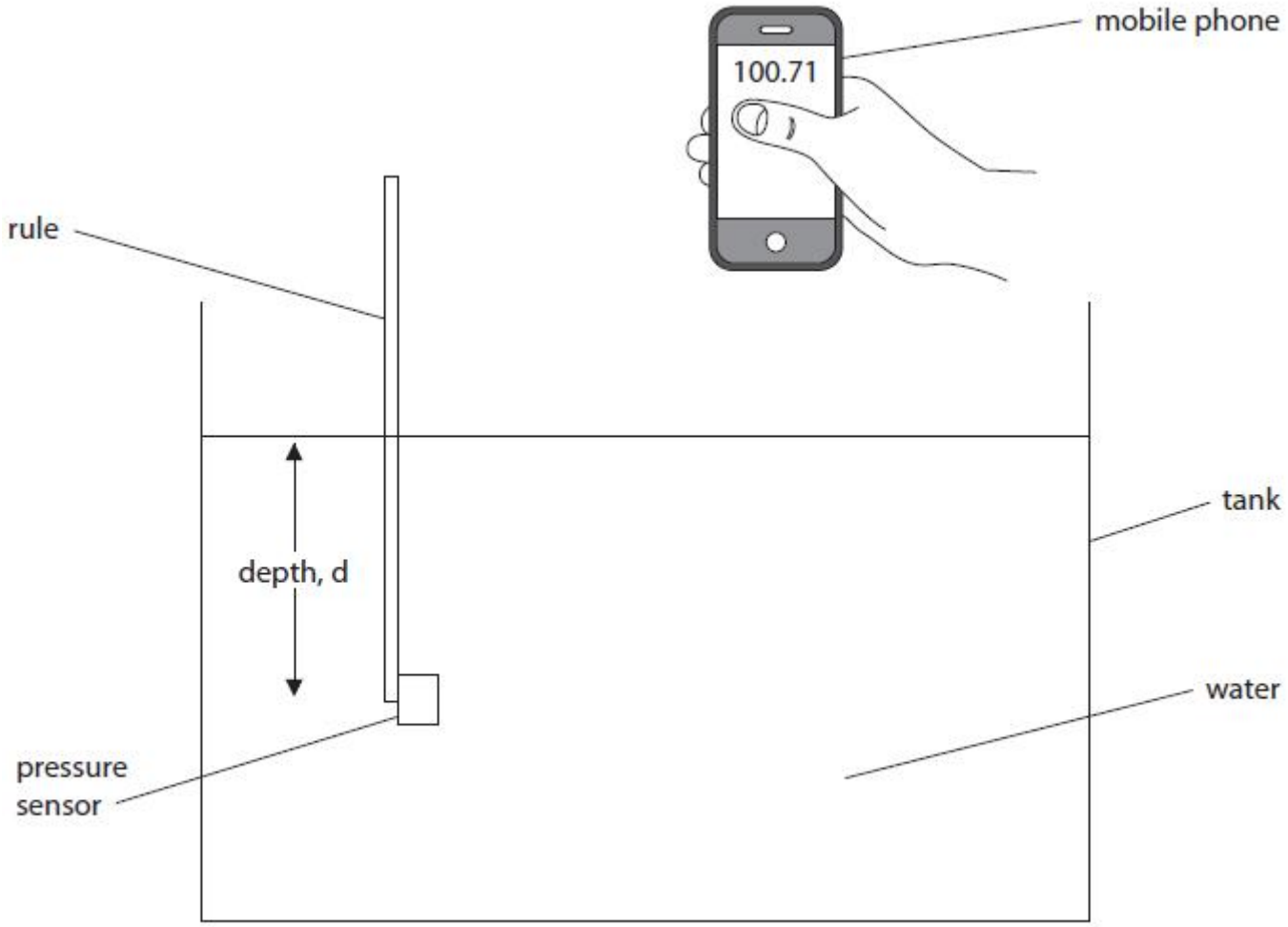

Figure 25

The depth of the pressure sensor below the surface of the water is read from the scale on the rule.

The pressure is displayed on the student's mobile phone which receives a signal from the pressure sensor.

Figure 26 gives some of the readings.

depth in m	pressure in kPa
0.050	99.15
0.100	99.70
0.150	100.15
0.200	100.70
0.250	101.15
0.300	101.70

Figure 26

Figure 27 shows a graph with some of the results plotted, but two of the points are missing.

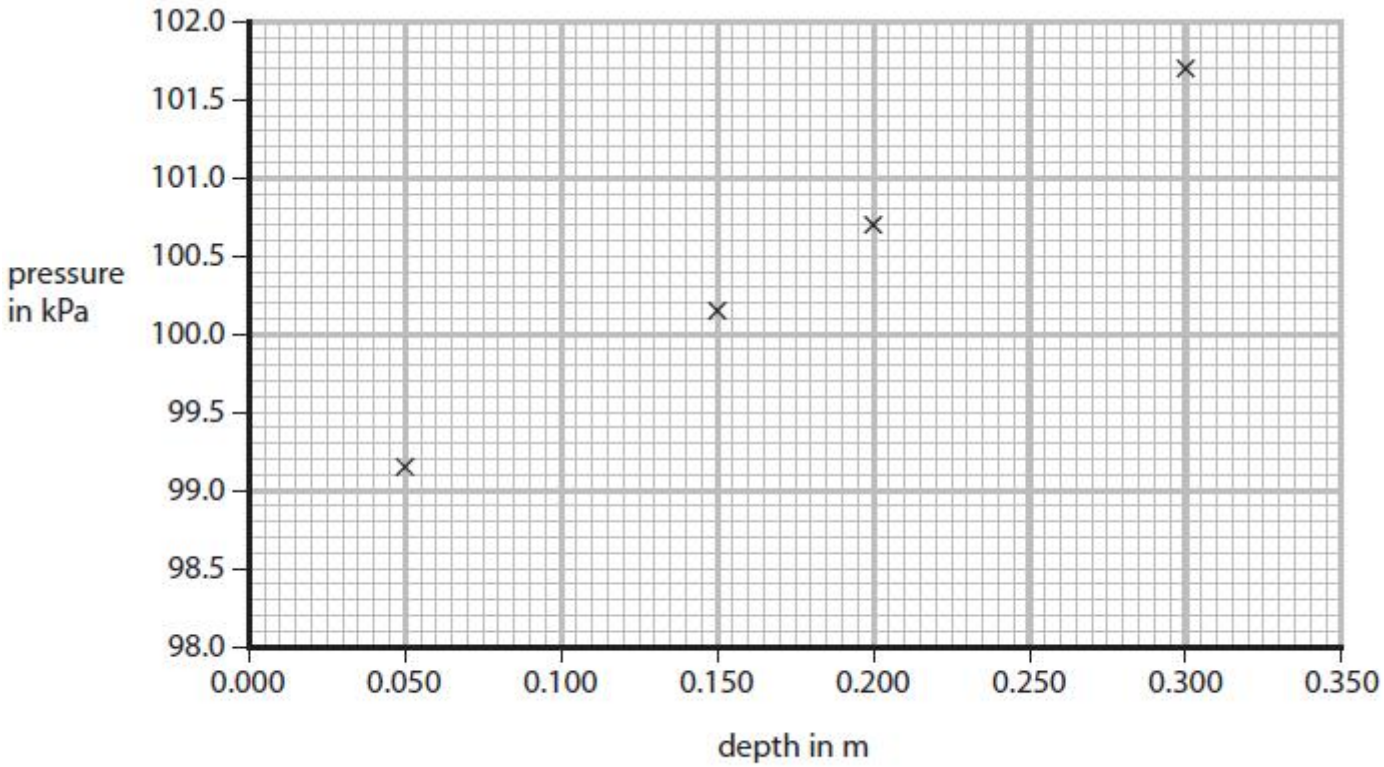

Figure 27

The student repeats the investigation using seawater and draws a graph of the results.

The seawater is more dense than the water used previously.

Compare the graph for seawater with the graph in Figure 27.

(2)

.....

.....

.....

.....

(Total for question = 2 marks)

Q6.

Figure 13 shows a tank for holding water.

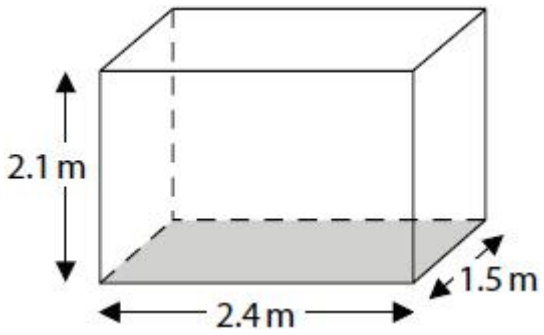

Figure 13

The tank has sides of 2.4 m, 2.1 m and 1.5 m.

The pressure at the bottom of the tank is 12 kPa.

(i) State the equation relating pressure, force and area.

(1)

(ii) Calculate the weight of water in the tank.

(4)

weight = ... N

(iii) Which diagram shows the direction of the forces from the water on the inside of the tank?

(1)

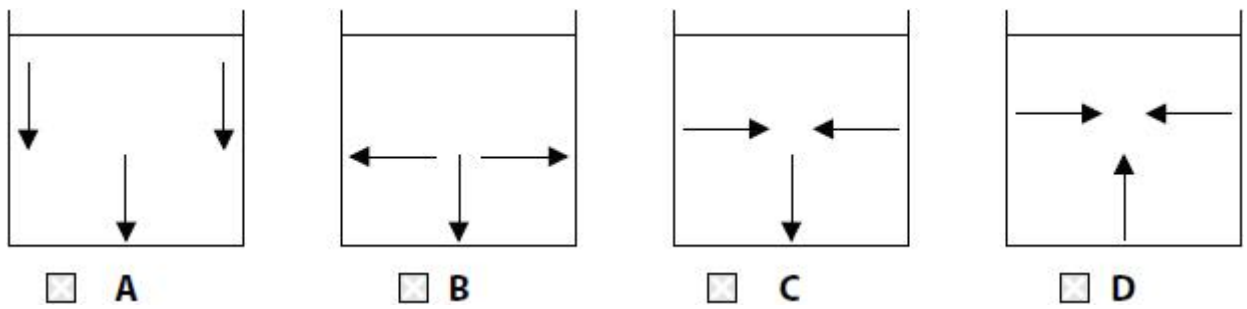

(Total for question = 6 marks)

Q7.

Figure 10 shows a toy used to launch a ball.

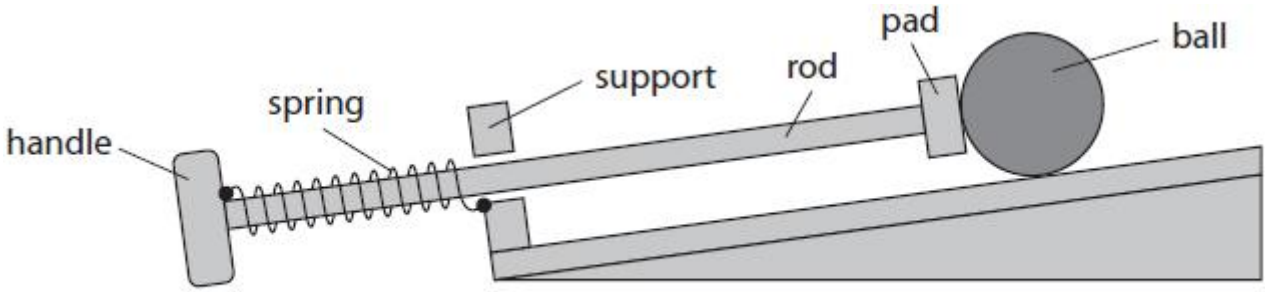

Figure 10

One end of the spring is fixed to the handle.

The other end of the spring is fixed to the support.

The child pulls the handle until the pad is against the support as shown in Figure 12.

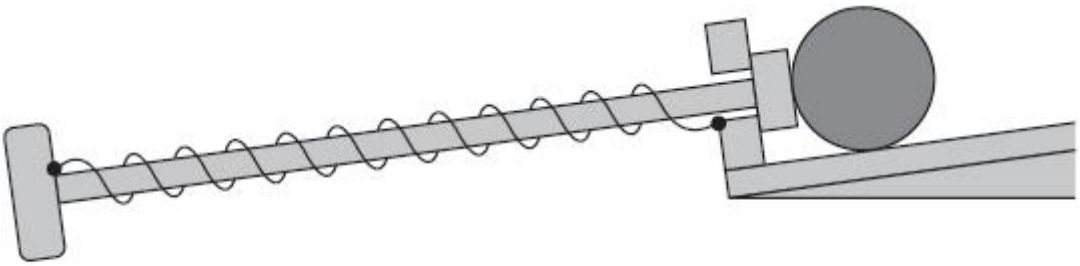

Figure 12

(i) The extension of the spring is 0.09 m.

The spring constant (k) is 20 N/m.
Calculate the work done in extending the spring by 0.09 m.
Use the equation

$$\text{work done} = \tfrac{1}{2} \times k \times (\text{extension})^2$$

(2)

work done = ... J

(ii) The child lets go of the handle.

The ball starts to move.
The spring returns to its original length.
Describe the energy transfer that takes place when the ball starts to move.

(2)

.....

.....

.....

.....

(iii) The child can only stretch the spring until the pad is pressing against the support.
Explain how the design of the toy prevents the spring from becoming damaged.

(2)

.....

.....

.....

(Total for question = 6 marks)

Q8.

Another spring has a spring constant of 250 N/m.

Calculate the work done in stretching the spring by 0.30 m.

State the unit.

Use the equation

$$E = \frac{1}{2} \times k \times x^2$$

(3)

work done in stretching the spring = ... unit .....

(Total for question = 3 marks)

Q9.

(i) Figure 13 shows a spring stretched by some weights.

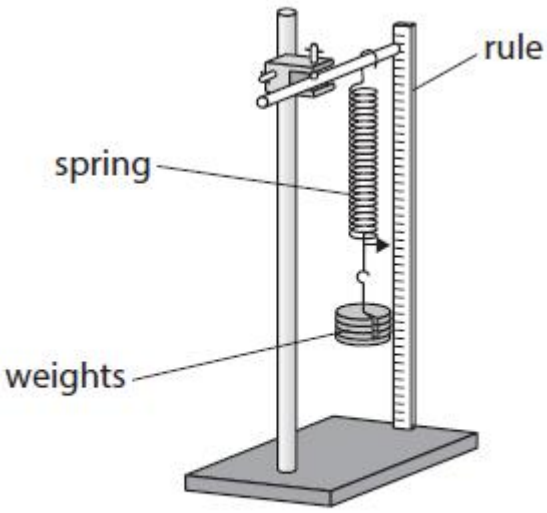

Figure 13

The extension of the spring is 6.2 cm when a weight of 2 N is added.

Calculate the spring constant, *k*, of the spring.

Use the equation

$$k = \frac{F}{x}$$

(2)

spring constant, *k* = ... N/m

(ii) Work is done when a spring is stretched.

A different spring has a spring constant of 25 N/m.

The spring is stretched by 0.06 m.

Calculate the energy transferred by stretching the spring.

Use the equation

$$E = \frac{1}{2} \times k \times x^2$$

(2)

energy transferred = ... J

(Total for question = 4 marks)

Q10.

A weight of 4.0 N is used to extend a spring.
The extension of the spring is 0.06 m.

(i) Calculate the spring constant, *k*, of the spring.

Use the equation

$$F = k \times x$$

(3)

spring constant = ... N/m

(ii) State what measurements should be made to determine the extension of the spring produced by the 4.0 N weight.

(2)

.....

.....

.....

.....

(Total for question = 5 marks)

Q11.

A student wants to find the pressure they exert on the floor.

The student starts by standing on a piece of squared paper and drawing around the base of their shoe, as shown in Figure 6.

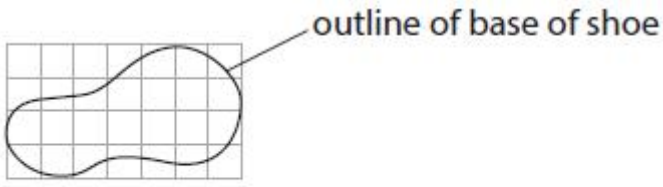

Figure 6

The area of each square is 25 cm^2.

The student estimates that the base of the shoe covers about 12 squares.

(i) Use this estimate to calculate the area of the base of the shoe.

(2)

area of base of shoe = ... cm^2

(ii) Suggest **one** change that could be made to the squared paper so that the student can give a better estimate of the area of the base of the shoe.

(1)

.....

.....

(iii) The total area of the base of a student's shoes is 0.031 m^2.

The weight of the student is 680 N.

Calculate the pressure that the student exerts on the ground.

State the unit.

Use the equation

$$P = \frac{F}{A}$$

(3)

pressure = ... unit .....

(Total for question = 6 marks)

Mark Scheme

Q1.

Question Number	Answer	Additional guidance	Mark
(i)	**B** 70 kPa **A** is incorrect because it is the atmospheric pressure at a height of about 2000m above the Earth **C** is incorrect because it is the atmospheric pressure at a height of 4000m above the Earth's surface **D** is incorrect because it is the atmospheric pressure at a height of about 5500m above the surface of the Earth		**(1)** **AO3.2b**

Question Number		Additional guidance	Mark
(ii)	a description including: the atmospheric pressure deceases as the height above the surface of the Earth increases (1) idea of non-linear (relationship) (1)	 accept reverse argument Ignore negative correlation accept exponential accept inversely proportional ignore indirectly proportional ignore curved	**(2)** **AO2.2**

Q2.

Question number	Answer	Additional guidance	Mark
(i)	increase in height results in decrease in pressure (1)	pressure decreases with height accept inversely proportional in this context accept negative correlation	**(3)** **AO3**
	non-linear relationship (1)	double the height does not result in half the pressure pressure not does change evenly description of graph e.g. curved / not straight	
	use of numerical data (1) at least two different pressure and height values from the graph	calculation of change in pressure e.g. 5000m to 10000 m pressure went down by 22	

Question number	Answer	Additional guidance	Mark
(ii)	any **one** from	accept oxygen / atmosphere for air	**(1)** **AO1**
	air becomes less dense (1)	air gets thinner / (air) particles further apart / fewer particles / less particles	
	smaller weight (of air) above (1)	less air above / smaller height of air above	
	lower temperature (1)	ignore change in value of g with height	

Q3.

Question	Answer	Additional guidance	Mark
(i)	a description including: pressure increases as height decreases (1) OR as height increases pressure decreases (1) non-linear (1)	negative correlation implication of non-linear e.g. curved OR not proportional OR gradient increases as height increases OR gradient decreases as pressure increases	(2) AO3.2

Question	Answer	Additional guidance	Mark
(ii)	accept any answer from 30 to 34 (kPa) (1)		(1) A03.2

Question	Answer	Additional guidance	Mark
(iii)	substitute into % calculation (1) $\frac{74 - 104}{104}$ (x 100) evaluation (1) (-) 29 (%)	$\frac{104 - 74}{104}$ (x 100) any number rounding to (-)29(%) e.g. (-)28.8(%) award full marks for the correct answer without working award 1 mark for (-)0.29 OR (-)0.288	**(2)** **AO2.1**
		award 1 mark for (-)40(.54) (%) or (-)41 (%) award 1 mark for 71 (%)	

Q4.

Question Number	Answer	Additional guidance	Mark
	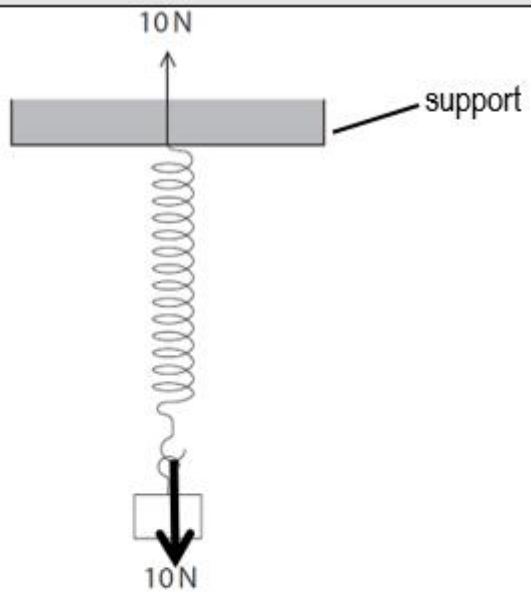		(2)
	downwards arrow (1)	Anywhere below the support	
	Plus any one from:		
	the same length as top arrow (1)	Judge by eye	
	from the bottom of the spring or from the weight (1)	Judge by eye	

Q5.

Question number	Answer	Additional guidance	Mark
	any two from pressure(s) would be greater (values) (1) steeper gradient of graph (1) both straight lines (1) intercept (on pressure axis) the same (1)	**credit mark points seen on graph** bigger gradient / steeper line (of best fit) both linear pressure at surface is the same	**(2)** **AO3**

Q6.

Question number	Answer	Mark
(i)	pressure = force ÷ area	**(1)**

Question number	Answer	Additional guidance	Mark
(ii)	rearrangement (1) $(F =)\ P \times A$ calculation of area (1) $2.4 \times 1.5 = 3.6$ substitution (1) $(F =)12\,000 \times 3.6$ answer (1) 43 200 (N)	award full marks for correct numerical answer without working maximum 3 marks if kPa not converted to Pa	**(4)**

Question number	Answer	Mark
(iii)	B	**(1)**

Q7.

Question number	Answer	Additional guidance	Mark
i	substitution (1) (E =) ½ X 20 x 0.09(2) evaluation (1) 0.08(1) (J)	 allow 1 mark for ½ x 20 x 9^2 or answer of 810 (J) or answer of 90 (J) award full marks for the correct answer without working	**(2)**

Question number	Answer	Additional guidance	Mark
ii	a description including mention of one relevant energy store (1) correct transfer in context (1)	 potential/ PE/ kinetic/ KE/ thermal/ heat/ elastic potential energy stored in the spring transferred to kinetic energy of the ball/rod scores 2 marks kinetic energy of rod is transferred to kinetic energy of ball scores 2 marks idea of energy transferred to the surroundings/ thermal scores 2 marks	**(2)**

Question number	Answer	Additional guidance	Mark
iii	an explanation linking two from (controls the maximum) extension (1) idea of keeping below the elastic limit (1) (which would result in) spring being permanently stretched (1)	ignore damaging the spring (given in stem) stretch prevents spring being over-stretched / extended too far scores 2 marks allow distorted/ break	(2)

Q8.

Question Number	Answer	Additional guidance	Mark
	substitution (1) (E=) ½ x 250 x 0.30(^{2}) evaluation 11 (1) unit (1) joule(s)/J	 accept 37.5, 37, 38 only accept 11.25, 11.2, 11.3 award full marks for the correct answer without working no POT error in evaluation independent mark j , Nm	(3)

Q9.

Question Number	Answer	Additional guidance	Mark
(i)	substitution (1) (k =) $\frac{2}{6.2 (\times 10^{-2})}$ evaluation (1) 32 (N/m)	accept answers which round to 32 32 to any other power of ten scores 1 mark award full marks for the correct answer without working ignore 3.1 (from 6.2/2)	**(2)** **AO2.2**

Question Number	Answer	Additional guidance	Mark
(ii)	substitution (1) (E =) $0.5 \times 25 \times 0.06^2$ evaluation (1) 0.045 (J)	accept 0.05 (J) 0.045 to any other power of ten scores 1 mark award full marks for the correct answer without working	**(2)** **AO 2.1**

Q10.

Question Number	Answer	Additional guidance	Mark
(i)	substitution (1) 4.0=k x 0.06 rearrangement (1) $\frac{4.0}{0.06}$ (=k) evaluation (1) 67 (N/m)	allow substitution and rearrangement in either order (k=) $\frac{F}{x}$ allow values that round to 67 (N/m) award full marks for the correct answer without working POT error 2 marks maximum	(3)

Question Number	Answer	Additional guidance	Mark
(ii)	(measurement of) original length (1) (measurement of) final length (1)	Accept measure length of spring for 1 mark	(2)

Q11.

Question Number	Answer	Additional guidance	Mark
(i)	use (1) 12 x 25 evaluate (1) 300 (cm^2)	300 to any other power of ten scores 1 mark award full marks for the correct answer without working	(2) AO2.1

Question Number	Answer	Additional guidance	Mark
(ii)	(use paper with) smaller divisions/squares (1)	accept suggested square area less than $25cm^2$ accept use larger paper (so the shoe fits easier) ignore repeating	**(1)** **AO3b**

Question Number	Answer	Additional guidance	Mark
(iii)	substitution (1) (P =) $\frac{680}{0.031}$ evaluation (1) 22 000 (Pa)	 accept any answer that rounds to 22 000 or 2.2×10^4 power of ten error scores 1 mark	**(3)** **AO2.1** **AO1.1**
	OR substitution (1) (P =) $\frac{680}{0.062}$ evaluation (1) 11 000 (Pa)	 accept any answer that rounds to 11 000 or 1.1×10^4 power of ten error scores 1 mark award first 2 marks for the correct answer without working	

	unit (1) Pa **OR** N/m^2 **OR** Pascal	independent mark do not accept Nm^2 do not accept n for N accept for 3 marks: 22 kPa **OR** 11 kPa **OR** 2.2 N/cm^2 **OR** 1.1 N/cm^2	