Questions

Q1.

(i) Figure 8 shows a force of 70 N turning a lever about point P.

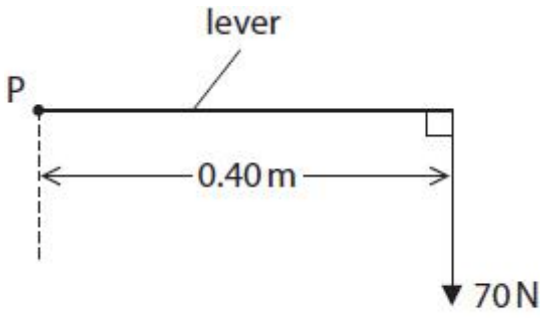

Figure 8

Calculate the moment of the 70 N force about point P.
State the unit.
Use the equation

moment = force × distance normal to the direction of the force

(3)

moment = ...unit .....

(ii) Figure 9 shows a worker using a wheelbarrow to move some sand.

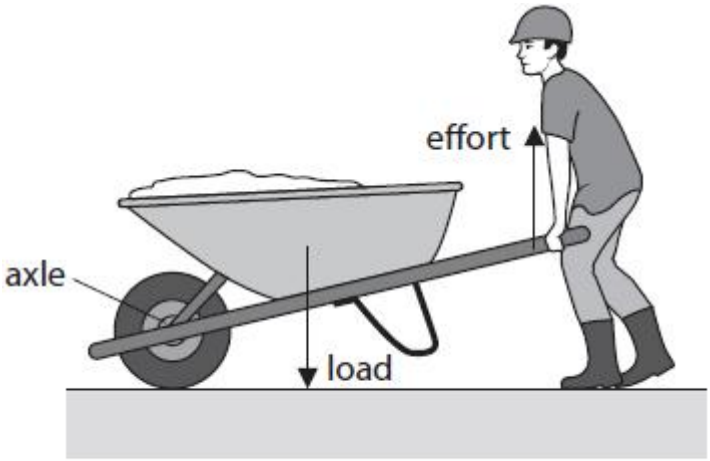

Figure 9

The load is equal to the total weight of the sand and the wheelbarrow.
The effort is the force that the worker applies to the wheelbarrow handles.
The worker applies just enough effort to lift the load.
Explain why the effort is smaller than the load.

(2)

.....

.....

.....

.....

(iii) Some sand falls down and sticks between the wheel and the axle.

State why it might be harder to push the wheelbarrow along when there is some sand between the wheel and
the axle.

.....

.....

(Total for question = 5 marks)

Q2.

Answer the question with a cross in the box you think is correct ☒. If you change your mind about an answer, put a line through the box ☒ and then mark your new answer with a cross ☒.

(i) Figure 6 shows two gears.

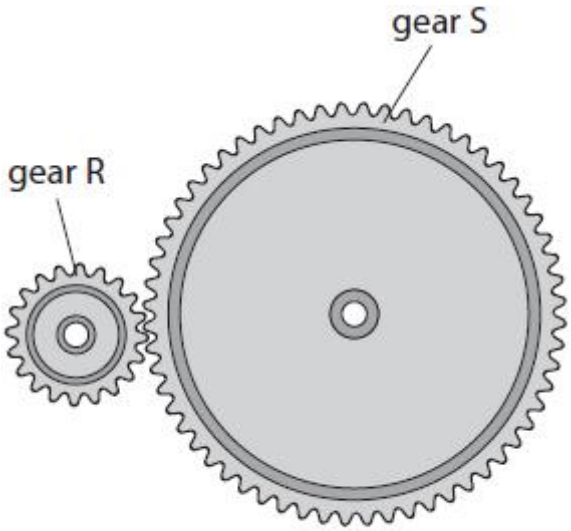

Figure 6

Gear R and gear S can rotate.
Gear R has 20 teeth.
Gear S has 60 teeth.
Gear S rotates through 2 complete revolutions.
Calculate how many complete revolutions gear R rotates by.

(2)

gear R has rotated through ..... revolutions

(ii) Figure 7 shows two gears, S and T.

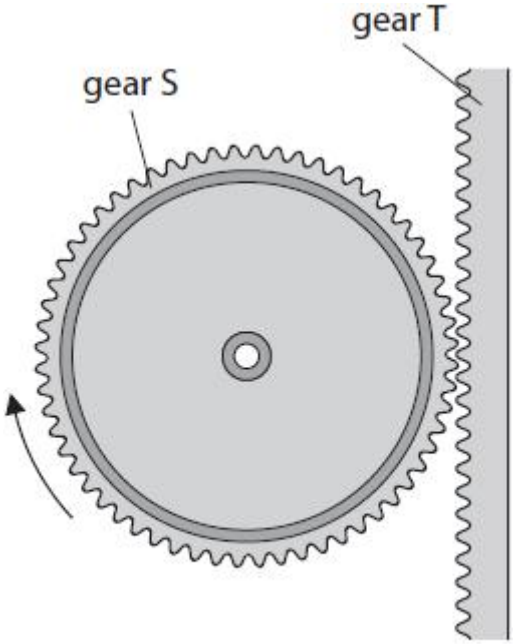

Figure 7

Gear S can rotate on a fixed axle.
Gear T can move up and down.
Gear S has 60 teeth.
The distance between each of the teeth on gear S and on gear T is 2 mm.
Gear S moves through one complete revolution in the direction shown.
Which of these describes the motion of gear T?

(1)

- ☐ **A** 60 mm up
- ☐ **B** 60 mm down
- ☐ **C** 120 mm up
- ☐ **D** 120 mm down

(Total for question = 3 marks)

Q3.

Figure 7 shows two boxes on a plank.

The plank is balanced on a pivot.

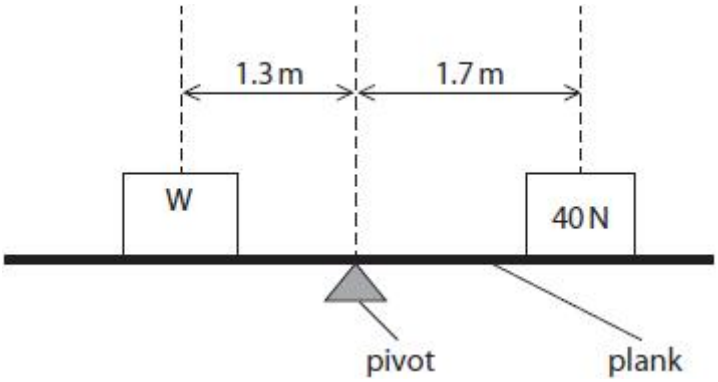

One box has a weight of 40 N.

(i) Calculate the moment of the 40 N weight about the pivot.

State the unit.
Use the equation
moment = force × perpendicular distance

(3)

moment = ...

unit .....

(ii) Calculate the weight, W, needed to balance the plank in Figure 7.

(3)

W = ... N

(Total for question = 6 marks)

Q4.

Figure 17 shows a balanced seesaw with two children on it.

The pivot is at the centre of the seesaw.

The seesaw is balanced with no children sitting on it.

Child P has a weight of 150 N.

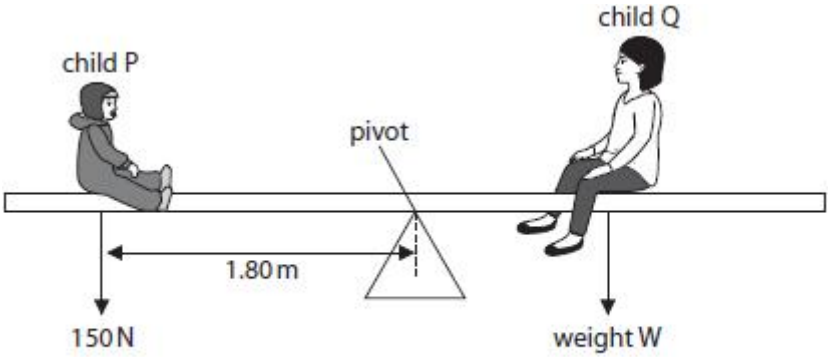

Figure 17

(i) Calculate the moment of the weight of child P about the pivot in N m.

Use the equation

moment of a force = force × distance to pivot

(2)

moment = ... N m

(ii) Figure 18 shows the same balanced seesaw, with the distance of child Q to the pivot labelled as well.

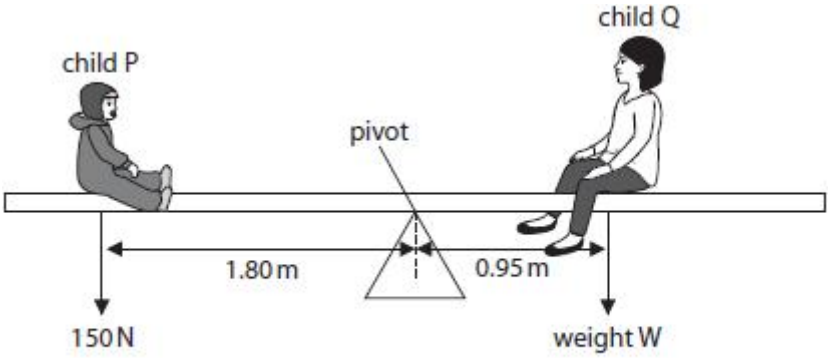

Figure 18

Calculate the value of W, the weight of child Q.

Use the idea of moments and the equation

the moment of W = the moment of the weight of child P

Give your answer to 2 significant figures.

(3)

W = ... N

(Total for question = 5 marks)

Q5.

(i) Figure 3 shows a rock and a long lever.

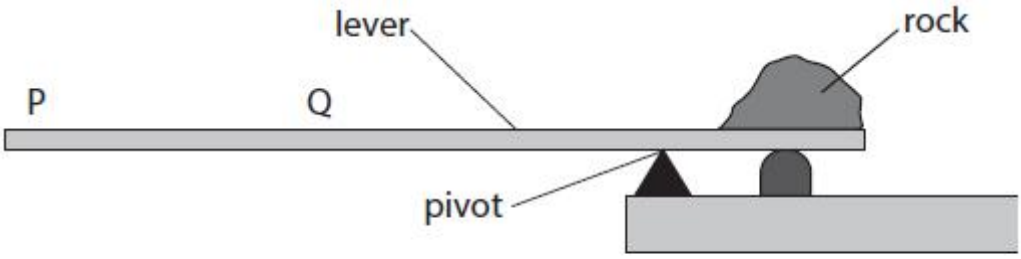

Figure 3

The lever is used to try to move the rock.

The lever is pushed downwards at Q with a force of 375 N.
Q is 1.4 m from the pivot.

Calculate the moment of the force at Q about the pivot.

Use the equation

moment of a force = force × distance from pivot

(2)

moment of force = ... Nm

(ii) When the force of 375 N is pushed down at Q, the rock does not move.

Explain why pushing down at P with a force of 375 N may be more successful in moving the rock.

(2)

.....

.....

.....

.....

(Total for question = 4 marks)

Q6.

Figure 3 shows a force of 200 N acting at the end of a plank of wood.

The force acts at right angles to the plank and at 3.0 m away from a pivot.

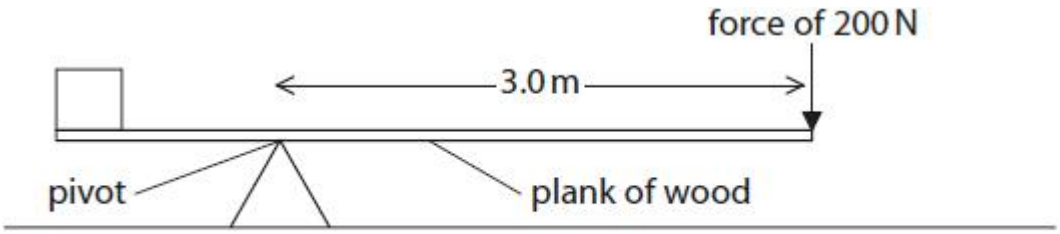

Figure 3

Calculate the moment of the 200 N force about the pivot.

State the unit of the moment of the force.

Use the equation

moment of a force = force × distance at right angles to the direction of the force

(3)

moment of the force about the pivot = ... unit
.....

(Total for question = 3 marks)

Q7.

Figure 3 shows a force, F, acting on a ruler.

The ruler has a pivot at one end.

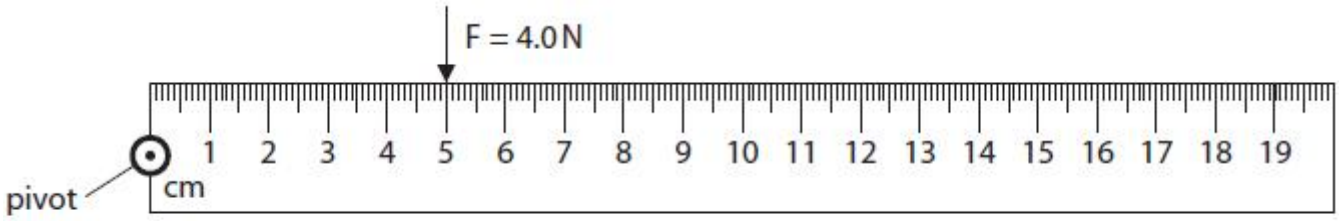

Figure 3

Calculate the moment of the force, F, around the pivot.

Give your answer in units of Nm.

Use the equation

moment of a force = force x distance from pivot

(2)

moment = ... Nm

(Total for question = 2 marks)

Q8.

A scuba diver goes for a diver. When underwater, the diver tries to move a large stone block.

The diver uses a long iron bar and a pivot, as shown in Figure 26.

When pushing down with a force of 120 N, the block is balanced.

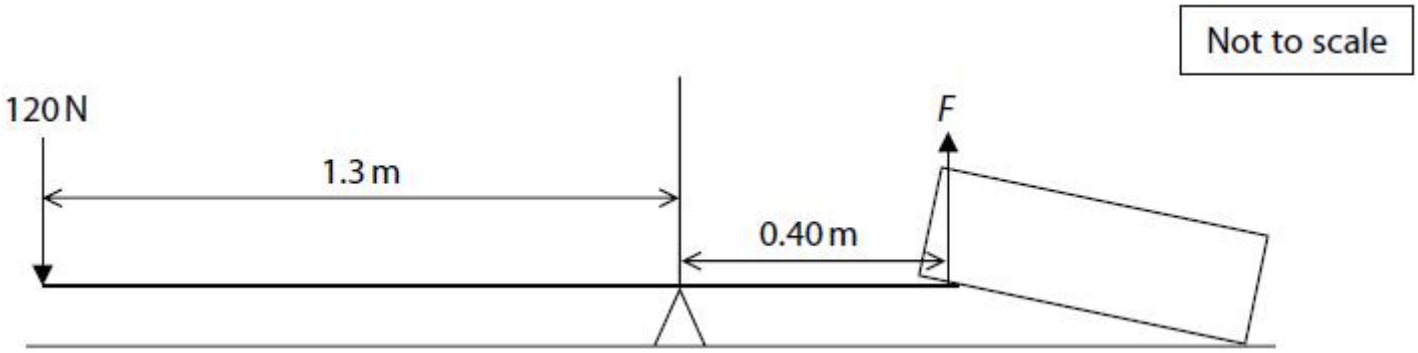

Figure 26

Calculate the size of the force, *F*, of the bar on the block.

(3)

force = ... N

(Total for question = 3 marks)

Q9.

Figure 21 shows a bicycle.

Figure 21

(i) The rider uses the pedals to make the large gear wheel turn.

The large gear wheel moves the chain.
The chain turns the small gear wheel.
The large gear wheel has 48 teeth.
The small gear wheel has 12 teeth.
The large gear wheel turns 2 times each second.
Calculate the number of times that the small gear wheel turns each second.

(2)

..... turns each second

(ii) Oil is applied to the wheel of a bicycle at the point shown in Figure 22.

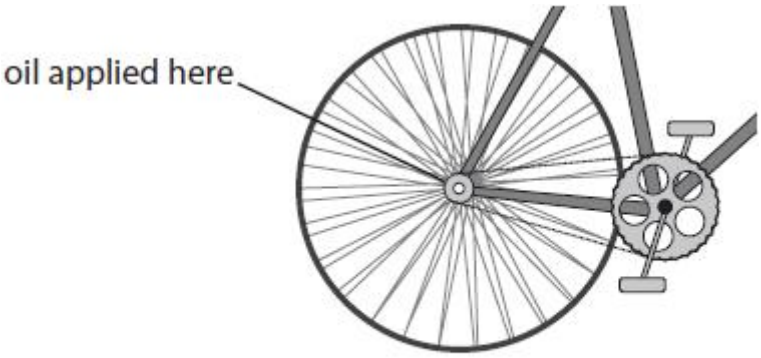

Figure 22

Explain how the oil improves the efficiency of the bicycle.

(3)

.....

.....

.....

.....

.....

.....

(Total for question = 5 marks)

Q10.

Figure 4 shows a uniform ruler that can rotate about a pivot.
The ruler is balanced by adding weights to each side.

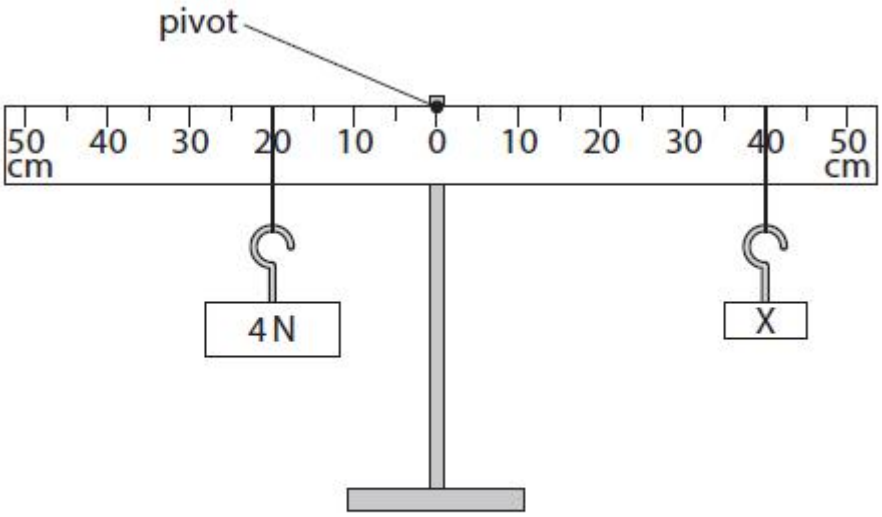

Figure 4

Calculate the value of X, the unknown weight, that keeps the ruler balanced.

(2)

X = ... N

(Total for question = 2 marks)

Mark Scheme

Q1.

Question number	Answer	Additional guidance	Mark
i	substitution (1) (moment=) 0.40 × 70 evaluation (1) 28 Nm (1)	 independent mark award full marks for the correct answer without working	(3)

Question number	Answer	Additional guidance	Mark
ii	an explanation linking the effort is at a bigger distance (1) from fulcrum (than the load) (1)	allow reverse argument for load (magnitudes of) moments are the same allow wheel/axle/pivot for fulcrum	(2)

Question number	Answer	Additional guidance	Mark
iii	(there will be more) friction (between the axle and wheel)	inside the bearing	(1)

Q2.

Question number	Answer	Additional guidance	Mark
i	evaluation of gear ratio (1) 1:3 evaluation of number of revolutions (1) 6	 allow 1 mark if 60/20 or 20/60 or 20:60 or 60:20 seen award full marks for the correct answer without working	(2)

Question number	Answer	Additional guidance	Mark
ii	D 120mm down A and C are incorrect because gear T moves down B is incorrect because gear T moves 2mm per tooth		(1)

Q3.

Question number	Answer	Additional guidance	Mark
(i)	substitution (1) 40 × 1.7 evaluation (1) 68 Nm (1)	 award full marks for correct answer without working independent mark do not accept J (joules)	(3)

Question number	Answer	Additional guidance	Mark
(ii)	substitution (1) $68 = W \times 1.3$ rearrangement (1) $\frac{68}{1.3}$ evaluation (1) 52 (N)	award full marks for correct answer without working substitution and rearrangement in either order ecf moment from 4(c)(i) 52.3 (N)	(3)

Q4.

Question number	Answer	Additional guidance	Mark
(i)	substitution (1) moment of force = 150 x 1.8 evaluation (1) moment of force = 270 (N m)	 award full marks for the correct answer without working	(2) AO2

Question number	Answer	Additional guidance	Mark
(ii)	substitution (1) W x 0.95 = 270 rearrangement and evaluation (1) W =($\frac{270}{0.95}$)= 280 (N) any answer to 2 sf (1)	ecf from (i) any number that rounds to 280 (N) e.g. 284.2 (N) award 2 marks to here for the correct answer without working	**(3)** **AO2**

Q5.

Question Number	Answer	Additional guidance	Mark
(i)	substitution (1) 375 x 1.4 evaluation (1) 525 (Nm)	525 to any other power of 10 scores 1 mark award full marks for the correct answer without working	**(2)** **A02.1**

Question Number	Answer	Additional guidance	Mark
(ii)	an explanation linking: the distance (from the pivot) is increased (1) increasing the moment/turning effect of the force (1)	 accept further away accept (makes it) easier to turn / lift accept less force / effort (to move)	(2) AO2.2

Q6.

Question number	Answer	Additional guidance	Mark
	substitution (1) (moment) = 200 x 3(.0) evaluation (1) 600 (Nm) unit (1) Nm	 award full marks for correct answer without working independent mark ignore J / Joules	(3) AO2

Q7.

Question number	Answer	Additional guidance	Mark
	substitution (1) (moment =) 4(.0) x 5(.0) (/100) evaluation (1) (moment =) 0.2(0) (Nm)	2 to any incorrect power of ten scores 1 mark e.g. 20 or 2000 etc award full marks for the correct answer without working	**(2)** **AO2**

Q8.

Question number	Answer	Additional guidance	Mark
	rearrangement (1) force up = (force down × distance of force down from pivot)/distance of force up from pivot substitution into correct equation (1) $F = \frac{120 \times 1.3}{0.40}$ answer (1) 390 (N)	award full marks for correct numerical answer without working	**(3)**

Q9.

Question Number	Answer	Additional guidance	Mark
(i)	(In every second), distance moved by chain around large gear = distance moved by chain around small gear (1) 2 x 48 = turns x 12 rearrangement and evaluation (1) 8 (turns each second)	accept use of gear ratio seen or implied e.g. 4:1 or 4/1 or 48:12 or 48/12 or converse e.g. 1:4 award full marks for the correct answer without working	**(2)**

Question Number	Answer	Additional guidance	Mark
(ii)	An explanation linking reduces friction/amount of thermal energy transferred (1) extra useful energy is available/less input energy is required (1) efficiency = useful energy transferred (by the bicycle) ÷ total energy supplied (to the bicycle) (1)	 (oil provides) lubrication less energy wasted allow for the last **two** mark points; **either** less input energy is required to produce the same output for **2** marks **or** more output energy is available for the same input energy for **2** marks	**(3)**

Q10.

Question Number	Answer	Additional guidance	Mark
	anticlockwise moment (1) 4 x 20 = 80 (N cm) **OR** substitution (1) X x 40 = 4 x 20 evaluation (1) X = 2.0 (N)	accept 4 x 0.2 = 0.8 (N m) accept 4 x 2 = 8 (ratio idea) accept rearranged $X = \frac{4 \times 20}{40}$ accept X x 0.40 = 4 x 0.20 accept X x 4 = 4 x 2 accept 2 (N) award full marks for the correct answer without working	**(2)** **AO2.1** **AO2.2**