Questions

Q1.

A student investigates magnetism using two toys as shown in Figure 14.

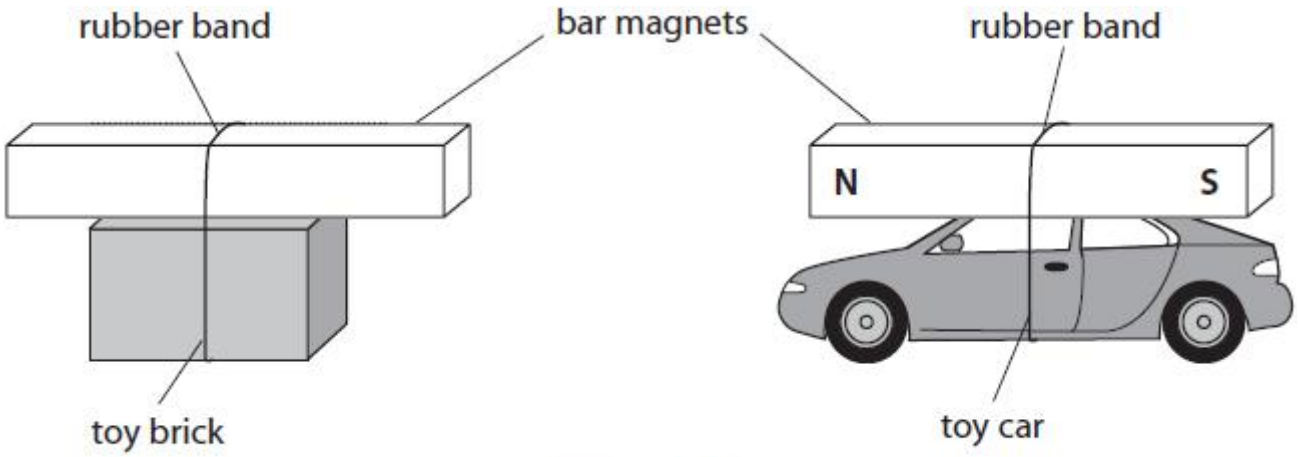

Figure 14

(i) There is a magnet attached to the top of each toy.

The student moves the toy brick towards the toy car.
The magnet on the toy brick repels the magnet on the toy car.
On Figure 14, label the north pole and the south pole on the magnet attached to the toy brick.

(1)

(ii) Explain why the toy car starts to move only when the toy brick gets near to the toy car.

(2)

.....

.....

.....

.....

(iii) The student thinks that two magnets on top of each other will produce a magnetic field that is stronger than the
magnetic field from a single magnet.

The student has a metre rule and more magnets available.
Describe how the student could develop this investigation to test this theory.

(4)

.....

.....

.....

.....

.....

.....

.....

.....

(Total for question = 7 marks)

Q2.

A student's mobile phone has an app to measure a magnetic field.

The student places the phone on a table and rotates the phone until it is pointing north.

There are no magnets near to the phone.

Figure 10 shows the display on the screen of the phone.

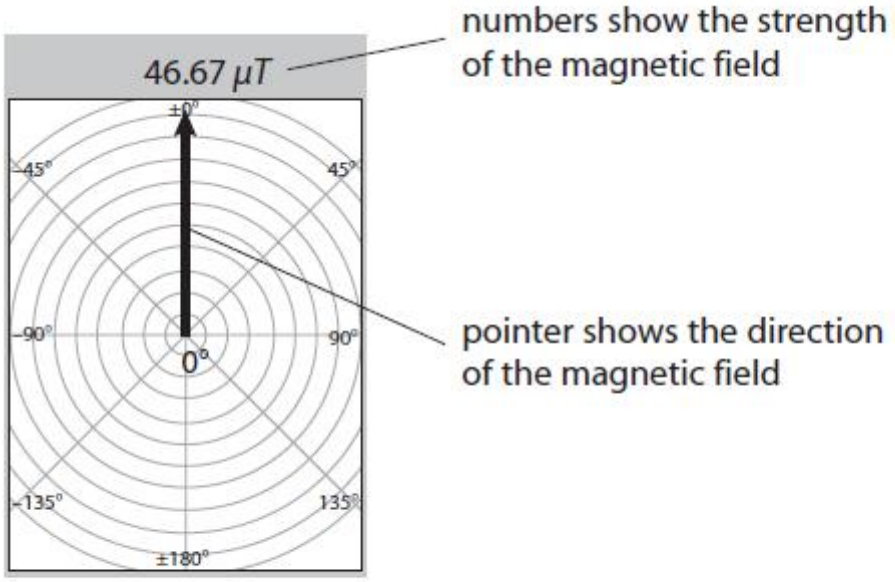

(Source: adapted from MGS Lite app for iPhone)

Figure 10

(i) State why the strength of the magnetic field shown is not zero.

(1)

.....

.....

The student places a magnet near to the phone on the table.

Figure 11 shows the magnet and the new display on the screen.

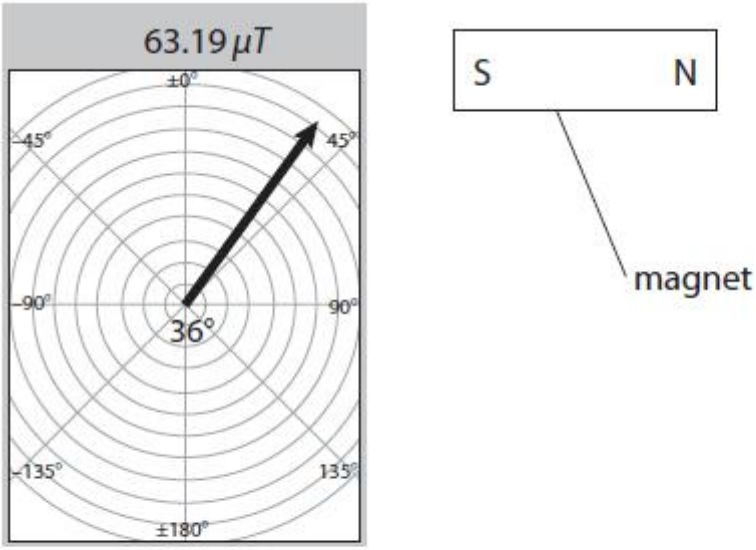

(Source: adapted from MGS Lite app for iPhone)

Figure 11

(ii) State **two** changes in the magnetic field measured by the phone from Figure 10 to Figure 11.

(2)

1 .....

.....

2 .....

.....

(iii) Describe how the student could use the mobile phone to investigate the strength of the magnetic field at different distances from the magnet.

(3)

.....

.....

.....

.....

.....

(Total for question = 6 marks)

Q3.

One use of a magnet is in a plotting compass.

(i) Explain how a plotting compass can be used to show that the Earth has a magnetic field.

(2)

.....

.....

.....

.....

(ii) State the name of a device that uses a permanent magnet.

(1)

.....

.....

(Total for question = 3 marks)

Q4.

Figure 1 shows a magnet, P, hanging from a support.

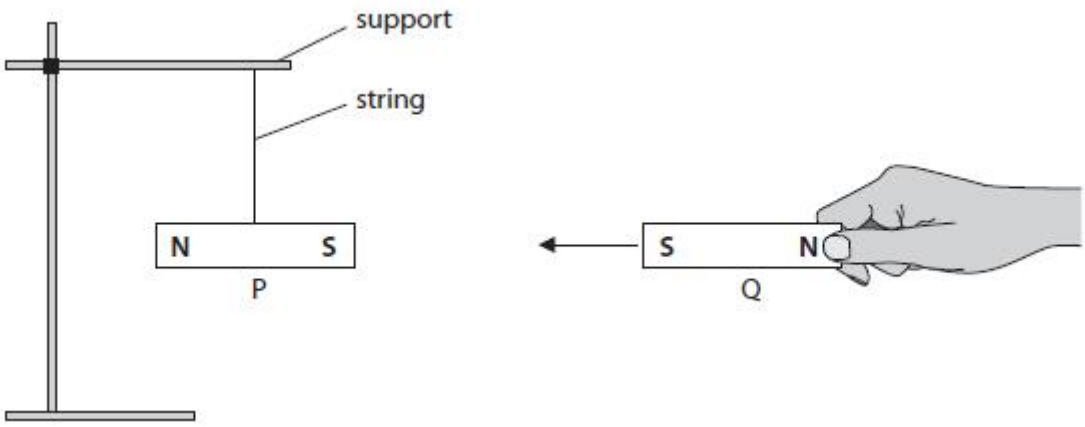

Figure 1

Explain what happens to magnet P when another magnet, Q, is brought towards it as shown.

(2)

.....

.....

.....

.....

(Total for question = 2 marks)

Q5.

Figure 3 shows a coil of wire called a solenoid.

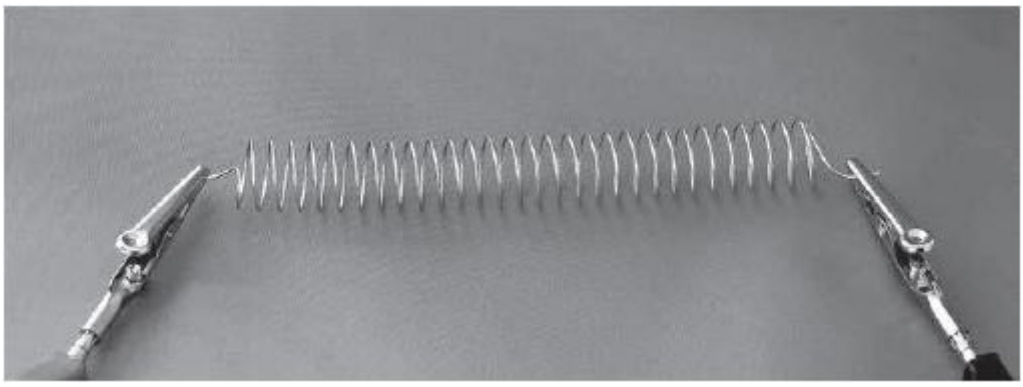

Figure 3

Figure 4 gives information about the magnetic field of a solenoid.

description of the magnetic field	part of magnetic field	
	inside the coil	outside the coil
strong	✓	×
weak	×	✓
uniform	✓	×
non-uniform	×	✓

Figure 4

Describe how a student can determine the shape of the magnetic field around the solenoid.

(2)

.....

.....

.....

.....

(Total for question = 2 marks)

Q6.

Figure 11 shows the magnetic field around a bar magnet.

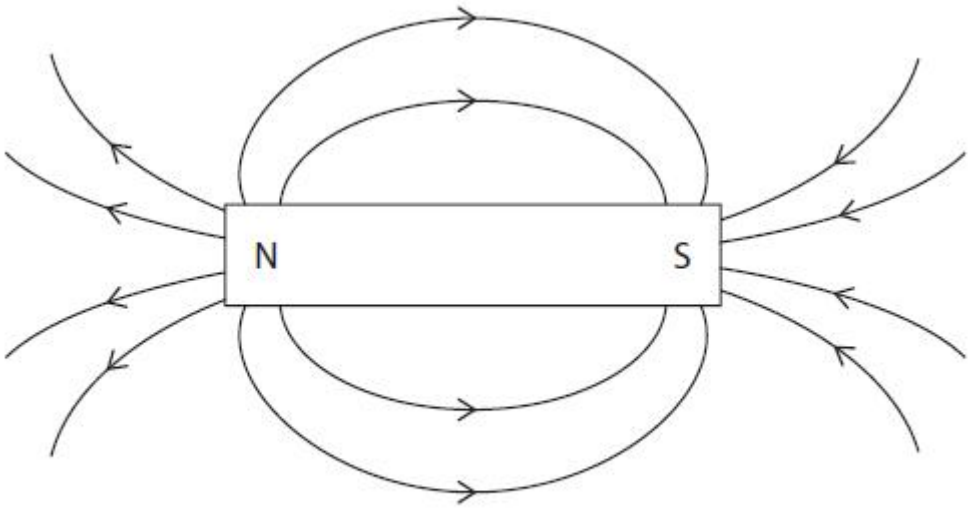

Figure 11

Iron filings are sprinkled onto the magnet.

(i) On Figure 11, draw an X where most of the iron filings will stick.

(1)

(ii) Explain why most of the iron filings will stick to the point you have labelled with an X.

(2)

.....

.....

.....

.....

(Total for question = 3 marks)

Q7.

Figure 7 shows a wire passing through a piece of card.
The wire carries an electric current.

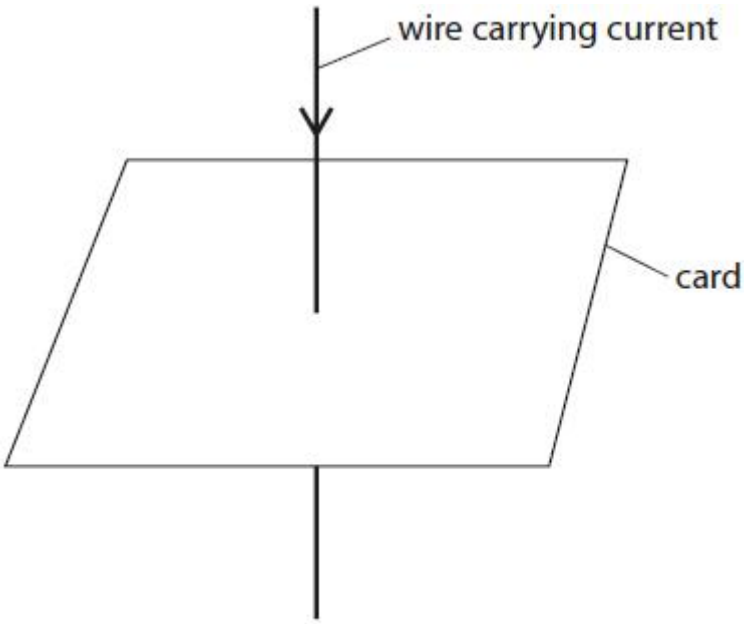

Figure 7

(i) Draw **one** magnetic field line on Figure 7, to show the shape of the magnetic field produced by the current.

(1)

(ii) Draw **one** arrow on the field line you have drawn to show the direction of the magnetic field.

(1)

(Total for question = 2 marks)

Q8.

Figure 3 shows a coil of wire called a solenoid.

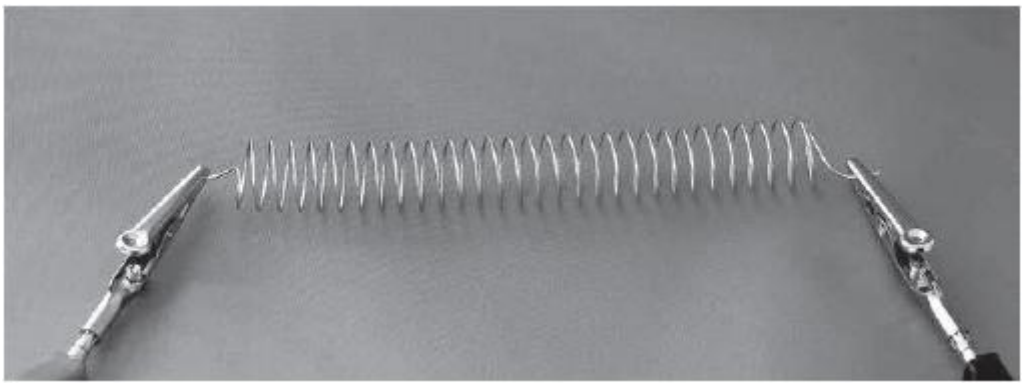

Figure 3

Figure 4 gives information about the magnetic field of a solenoid.

description of the magnetic field	part of magnetic field	
	inside the coil	outside the coil
strong	✓	×
weak	×	✓
uniform	✓	×
non-uniform	×	✓

Figure 4

Draw lines on Figure 5 to show the shape of the magnetic field **inside** the solenoid.

Use information from Figure 4.

(1)

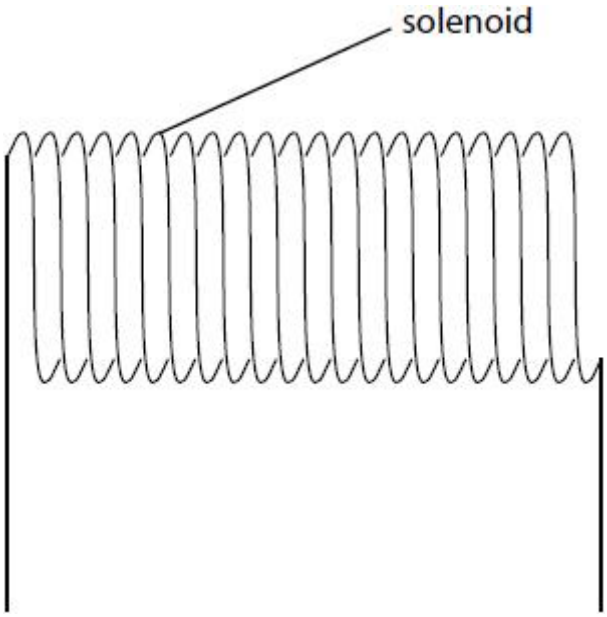

Figure 5

(Total for question = 1 mark)

Q9.

A student measures the strength of the magnetic field at several distances from the wire in Figure 7.
Figure 8 shows most of the student's results.

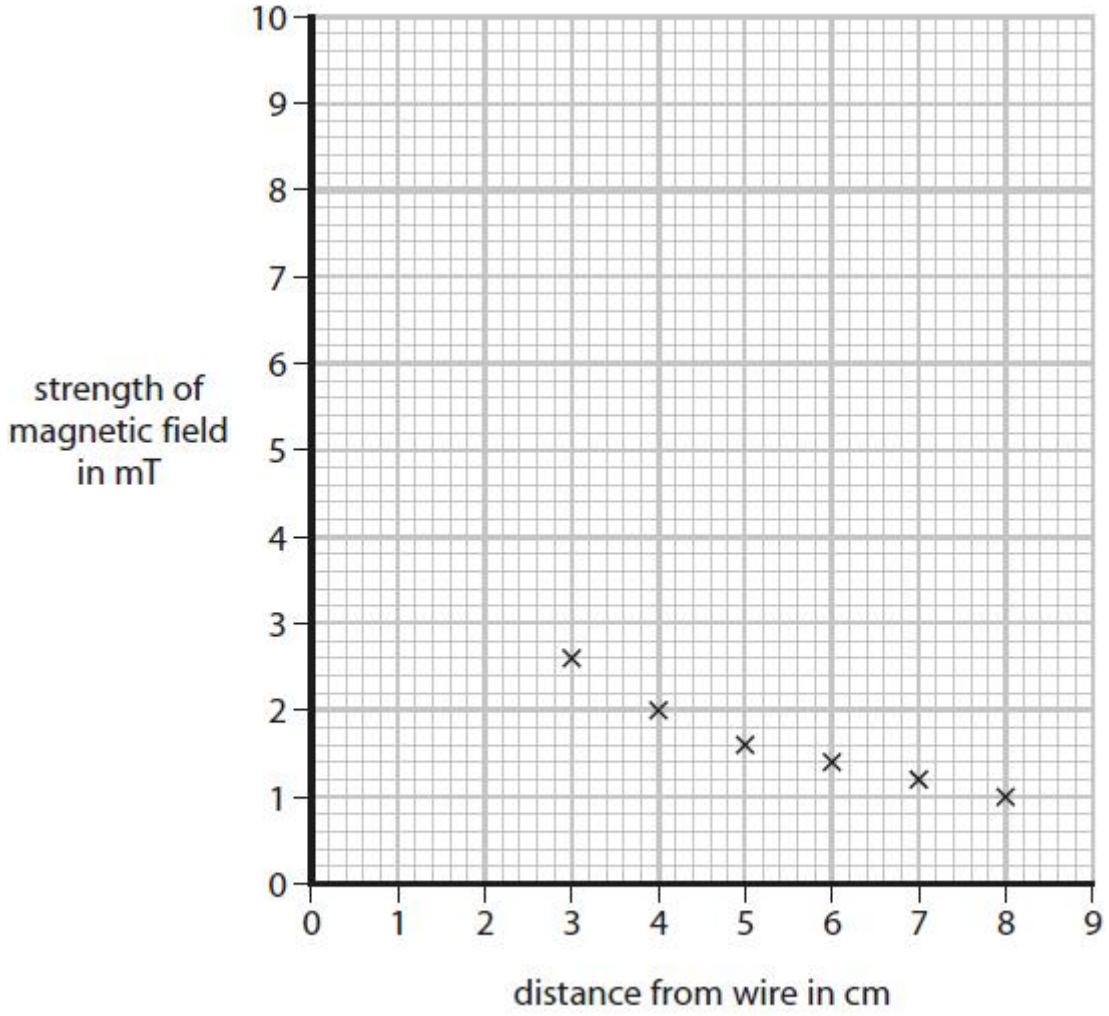

Figure 8

Figure 9 shows two extra sets of results.
mT is a unit of strength of a magnetic field.

distance from wire in cm	strength of magnetic field in mT
1.0	8.1
2.0	3.9

Figure 9

(i) Plot the two extra points on Figure 8.

(2)

(ii) Draw a best fit curve on the graph in Figure 8.

(1)

(iii) Use the graph in Figure 8 to calculate the change in strength of magnetic field when the distance from the wire changes from 4 cm to 8 cm.

(2)

change in strength of magnetic field = ... mT

(iv) The distance from the wire affects the strength of the magnetic field.

State **one** other factor that affects the strength of the magnetic field.

(1)

.....

(Total for question = 6 marks)

Q10.

A student has

− a power pack
− a long piece of wire
− a stiff card
− iron filings

Describe how the student could use this equipment to show the shape of the magnetic field produced by a current in the wire.

You may draw a diagram to help with your answer.

(4)

.....

.....

.....

.....

.....

.....

.....

.....

(Total for question = 4 marks)

Mark Scheme

Q1.

Question number	Answer	Additional guidance	Mark
(i)	S N	allow s or south north	(1)

Question number	Answer	Additional guidance	Mark
(ii)	an explanation linking two from (strength of magnetic) field /force (1) (depends on) distance from the magnet (1)	 (magnets) attract / repel force / field is weaker when further away (from magnet) or reverse argument lines of force are further apart	(2)

Question number	Answer	Additional guidance	Mark
(iii)	a description to include four from		(4)
	move brick towards the car (1)	change distance between car and brick	
	until car (just) starts to move (1)		
	measure distance of brick from car/magnet (1)	measure how close car gets to the brick	
	repeat with 2 magnets (1)		
	compare distances (for one magnet and for two magnets) (1)		
	detail about procedure (1)	how to attach second magnet(s) how to measure distance where to measure take several readings and find average	
	conclusion or prediction (1)	if distance is bigger then it works	

Q2.

Question number	Answer	Additional guidance	Mark
(i)	the Earth/world/planet has a magnetic field / core(1)	Earth/world/planet has a north (and south) pole	(1) AO3

Question number	Answer	Additional guidance	Mark
(ii)	direction (of the field) has changed / rotated (1) (strength of the) field has **increased** (1)	(from 0 to) 36° from N to NE field is stronger (changed by) 16.52 (μT) numbers have increased (from 46.67 to 63.19)	(2) AO3

Question number	Answer	Additional guidance	Mark
(iii)	a description including **three** from use of equipment to measure distance (1) ruler / tape measure obtain a measurement (1) measure / record strength of the field (at a certain point) change the conditions (1) move the phone / magnet (to a different location) process the results (1) e.g. • draw a diagram • make a table • compare results/values • see when (field) stays constant	 measure the distance between phone and magnet rotate the phone/magnet	(3) AO3

Q3.

Question Number	Answer	Additional guidance	Mark
(i)	an explanation linking: (the compass needle) always points in the same direction (1) (because) the Earth's magnetic field exerts a force (on the needle) (1)	 accept points north / south ignore aligns with Earth's magnetic field do not accept (always) points towards core accept attracted to (magnetic) pole	(2) AO2.2

Question Number	Answer	Additional guidance	Mark
(ii)	any **one** from: motor/generator/ loudspeaker/ microphone / (plotting) compass	 accept any named device containing a permanent magnet e.g. door closer / fridge magnet / phone / any device with an electric motor / MRI ignore (bar) magnet	(1) AO2.1

Q4.

Question number	Answer	Mark
	An answer that provides a description by making reference to: • (P) moves / spins (1) • (the two S-poles) repel / N(-pole) and S(-pole) attract (1)	(2)

Q5.

Question number	Answer	Additional guidance	Mark
	An answer that combines the following points of understanding to provide a logical description: • plotting compass placed on card near wire and pencil mark made near N pole of compass (1) • move compass so S pole is above pencil mark and keep repeating this until arrive at starting point (1)	allow sprinkle iron filings on card tap card to allow filings to align with field	(2)

Q6.

Question Number	Answer	Additional guidance	Mark
(i)	X drawn in either of the shaded regions (1) 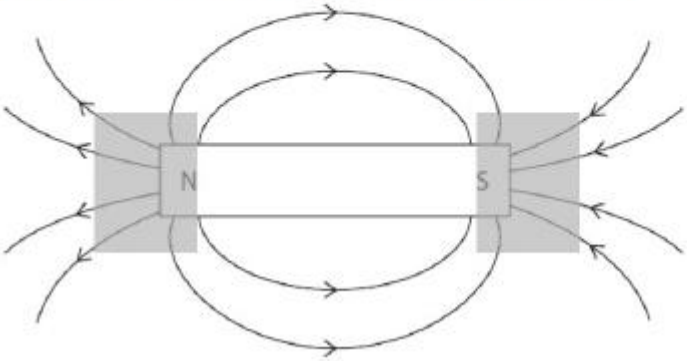 		(1) AO1.1

Question Number	Answer	Additional guidance	Mark
(ii)	the (magnetic) **field** is strongest (1) (because the field) lines are close(r) together (1)	accept strongest (magnetic) **force** allow more lines	(2) AO3.2a/2b

Q7.

Question number	Answer	Additional guidance	Mark
i	circle shown around wire (1)	allow tolerance for translation of 3D to 2D ignore any multiplicity of those circles	**(1)** **AO1**

Question number	Answer	Additional guidance	Mark
ii	arrow indicating a clockwise direction (for magnetic field line drawn for i) (1)		**(1)** **AO1**

Q8.

Question number	Answer	Additional guidance	Mark
	magnetic lines of force closely packed AND (almost) parallel (1)	ignore any arrows as direction of field is not required ignore any lines outside the coil 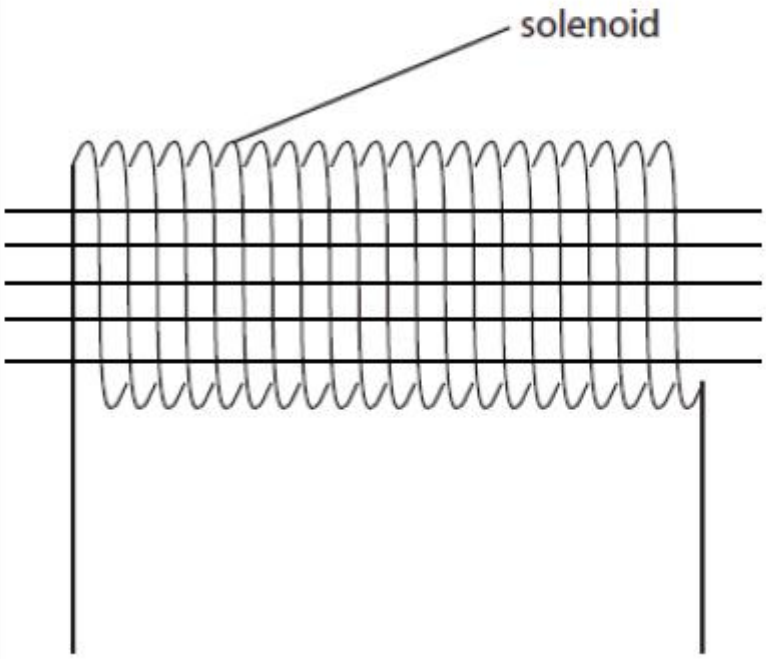 	**(1)**

Q9.

Question number	Answer	Additional guidance	Mark
i	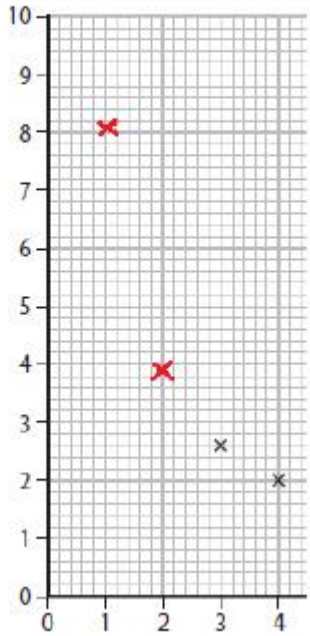 One mark for each point plotted correctly, to within ± 1 small square		(2) AO2

Question number	Answer	Additional guidance	Mark
ii	smooth curve drawn fitting the plotted points (1)	judge by eye	(1) AO2

Question number	Answer	Additional guidance	Mark
iii	substitution using an attempt at calculation – any subtraction seen (1) e.g. 2(.0) – 1(.0) evaluation (1) (-) 1(.0) (mT)	 accept any number that rounds to 1.0 award full marks for correct answer without working	(2) AO3

Question number	Answer	Mark
iv	(size of) current	(1) AO1

Q10.

Question Number	Answer	Additional guidance	Mark
	An answer that combines four of the following points. MP1: Put wire {through card / near card / under card / over card / round rolled up card } (1) MP2: Put iron filings on card / around wire (1) MP3: Connect wire to power pack One wire is acceptable (1) MP4: Switch on or reference to current / charges flowing (in wire) NOT in filings (1) MP5: Filings attracted / moving / see if wire attracts filings (1) MP6: Pattern seen in filings – circles / lines / onion (1)	IGNORE use of apparatus not specified in the list (Iron nails etc) 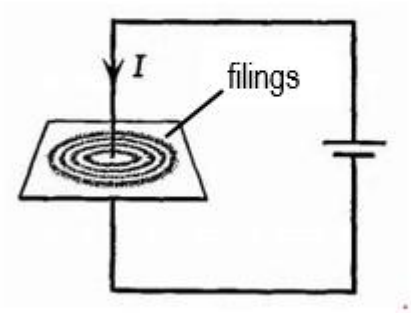 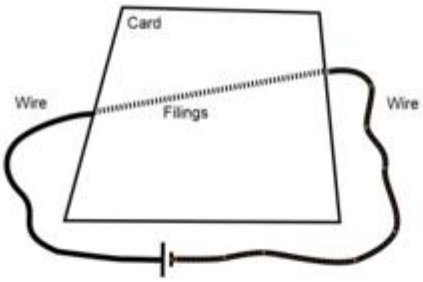 marking points can be scored from a diagram filings show shape of field	**(4)**