## Questions

**Q1.**

A student uses a compass to investigate the magnetic field near a bar magnet.

The student places the compass near the bar magnet as shown in Figure 6.

**Figure 6**

(i) Mark the north pole of the bar magnet with an 'N' in Figure 6.

**(1)**

(ii) State two ways in which the investigation could be developed to show the shape of the magnetic field around the bar magnet.

You may add to Figure 6 to help with your answer.

**(2)**

1 .....

.....

2 .....

.....

**(Total for question = 3 marks)**

**Q2.**

Which of these materials would be the most suitable for making a temporary magnet?

**(1)**

- ☒ **A** copper
- ☒ **B** iron
- ☒ **C** plastic
- ☒ **D** steel

**(Total for question = 1 mark)**

**Q3.**

A teacher prepares some equipment to demonstrate electromagnetism.

Figure 9 shows the equipment.

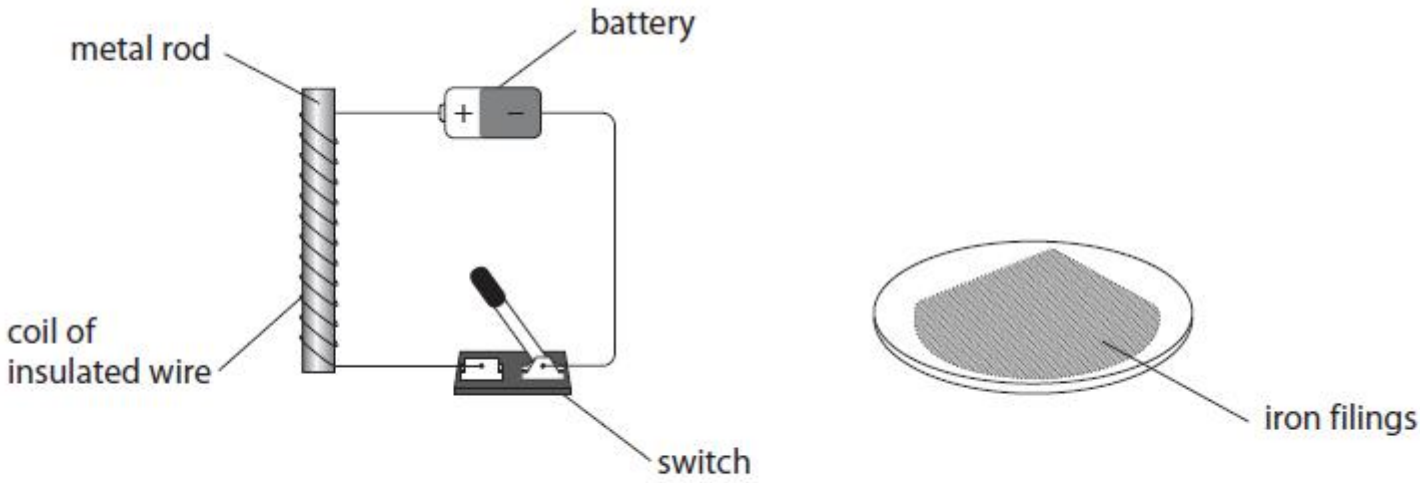


**Figure 9**

The teacher wants to show that iron filings

- are picked up by the metal rod when the switch is closed
- fall off the metal rod when the switch is opened again.

(i) Suggest a suitable metal for the rod.

**(1)**

.....

(ii) Give **two** reasons for your choice.

**(2)**

1 .....

.....

2 .....

.....

**(Total for question = 3 marks)**

**Q4.**

Figure 8 shows the shape of the magnetic field lines around a bar magnet.

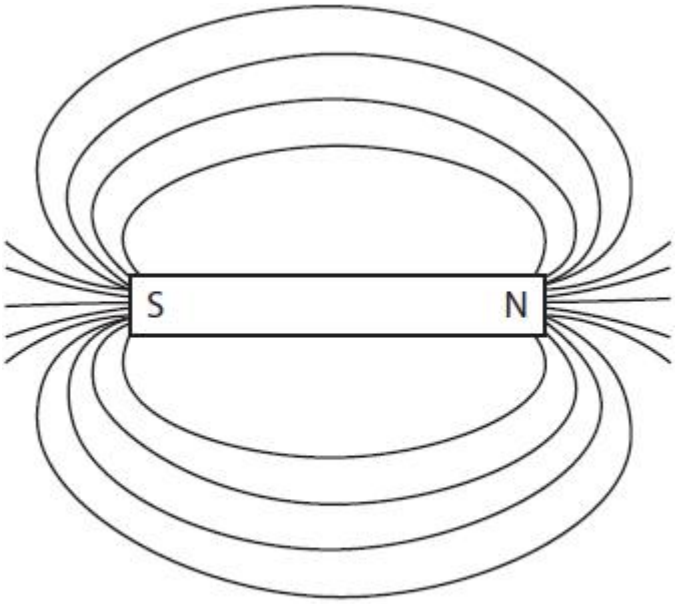


**Figure 8**

(i) Draw **one** arrow on a magnetic field line in Figure 8 to show the direction of that magnetic field line.

**(1)**

(ii) Draw an **X** on Figure 8 to show where the magnetic field is strongest.

**(1)**

(iii) Give a reason why Figure 8 shows the magnetic field is strongest at point **X**.

**(1)**

.....

.....

**(Total for question = 3 marks)**

**Q5.**

A student places two magnets on a smooth bench.

The student holds the magnets close to each other, as shown in Figure 9.

**Figure 9**

(i) Draw some magnetic field lines on Figure 9 to show the shape of the magnetic field **between** the two magnets.

**(2)**

(ii) The student is holding the two magnets on the smooth bench.

State what would happen if the student let go of one of the magnets.

**(1)**

.....

.....

**(Total for question = 3 marks)**

**Q6.**

Figure 9 shows the magnetic field around a wire carrying a current.

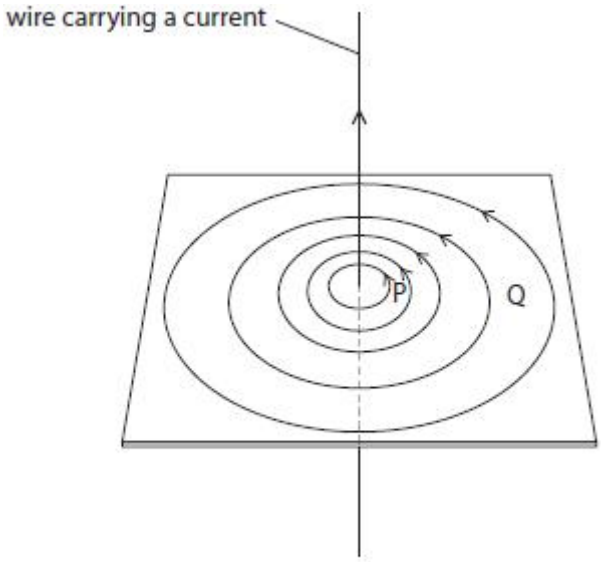


**Figure 9**

(i) State how you can tell from Figure 9 that the strength of the field is greater at P than at Q.

**(1)**

.....

.....

(ii) The magnetic field strength is measured at P for different values of current in the wire.

The results of this investigation are shown in Figure 10.

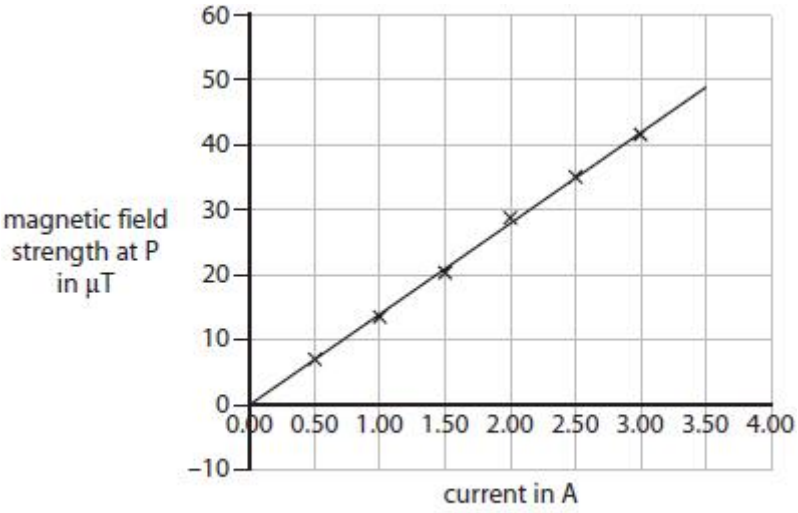


**Figure 10**

Describe the relationship between magnetic field strength and current.

**(2)**

.....

.....

.....

.....

**(Total for question = 3 marks)**

**Q7.**

Figure 4 shows the magnetic field produced by a current in a long, straight wire.

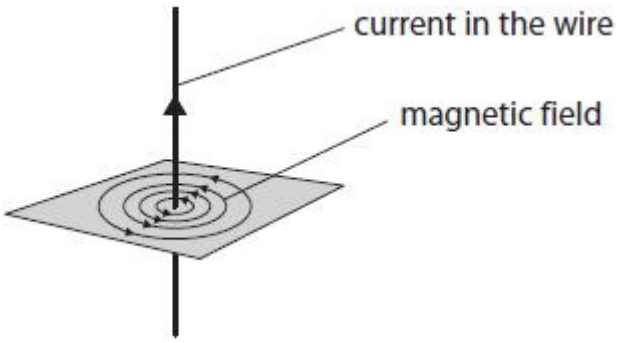


**Figure 4**

Which row of the table is correct when the strength of the magnetic field is greatest?

**(1)**

| | distance from the wire | current |
|---|---|---|
| ☐ A | small | small |
| ☐ B | small | large |
| ☐ C | large | small |
| ☐ D | large | large |

**(Total for question = 1 mark)**

**Q8.**

Figure 5 shows a magnet holding some paper clips.

**Figure 5**

Describe how a student could show that the paper clips are induced magnets.

**(2)**

.....

.....

.....

.....

**(Total for question = 2 marks)**

**Q9.**

A student uses iron filings to show the pattern of a magnetic field around a bar magnet.

Figure 2 shows the pattern the student produced.

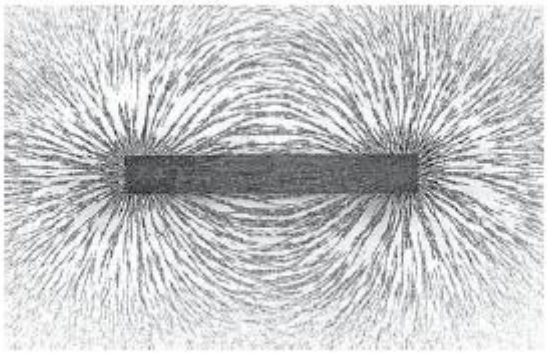

**Figure 2**

(i) Describe how you can tell from Figure 2 where the magnetic field is strongest.

**(2)**

.....

.....

.....

.....

(ii) The bar magnet is placed on a sheet of paper. Describe how the student could plot the shape and show the direction of the magnetic field around the magnet.

**(3)**

.....

.....

.....

.....

.....

.....

**(Total for question = 5 marks)**

**Q10.**

Describe how you could show that the Earth has a magnetic field.

**(2)**

.....

.....

.....

.....

**(Total for question = 2 marks)**

## Mark Scheme

Q1.

| Question Number: | Answer | Additional guidance | Mark |
|---|---|---|---|
| (i) | | N must be at the end of the bar, not at the end of the compass needle | **(1)**<br>AO 3 3a |

| Question Number: | Answer | Additional guidance | Mark |
|---|---|---|---|
| (ii) | any two developments from:<br><br>use a compass in various positions / more compasses (1)<br><br>plot more points/mark direction of compass(point)/ join the dots (1)<br><br>sprinkle/add iron filings (1)<br><br>give more than one (magnetic field) line (1) | marks can be taken from text or diagram<br><br>allow 'around' 'on', 'near' the magnet etc<br><br>series of dots / several compasses end to end | **(2)**<br>AO 3 3a |

**Q2.**

| Question Number: | Answer | Mark |
|---|---|---|
| | B iron<br><br>**The only correct answer is B**<br><br>***A*** *is not correct as copper is non-magnetic*<br>***C*** *is not correct as plastic is non-magnetic*<br>***D*** *is incorrect, as steel is only suitable for a permanent magnet* | **(1)**<br>AO 1 1 |

**Q3.**

| Question number | Answer | Additional guidance | Mark |
|---|---|---|---|
| **(i)** | (soft) iron (1) | allow (in this context)<br>nickel (alloys)<br>cobalt<br>steel | **(1)**<br><br>**AO1** |

| Question number | Answer | Additional guidance | Mark |
|---|---|---|---|
| **(ii)** | would be magnetised (when switch is closed) (1)<br><br>would be demagnetised when switch is open (1) | (is) magnetic<br>(is) electromagnetic<br>induced magnetism<br><br>magnetism can be switched off<br><br>accept for either mark<br>not permanent magnet<br>**or**<br>temporary magnet | **(2)**<br><br>**AO1** |

**Q4.**

| Question | Answer | Additional guidance | Mark |
|---|---|---|---|
| **(i)** | arrow(s) going from N to S on any field line (1) | any contradictory arrow loses the mark | **(1)**<br>**AO1.1** |

| Question | Answer | Additional guidance | Mark |
|---|---|---|---|
| (ii) | **X** drawn close to N or S (1) | 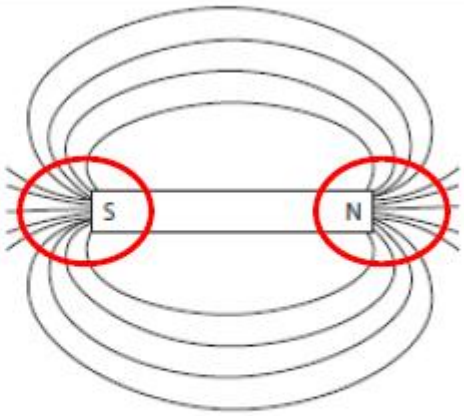 <br>any X drawn outside either ellipse loses the mark - judge by eye | (1)<br>AO1.1 |

| Question | Answer | Additional guidance | Mark |
|---|---|---|---|
| (iii) | **one** reason from:<br><br>where the (field) lines are close(st) (to each other) (1)<br><br>close to the pole(s) (1) | <br><br>accept where there are most lines<br><br>ignore close to the magnet | (1)<br>AO1.1 |

**Q5.**

| Question | Answer | Additional guidance | Mark |
|---|---|---|---|
| (i) | at least 1 straight line between the N and S (1)<br><br>at least 1 curved line between N and S (1) | 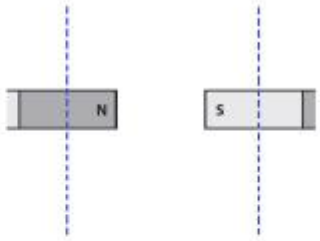 <br>ignore lines that start or end outside the region identified<br><br>do not accept any contradictory lines within the region<br><br>ignore any arrows | (2)<br>AO2.2 |

| Question | Answer | Additional guidance | Mark |
|---|---|---|---|
| (ii) | (it would) move towards the other magnet (1) | idea of attraction/joining together | (1)<br>AO3.3 |

**Q6.**

| Question number | Answer | Additional guidance | Mark |
|---|---|---|---|
| (i) | (magnetic field) {lines / circles / pattern} closer (together at P) (1) | (magnetic field) lines more concentrated (at P)<br><br>(magnetic field) lines further apart / less concentrated at Q<br><br>ignore idea that P is closer (to the wire than Q) | (1)<br>AO1 |

| Question number | Answer | Additional guidance | Mark |
|---|---|---|---|
| (ii) | a description to include<br>as current increases magnetic field strength increases (1)<br><br>linear/ increases in even steps / doubling idea / proportional (1) | allow positive correlation<br><br>'directly proportional' scores 2 marks | (2)<br>AO3 |

**Q7.**

| Question Number: | Answer | Mark |
|---|---|---|
| | B \| small \| large<br><br>**The only correct answer is B**<br><br>***A*** *is not correct because the current is small*<br>***C*** *is not correct because the distance from the wire is large*<br>***D*** *is not correct because the distance from the wire is large* | (1)<br>AO 1 1 |

**Q8.**

| Question Number: | Answer | Additional guidance | Mark |
|---|---|---|---|
| | a description to include:<br><br>remove the magnet (from the paper clips)(1)<br><br>paperclips no longer attracted to each other (1) | <br><br><br><br>accept no longer magnetic | (2)<br>AO 3 1a<br>AO 3 1b |

**Q9.**

| Question number | Answer | Additional guidance | Mark |
|---|---|---|---|
| (i) | An answer that provides a description by making reference to:<br>• concentration/density (of iron filings) (1)<br>• greatest at strongest field (1) | (filings) close together / bunched up | (2) |

| Question number | Answer | Mark |
|---|---|---|
| (ii) | An answer that combines the following points to provide a logical description of the method:<br>• use of (plotting) compass(es) (1)<br>• (place) at various different points (around the magnet) (1)<br>• the direction is the way the compass points (1) | (3) |

**Q10.**

| Question Number: | Answer | Additional guidance | Mark |
|---|---|---|---|
| | a description to include:<br><br>use a compass (1)<br><br>always points in the same direction / will point north (1) | accept reasonable alternatives such as suspended magnet needles on cork in water | (2)<br>AO 3 2a |