Questions

Q1.

A student uses the apparatus in Figure 17 to determine the specific heat capacity of water.

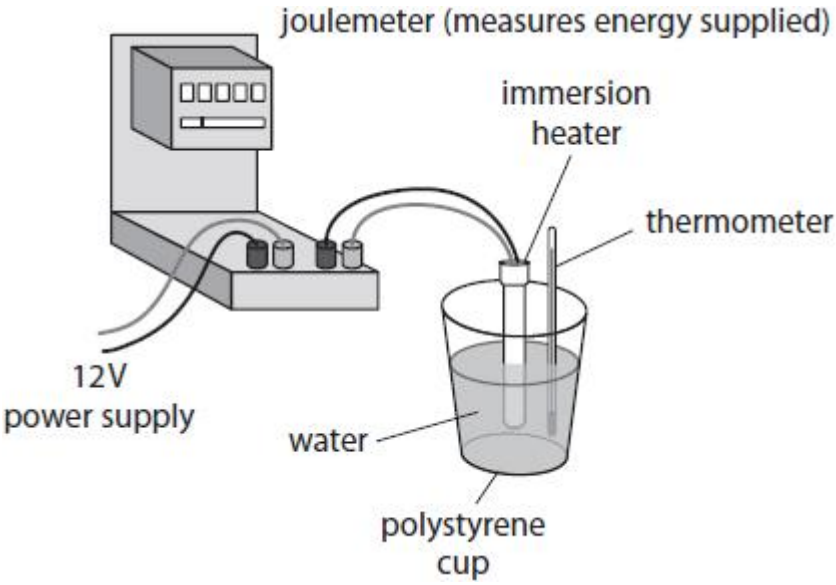

Figure 17

(i) State the measurements needed to calculate the specific heat capacity of water.

(4)

.....

.....

.....

.....

.....

.....

.....

.....

(ii) State **two** ways that the apparatus could be adapted to improve the procedure.

(2)

1 .....

.....

2 .....

.....

(Total for question = 6 marks)

Q2.

A student sets up an experiment to measure the specific heat capacity of a metal.

Figure 8 shows the apparatus.

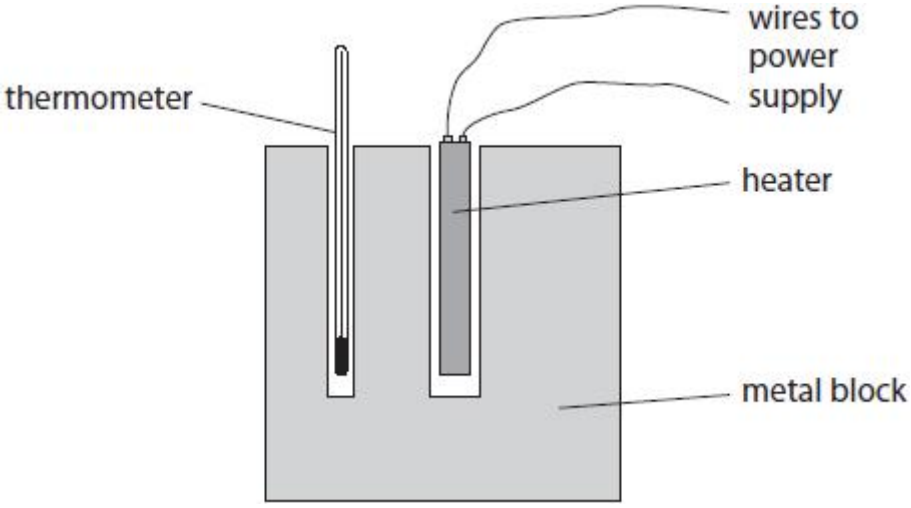

Figure 8

The heater is connected to a power supply and has a power of 50 W.

The student switches on the heater and measures the temperature rise after 5 minutes.

(i) State **two** improvements the student could make to the experiment.

(2)

1 .....

.....

2 .....

.....

(ii) Figure 9 shows the student's results.

mass of metal block	0.92 kg
power of heater	50 W
starting temperature	20 °C
finishing temperature	54 °C
time	300 s

Figure 9

Use the data in Figure 9 to calculate a value for the specific heat capacity of the metal.
Use the equation

$$\text{specific heat capacity} = \frac{\text{power} \times \text{time}}{\text{mass} \times \text{temperature rise}}$$

(3)

specific heat capacity = ... J/kg °C

(Total for question = 5 marks)

Q3.

A student investigates the pressure and volume of some trapped gas.
Figure 4 shows the apparatus used.

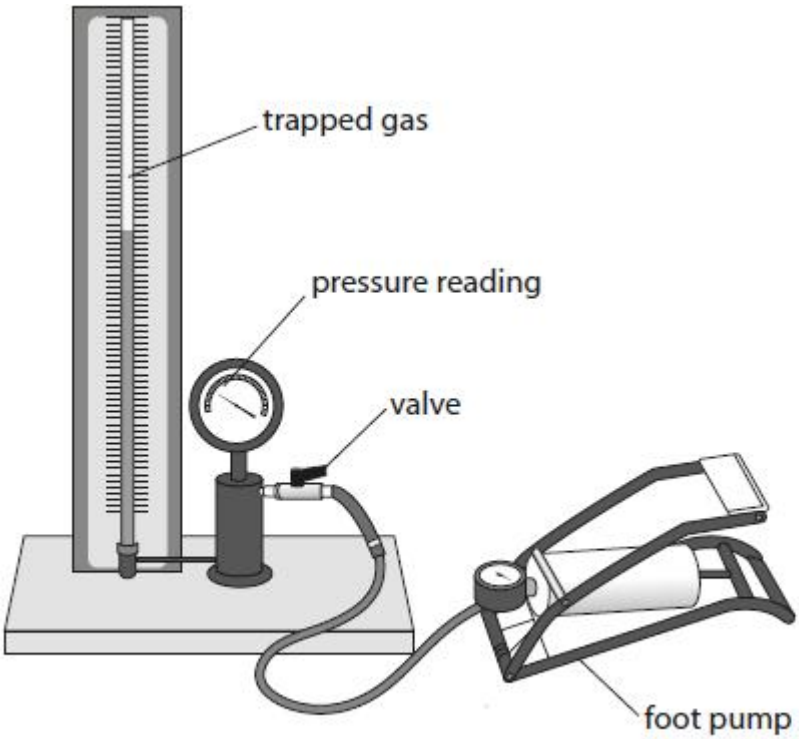

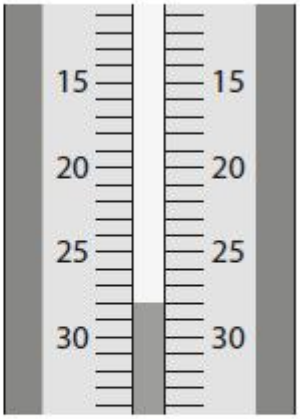

enlarged view of volume scale

Figure 4

Figure 5 shows the student's table of results.

p	V	$p \times V$
100	28.0	2800
123	23.0	2829
140	20.0	2800
160	18.0	2880
180	16.5	2970

Figure 5

(i) Suggest what the student should add to the headings of the table in Figure 5.

(1)

.....

.....

(ii) Use Figure 5 to estimate the volume of gas for a pressure reading of '170'.

(2)

volume of gas = ...

(iii) Suggest **two** ways the student could improve the investigation.

(2)

1 .....

.....

2 .....

.....

(iv) Explain whether the values, in the column headed '$p \times V$' in Figure 5, fit the equation

$$p_1 \times V_1 = p_2 \times V_2$$

(3)

.....

.....

.....

.....

.....

.....

(Total for question = 8 marks)

Q4.

A student wants to determine the specific heat capacity of copper.

Figure 20 shows a piece of copper, with a thread tied around it, in a glass beaker of boiling water.

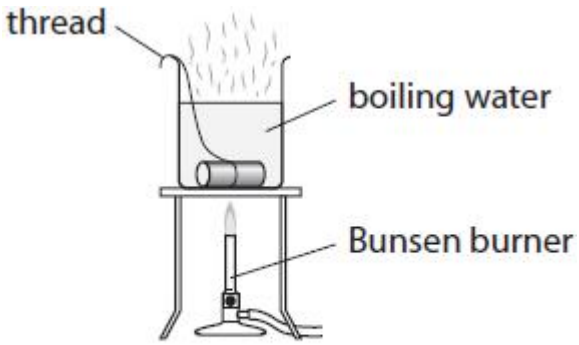

Figure 20

The student leaves the piece of copper in the boiling water so that the copper reaches a temperature of 100 °C.

The student uses the thread to take the piece of copper out of the boiling water.

The student puts the hot piece of copper into a different beaker of cold water at 20 °C.

The apparatus is shown in Figure 21.

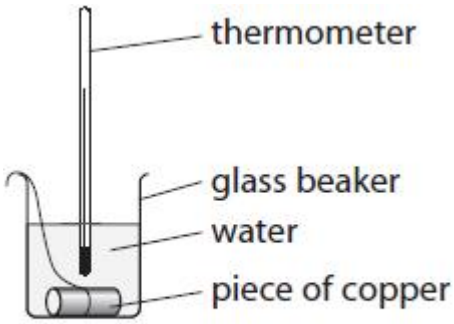

Figure 21

The student assumes that the thermal energy gained by the water equals the thermal energy lost by the piece of copper.

The water and copper both reach a temperature of 22 °C.

The cold water gains 1050 J of energy.

The mass of the piece of copper is 0.058 kg.

(i) Calculate a value for the specific heat capacity of copper, using these results.

Use the equation

change in thermal energy = mass × specific heat capacity × change in temperature

$$\Delta Q = m \times c \times \Delta\theta$$

(2)

specific heat capacity of copper from these results = ... J/kg °C

(ii) The value for the specific heat capacity of copper obtained from the student's results is lower than the correct value.

State **two** ways that the experiment could be improved to give a value that is closer to the correct value.

(2)

1 .....

.....

2 .....

.....

(Total for question = 4 marks)

Q5.

(i) A student heats an aluminium block, as shown in Figure 9.

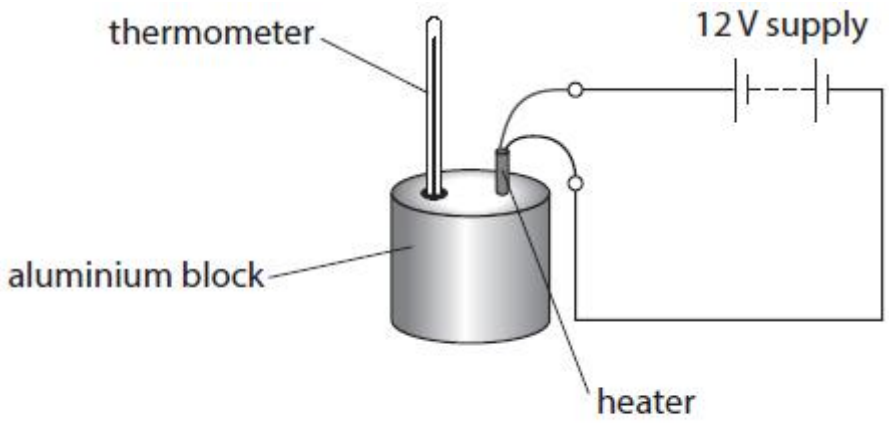

Figure 9

The aluminium block has a mass of 0.96 kg.

The specific heat capacity of aluminium is 920 J/kg °C.

The temperature of the block increases from 18 °C to 35 °C.

Calculate the change in thermal energy of the aluminium block.

Use the equation

change in thermal energy = mass × specific heat capacity × change in temperature

(2)

change in thermal energy = ... J

(ii) Suggest **one** way the student could reduce the energy loss from the aluminium block during the experiment.

(1)

.....

.....

(iii) The thermometer does not show the maximum temperature reached by the aluminium block until some time after the heater is switched off.

Give **one** reason for this.

(1)

.....

.....

(Total for question = 4 marks)

Q6.

Figure 15 shows an oxygen cylinder used to provide patients with oxygen in hospital.

(Source: Pearson Asset Library)

Figure 15

The volume of the cylinder, V_1 , is 2.3 litres.

The pressure of gas in the cylinder, P_1 , is 15 MPa.

Oxygen is released from the cylinder to the patient at a pressure of P_2 = 0.35 MPa.

(i) Show that the total volume, V_2 , of oxygen that can be released to the patient is about 100 litres at this pressure.

Use the equation

$$V_2 = \frac{P_1 \times V_1}{P_2}$$

(2)

(ii) The oxygen from the cylinder flows to the patient at 6 litres/minute.

Calculate the time taken for the 100 litres of oxygen to be used up at this rate.

(1)

time taken ..... minutes

(iii) A patient requires oxygen for a longer period of time.

Suggest what could be done to supply oxygen over this longer period of time.

(1)

.....

.....

(Total for question = 4 marks)

Q7.

* The table shows some properties of two materials used as thermal insulation.

The higher the R-value, the better the thermal insulating properties of the material.

material	R-value	fire resistance
fibreglass, made from sand	R-3.3	non-flammable
polystyrene, made from petroleum oil	R-4.0	melts at 270 °C and spreads fire very quickly

Assess which of these materials may be the more suitable to use as thermal insulation in a building.

Your answer should compare the properties of fibreglass and polystyrene given in the table.

(6)

.....

.....

.....

.....

.....

.....

.....

.....

.....

.....

.....

.....

.....

.....

.....

(Total for question = 6 marks)

Q8.

A student determines the density of a liquid.

The student puts an empty measuring cylinder on a balance (Figure 10a).
The student then adds liquid to the measuring cylinder (Figure 10b).

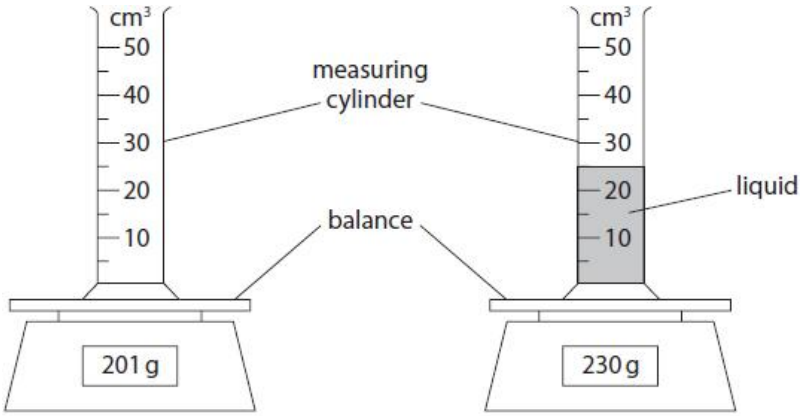

Figure 10a **Figure 10b**

Calculate the mass of liquid added and the volume of liquid added.

Use the information in Figures 10a and 10b.

(i) mass of liquid added = ... g

(1)

(ii) volume of liquid added = ... cm^3

(1)

(iii) Which equation should the student use to calculate the density of the liquid?

(1)

☒ **A** density = mass + volume

☒ **B** density = mass − volume

☒ **C** density = mass × volume

☒ **D** $\text{density} = \frac{\text{mass}}{\text{volume}}$

(iv) State **two** improvements the student could make to this investigation.

(2)

1 .....

.....

2 .....

.....

(Total for question = 5 marks)

Q9.

Aluminium has a melting point of 660 °C.

The absolute zero of temperature is −273 °C.

(i) Calculate the melting point of aluminium in kelvin.

(1)

melting point of aluminium = ... K

(ii) Describe the motion of particles in liquid aluminium (above 660 °C).

(2)

.....

.....

.....

(Total for question = 3 marks)

Q10.

A student boils some water.

Calculate the amount of thermal energy needed to change 60.0 g of water to steam at its boiling point.

The specific latent heat of vaporisation of water, L, is 2.26×10^6 J/kg.

Use the equation

$$Q = m \times L$$

(2)

amount of thermal energy = ... J

(Total for question = 2 marks)

Mark Scheme

Q1.

Question number:	Answer	Additional guidance	Mark
(i)			(4) AO 1 2
	(measurement of) the mass of water (1)	accept volume / weight of water ignore amount	
	(measurement of) the temperature (rise/change) (1)	accept (take) thermometer reading	
	(measurement of) the energy supplied / from heater (1)	accept (take) reading of the joulemeter ignore 'change in thermal energy' (from equation)	
	detail of any of the above (1)	e.g. measure temp at the start and end or measure mass of empty cup or start and end readings on the meter	

Question Number:	Answer	Additional guidance	Mark
(ii)	any two improvements from:	both marks can be scored in one answer space ignore repeating readings ignore increase voltage / power / energy ignore use of clamp to hold thermometer / heater	(2) AO 3 3b
	add lid /cover (1)		
	add lagging / insulation (1)	accept use better insulator or better insulated / thicker cup accept use calorimeter ignore use glass beaker unless cup is inside it ignore different type of cup	
	add a stirrer (1)		
	use a more sensitive thermometer (1)	accept use digital / electric thermometer / data logger	
	ensure heater fully submerged (1)		

Q2.

Question number	Answer	Additional guidance	Mark
(i)	two from: lagging (1) lid (1) repeat and average (1) surround heater/thermometer with oil (1)	 repeat with different time/temp rise/power Allow to reach maximum temperature at switch off.	(2)

Question number	Answer	Additional guidance	Mark
(ii)	temperature rise = 34 (°C) (1) substitution (1) $\frac{50 \times 300}{0.92 \times 34}$ evaluation (1) 480 (J/kg°C)	 ecf temperature rise award full marks for correct answer without working	(3)

Q3.

Question number	Answer	Additional guidance	Mark
i	(headings to the table should have) **units** or **names** (1)	accept any correct unit suggestion e.g. cm^3 / Pascals or any correct name e.g. pressure / volume	**(1)** **AO3**

Question number	Answer	Additional guidance	Mark
ii	attempts to find any 'in between number' (interpolates) (1) evaluation (1) 17.2, 17.3 or 17.25	accept any number between 16.6 and 17.9 award full marks for correct answer without working	**(2)** **AO3**

Question number	Answer	Additional guidance	Mark
iii	Suggestions, including any **two** from: take intervening pressure reading(s) (1) give (plenty of) time between readings (1) use apparatus with smaller scale divisions (1) take repeat readings and average (1) make sure temperature stays constant (1)	 e.g. steps of 0.2 cm^3 on volume scale allow repeat to check for anomaly e.g. check temperature of the room ignore any ideas of extending the investigation	**(2) AO3**

Question number	Answer	Additional guidance	Mark
iv	An explanation including any **three** from: any reference to data from the table (1) (the product) p x V remains constant (1) for most readings p x V is similar / close to 2800 (1) which points to $p_1 \times V_1 = p_2 \times V_2$ (1) OR equation doesn't fit because values are different (mp4 dependent upon mp2 / mp3) last value(s) of p x V discordant compared with the others (1)	 e.g. no, because almost all the (pV) values are different agrees / disagrees with hypothesis last value(s) values of pV don't agree	**(3) AO3**

Q4.

Question number	Answer	Additional guidance	Mark
(i)	rearrangement (and substitution) (1) (c) $= \frac{1050}{0.058 \times 78}$ evaluation (1) 230 (J/kg °C)	$c = \frac{\Delta Q}{m \times \Delta\theta}$ award 1 mark if 78 seen accept 232(J/kg °C) award full marks for correct answer without working.	**(2)**

Question number	Answer	Additional guidance	Mark
(ii)	any two of the following	ignore more accurate measurements e.g. thermometer, balance etc. ignore taking repeats	(2)
	reduce heat loss from water/insulate beaker/add cover (1)		
	make the temperature rise larger/use a larger piece of copper/ use a smaller amount of water (1)	start with colder water	
	(use)a stirrer (1)		
	account for heat gained by glass beaker (1)		
	transfer the hot copper faster (1)		
	use a different heating method (1)		
	measure the temperature of the boiling water (1)		

Q5.

Question Number	Answer	Additional guidance	Mark
(i)	substitution (1) (ΔQ =) 0.96 x 920 x 17 evaluation (1) 15000 (J)	0.96 x 920 x (35-18) accept 15014 (.4) 15000 to any other power of ten scores 1 mark award full marks for the correct answer without working	**(2)** **AO2.1**

Question Number	Answer	Additional guidance	Mark
(ii)	add insulation (around aluminium block) (1)	accept any named insulator allow polish aluminium block allow wrap in foil or put in a box ignore 'lids' unless with a (named) insulator	**(1)** **AO3b**

Question Number	Answer	Additional guidance	Mark
(iii)	any **one** from: energy needs (time) to transfer (through the aluminium) (1) heater and thermometer are not close together (1) there is a gap between the thermometer and the block (1)	accept heat for energy accept travel/conduct/spread for transfer	**(1)** **AO1.1**

Q6.

Question Number	Answer	Additional guidance	Mark
(i)	substitution (1) $(V_2 =) \frac{15 \times 2.3}{0.35}$ evaluation (1) 99 (litres)	 accept any value rounding to 99 99 to any other power of ten scores 1 mark award full marks for the correct answer with no working accept alternative method to calculate a different variable e.g. substitution (1) $P_2 = \frac{15 \times 2.3}{100}$ Evaluation (1) $(P_2 =)$ 0.345	**(2)** **AO2.1**

Question Number	Answer	Additional guidance	Mark
(ii)	evaluation (1) $\left(\frac{100}{6}\right) = 16.7\ (mins)$	 accept any value between 16 and 17 (mins) award the mark for the correct answer with no working	**(1)** **AO2.1**

Question Number	Answer	Additional guidance	Mark
(iii)	any **one** from: reduce the amount of oxygen per minute / flow rate (to patient) (1) use a larger (capacity) cylinder (1) use a new cylinder when this one is empty (1)	 must relate to time or rate for this marking point accept reduce the pressure (of oxygen released) accept use hospital mains supply (of oxygen) accept use multiple cylinders	**(1)** **AO2.2**

Q7.

Question number	Indicative content	Mark
*	Answers will be credited according to candidate's deployment of knowledge and understanding of the material in relation to the qualities and skills outlined in the generic mark scheme. The indicative content below is not prescriptive and candidates are not required to include all the material which is indicated as relevant. Additional content included in the response must be scientific and relevant. Fibre glass • has lower R-value • similar R-value (to polystyrene) • derived from sand so plentiful / cheap • non-flammable • dangerous to install • concludes / uses other arguments to say that it is a suitable or unsuitable material	**(6)** **AO2, AO3**

	Polystyrene • high(est) R-value so suitable on that score • (but) involves petroleum / oil extraction so (could be) environmentally damaging • melting / flammable / fire hazard / release of toxic fumes • concludes / uses other arguments to say that it is a suitable or unsuitable material	

Level	Mark	Descriptor
	0	• No awardable content
Level 1	1–2	• Interpretation and evaluation of the information attempted but will be limited with a focus on mainly just one variable. Demonstrates limited synthesis of understanding. (AO3) • The explanation attempts to link and apply knowledge and understanding of scientific ideas, flawed or simplistic connections made between elements in the context of the question. (AO2)
Level 2	3–4	• Interpretation and evaluation of the information on both variables, synthesising mostly relevant understanding. (AO3) • The explanation is mostly supported through linkage and application of knowledge and understanding of scientific ideas, some logical connections made between elements in the context of the question. (AO2)
Level 3	5–6	• Interpretation and evaluation of the information, demonstrating throughout the skills of synthesising relevant understanding. (AO3) • The explanation is supported throughout by linkage and application of knowledge and understanding of scientific ideas, logical connections made between elements in the context of the question. (AO2)

Level	Mark	Additional Guidance	General additional guidance – the decision within levels e.g. - At each level, as well as content, the scientific coherency of what is stated will help place the answer at the top, or the bottom, of that level.
	0	No rewardable material.	
Level 1	1–2	Additional guidance at least two pieces of information from the table used OR one piece of information on the table and makes a simple choice	Possible candidate responses R is 4.0 for polystyrene + fibreglass is not flammable OR we should use fibreglass

Level 2	3–4	Additional guidance compares at least two properties OR compares one property and gives a conclusion about suitability uses information from the two materials used AND makes some comparison(s) / concludes logically about suitability	Possible candidate responses fibreglass has a lower R-value and is not flammable, but polystyrene is OR fibreglass is not flammable, but polystyrene is, so fibreglass better
Level 3	5–6	Additional guidance compares at least two properties AND gives a conclusion (both materials involved, allow one to be discussed in greater detail than the other) WITH logical connections between elements argued from the table.	Possible candidate responses fibreglass and polystyrene have similar R-values. Fibreglass is not flammable, but polystyrene is, so fibreglass is better

Q8.

Question Number	Answer	Additional guidance	Mark
(i)	29(g)		**(1)**

Question Number	Answer	Additional guidance	Mark
(ii)	25(cm^3)		**(1)**

Question Number	Answer	Mark
(iii)	**D** density = $\frac{\text{mass}}{\text{volume}}$ **D** is the only correct answer **A** is incorrect because the equation density =mass**+** volume is incorrect **B** is incorrect because the equation density =mass – volume is incorrect **C** is incorrect because the equation density =mass x volume is incorrect	**(1)**

Question Number	Answer	Additional guidance	Mark
(iv)	Any two improvements from:		(2)
	use balance that reads to one or more decimal places/more decimal places (1)	Accept use more accurate/precise balance in this context	
	use tare/zero balance for first measurement (1)	Allow reset for tare	
	use measuring cylinder with smaller divisions (1)	Allow more accurate/ different scale / different divisions / thinner measuring cylinder	
	use larger volume of liquid (1)	Allow use more liquid / larger mass of liquid	
	repeat <u>and</u> average (1)		
	read measuring cylinder at eye level (1)	Allow avoid parallax error / read from bottom of meniscus	

Q9.

Question number	Answer	Additional guidance	Mark
(i)	933 (K) (1)	do not accept -933	(1) AO2

Question number	Answer	Additional guidance	Mark
(ii)	A description to include any **two** from: (motion is) random (1) various {speeds / velocities / kinetic energies} (1) bump into each other / collide (1)	 move freely / move in any direction / move around different speeds range of speeds slide over / past each other / touch each other / in contact with each other	**(2)** **AO1**

	fast(er than solid) (1)	more kinetic energy (than in solid) ignore bulk properties of liquids e.g. take shape of container. ignore vibrate "random speeds" on its own scores 1 mark	

Q10.

Question	Answer	Additional guidance	Mark
	substitution into $Q = m \times L$ (1) (Q =) 60 ($\times 10^{-3}$)$\times$ 2.26 ($\times 10^{6}$) evaluation (1) 1.36×10^{5} (J)	 136 000 (J) 135 600 (J) accept numbers that round to 1.4×10^{5} (J) award full marks for the correct answer without working any answer rounding to 1.4 to any other power of 10 scores 1 mark	**(2)** **AO2.1**