Questions

Q1.

A student needs to determine the specific heat capacity of water.

Figure 22 shows some of the equipment the student uses.

Figure 22

Describe the method the student should use to determine the specific heat capacity of water.

Your description should include, with reasons,

- any other equipment needed
- the measurements needed.

You may draw a diagram if it helps your answer.

(6)

(Total for question = 6 marks)

Q2.

A student is investigating the melting of ice.

The student has some crushed ice in a beaker at a temperature of −20 °C.

The student heats the beaker and its contents for 20 minutes.

Figure 24 is a graph of the student's results.

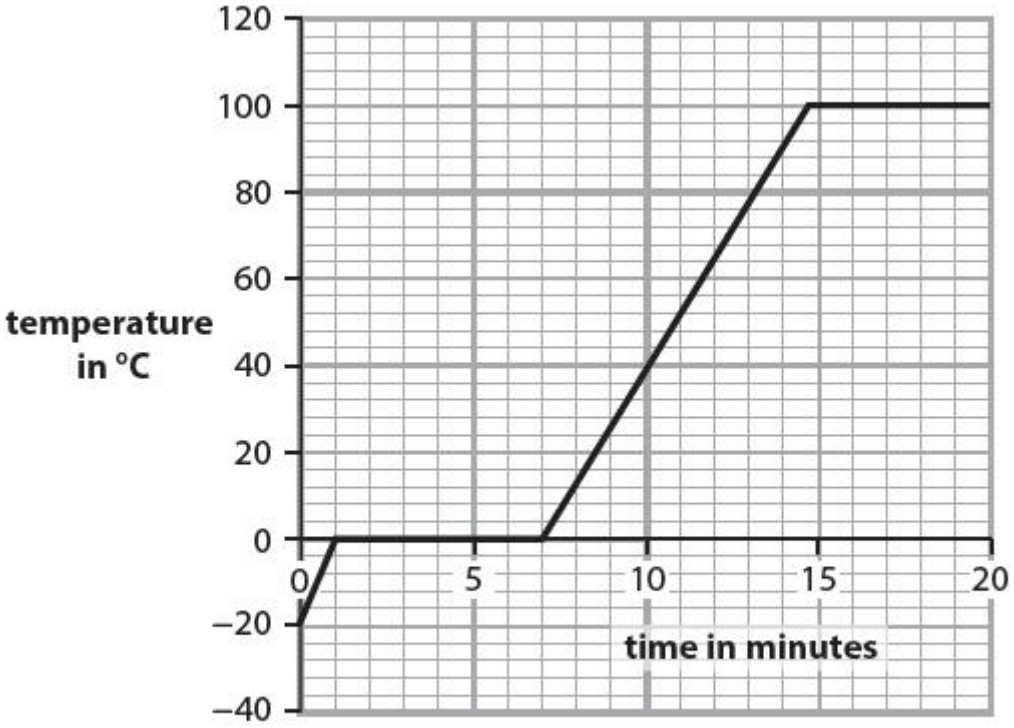

Figure 24

Using information from the graph, describe the changes that take place in the 20 minutes shown on the graph.

Your answer should refer to

- data from the graph
- the state (solid, liquid or gas) of the contents of the beaker.

(6)

.....

.....

.....

.....

.....

.....

.....

.....

.....

.....

.....

.....

(Total for question = 6 marks)

Q3.

A student is asked to find the density of a metal key.

Figure 8 shows a metal key and some apparatus.

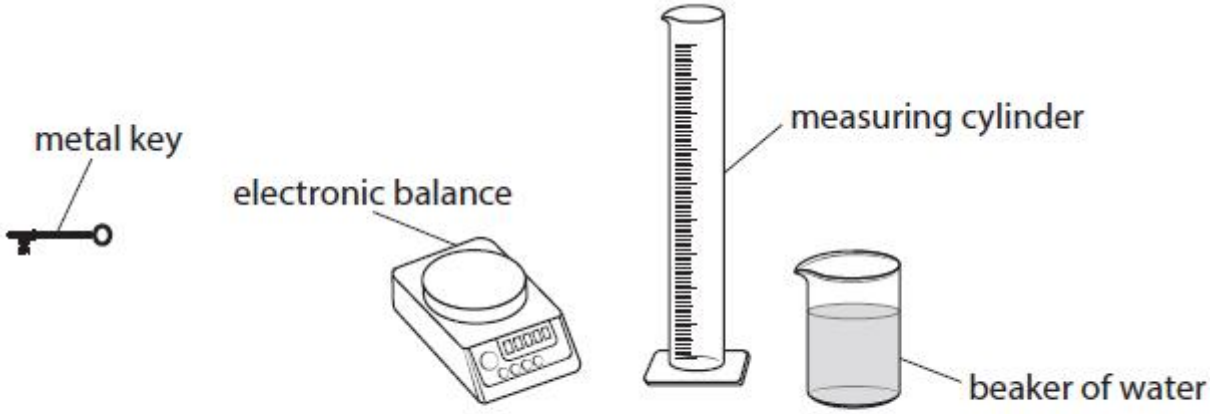

Figure 8

Using the apparatus shown in Figure 8, describe how the student can find the density of the metal key.

$$\text{density} = \frac{\text{mass}}{\text{volume}}$$

(4)

.....

.....

.....

.....

.....

.....

.....

.....

.....

(Total for question = 4 marks)

Q4.

Describe, in terms of particles, **two** differences between a solid and a liquid of the same substance.

(2)

1 .....

.....

2 .....

.....

(Total for question = 2 marks)

Q5.

(i) Figure 18 shows a cylinder containing some gas.

Figure 18

The cylinder of gas warms up and the temperature of the gas increases.
Complete the following sentence to describe what happens as the gas warms up.

(1)

Thermal energy transfers to ..... energy of the gas particles.

(ii) Figure 19a shows a container of gas.

The gas has a pressure of P_1 and volume V_1.
Figure 19b shows the same container after the gas has been compressed.
The pressure is now P_2 and the volume is V_2.
The temperature of the gas does not change.

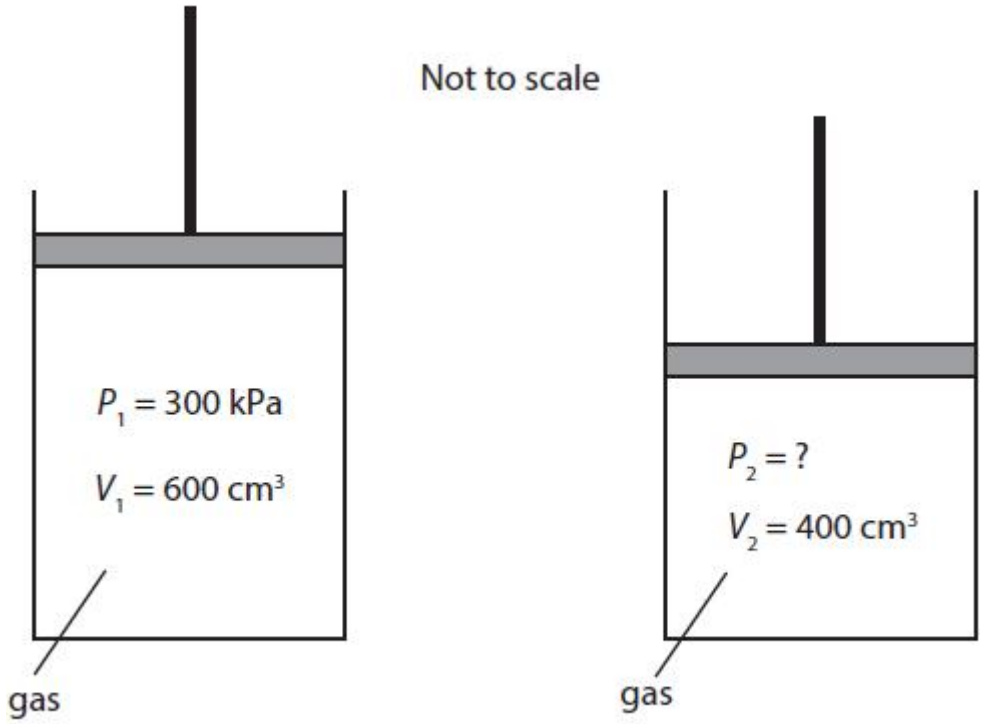

Figure 19a **Figure 19b**

Use data from Figure 19a and Figure 19b to calculate the pressure P_2 of the gas in Figure 19b.
Use the equation

$$P_2 = \frac{P_1 \times V_1}{V_2}$$

(2)

P_2 = ... kPa

(Total for question = 3 marks)

Q6.

A digital thermometer gives a temperature reading of 23 °C.

Calculate the value of this temperature in kelvin.

(1)

.....

.....

(Total for question = 1 mark)

Q7.

A coil of copper wire has a mass of 14.1 g.

The density, ρ, of copper is 8.96 g/cm^3.

Calculate the volume of the copper wire.

$$\rho = \frac{m}{V}$$

(3)

volume ..... cm^3

(Total for question = 3 marks)

Q8.

The volume of 380 g of ice is 410 cm^3.

Calculate the density of the ice in g/cm^3.

(2)

density = ... g/cm^3

(Total for question = 2 marks)

Q9.

Another student decides to melt some ice.

The student melts 380 g of ice at 0 °C.

The specific latent heat of fusion of ice is 3.34×10^5 J/kg.

Calculate the thermal energy needed to melt the ice.

Select an equation from the list of equations at the end of this paper.

(2)

thermal energy needed = ... J

(Total for question = 2 marks)

Q10.

Figure 11 is a graph that shows how the volume of a fixed mass of gas changes with pressure.

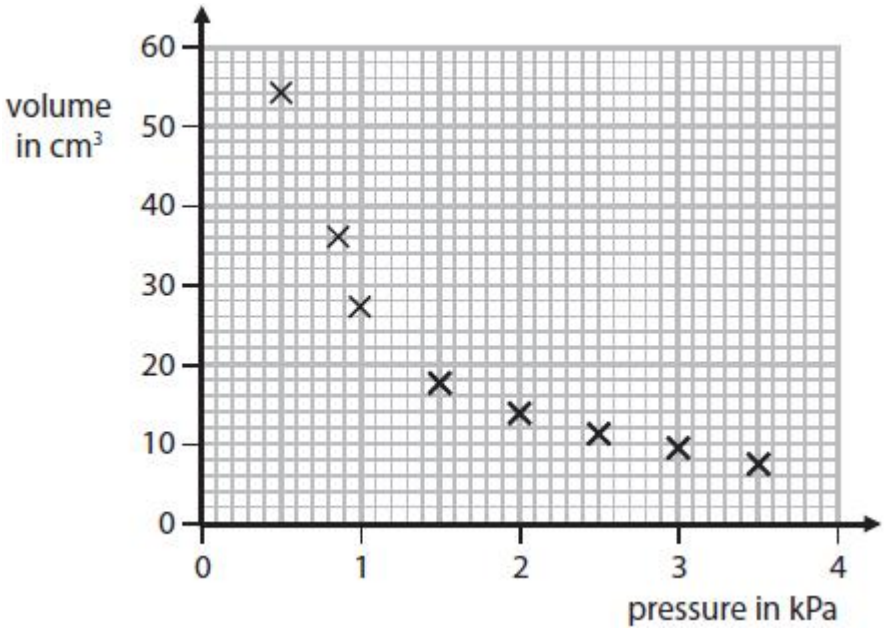

Figure 11

(i) Draw the curve of best fit through the points on the graph.

(1)

(ii) A student makes this statement about the graph in Figure 11.

"When the pressure is doubled, the volume halves".
Use data from the graph to show whether this statement is correct.

(3)

.....

.....

.....

.....

.....

.....

(Total for question = 4 marks)

Mark Scheme

Q1.

Question number	Indicative content	Mark
*	Answers will be credited according to candidate's deployment of knowledge and understanding of the material in relation to the qualities and skills outlined in the generic mark scheme. The indicative content below is not prescriptive and candidates are not required to include all the material which is indicated as relevant. Additional content included in the response must be scientific and relevant. Equipment • Thermometer • Measuring cylinder / balance • Power supply • Stirrer • Joule meter / ammeter / voltmeter • Stopwatch / clock Measurements • Mass / volume of water • Initial / final / change of temperature of water • Voltage / current / energy / power • Time (heated for) Detail • Lid/insulation to reduce energy loss • Ensure heater fully immersed / keep stirring the water • Use of equation $\Delta Q = m \times c \times \Delta\theta$ / calculation of input energy • Repeat and find average • Plot graph of temp change and time / energy Credit can be given for correctly labelled diagrams	**(6)** **AO1**

Level	Mark	Descriptor
	0	• No rewardable material.
Level 1	1-2	• Demonstrates elements of physics understanding, some of which is inaccurate. Understanding of scientific, enquiry, techniques and procedures lacks detail. (AO1) • Presents a description which is not logically ordered and with significant gaps. (AO1)
Level 2	3-4	• Demonstrates physics understanding, which is mostly relevant but may include some inaccuracies. Understanding of scientific ideas, enquiry, techniques and procedures is not fully detailed and/or developed. (AO1) • Presents a description of the procedure that has a structure which is mostly clear, coherent and logical with minor steps missing. (AO1)
Level 3	5-6	• Demonstrates accurate and relevant physics understanding throughout. Understanding of the scientific ideas, enquiry, techniques and procedures is detailed and fully developed. (AO1) • Presents a description that has a well-developed structure which is clear, coherent and logical. (AO1)

Level	Mark	Additional Guidance	General additional guidance – the decision within levels e.g. - At each level, as well as content, the scientific coherency of what is stated will help place the answer at the top, or the bottom, of that level.
	0	No rewardable material.	
Level 1	1–2	Additional guidance one measurement **or** two items of equipment **or** one piece of detail	Possible candidate responses measure the temperature of the water to start with **or** the student needs a power supply and a thermometer **or** insulated material around the beaker
Level 2	3–4	Additional guidance two items of equipment and at least one measurement **or** one piece of equipment and two measurements **or** two items of equipment and one piece of detail **or** one measurement and one piece of detail	Possible candidate responses The student needs a measuring cylinder to measure the volume of water. They also need a thermometer **Or** Measure the temperature rise of the water and use a balance to measure the mass **or** They need a power supply for the heater and a voltmeter. Keep the heater in the water. **or** Measure temperature rise of the water. Keep stirring the water all the time.
Level 3	5–6	Additional guidance two items of equipment and two measurements and one piece of detail.	Possible candidate responses The student needs a balance to find the mass of water. They also need a thermometer to measure the rise in temperature of the water. Then use the equation $\Delta Q = m \times c \times \Delta\theta$

Q2.

Question	Indicative content	Mark
	Answers will be credited according to candidate's deployment of knowledge and understanding of the material in relation to the qualities and skills outlined in the generic mark scheme. The indicative content below is not prescriptive and candidates are not required to include all the material which is indicated as relevant. Additional content included in the response must be scientific and relevant. AO1 • ice melts at 0 °C • water boils at 100 °C • 0 to 1 minute temperature of ice rising • 1 to 7 minutes ice melting • 1 to 7 minutes energy supplied is used to increase (potential) energy of ice particles • 1 to 7 minutes energy supplied is used to break bonds (between ice particles) • 7 to about 15 minutes temperature of water rising • 7 to about 15 minutes energy supplied is used to increase (kinetic) energy of water particles • about 15 to 20 minutes water boiling • about 15 to 20 minutes energy supplied is used to break bonds (between water particles)	**(6)** **AO1.2**

Level	Mark	Descriptor
	0	• No rewardable material.
Level 1	1-2	• Demonstrates elements of physics understanding, some of which is inaccurate. Understanding of scientific, enquiry, techniques and procedures lacks detail. (AO1) • Presents a description which is not logically ordered and with significant gaps. (AO1)
Level 2	3-4	• Demonstrates physics understanding, which is mostly relevant but may include some inaccuracies. Understanding of scientific ideas, enquiry, techniques and procedures is not fully detailed and/or developed. (AO1) • Presents a description of the procedure that has a structure which is mostly clear, coherent and logical with minor steps missing. (AO1)
Level 3	5-6	• Demonstrates accurate and relevant physics understanding throughout. Understanding of the scientific ideas, enquiry, techniques and procedures is detailed and fully developed. (AO1) • Presents a description that has a well-developed structure which is clear, coherent and logical. (AO1)

Level	Mark	Additional Guidance	General additional guidance – the decision within levels e.g. - At each level, as well as content, the scientific coherency of what is stated will help place the answer at the top, or the bottom, of that level.
	0	No rewardable material	
Level 1	1–2	Additional guidance limited description including isolated facts for any section	Possible candidate responses temperature of ice/solid increases OR ice melts OR water boils
Level 2	3–4	Additional guidance limited description relating knowledge and understanding to interpretation of graph in **one** section plus an isolated fact	Possible candidate responses temperature of ice/solid increases for 1 minute AND temperature of the water increases
Level 3	5–6	Additional guidance detailed description relating knowledge and understanding to interpretation of graph in **two** sections plus an isolated fact	Possible candidate responses temperature of ice/solid increases for 1 minute AND ice melting while 0 °C for 6 minutes AND water boils

Q3.

Question Number	Answer	Additional guidance	Mark
	a description including: use the **balance** to find the **mass** of the key (1) (add water and) measure (initial) volume / level of water using the (measuring) cylinder (1) place the key in the measuring cylinder (1) subtract the (two) volumes (to give the volume of the key) (1)	 accept weigh the key using the **balance** allow scales for balance ignore weight accept fill measuring cylinder to a named volume e.g. 100ml accept find the increase/ difference in volume / level of water allow alternative method: use the **balance** to find the **mass** of the key (1) **fill** beaker/eureka can (to the top) with water (1) place key in beaker/eureka can and catch overflow (in measuring cylinder) (1) measure volume / level of water using the (measuring) cylinder (1)	**(4)** **AO1.2**

Q4.

Question number	Answer	Additional guidance	Mark
	descriptions to include any **two** of • particles / atoms in solid close(r) together (1) • particles / atoms in solid (vibrate) in fixed positions but particles in liquid move (freely) (1) • particles in a solid in regular arrangement but particles in liquid are randomly arranged (1) • particles in a liquid have more (kinetic) energy (than in a solid) (1)	reverse argument difference asked for, so **must compare** for subsequent marking points allow answers in terms of forces between particles	**(2)** **AO1**

Q5.

Question	Answer	Additional guidance	Mark
(i)	kinetic (1)	movement / internal reject mechanical / potential / elastic	**(1)** **AO1.1**

Question	Answer	Additional guidance	Mark
(ii)	substitution (1) (P_2 =) $\frac{300 \times 600}{400}$ evaluation (1) (P_2 =) 450 (kPa)	 allow values to 1sf e.g. 400 or 500 allow one mark for 400 OR 450 OR 500 to any other power of ten award full marks for the correct answer without working	**(2)** **AO2.1**

Q6.

Question Number	Answer	Additional guidance	Mark
	296 (°C)	accept 23 + 273	**(1)**

Q7.

Question	Answer	Additional guidance	Mark
		allow substitution and rearrangement in either order	**(3) AO2.1**
	substitution (1)		
	$8.96 = \frac{14.1}{V}$	allow substitution of correct values into a visible, incorrectly rearranged algebraic equation for this mark only	
	rearrangement (1)		
	$(V =) \frac{14.1}{8.96}$	$(V =) \frac{m}{\rho}$	
	evaluation (1)		
	$(V =) 1.57\ (cm^3)$	accept numbers that round to 1.57 allow 1.6	

		award full marks for the correct answer without working allow 1.6 or answers rounding to 1.57 to any other power of 10 scores 2 marks	

Q8.

Question Number:	Answer	Additional guidance	Mark
	recall and substitution (1) (density ρ)=$\frac{380}{410}$ evaluation (1) 0.93 (g/cm^3)	 allow substitution of a mass / a volume accept any value that rounds to 0.9 allow truncated 0.92 (g/cm^3) only accept 1(g/cm^3) if working shown. award full marks for correct answer without working	**(2)** AO 2 1

Q9.

Question Number:	Answer	Additional guidance	Mark
	substitution (1) (Q =) $\frac{380 \times 3.34\ (\times 10^5)}{(1000)}$ evaluation (1) 1.27 x 10^5 (J)	 127 kJ 126920 (J) accept answers that round to 1.27 x 10^5 e.g. 1.2692 x 10^5 accept 130 kJ or 1.3 x 10^5 (J) POT error max. 1 mark award full marks for correct answer without working	**(2)** AO 2 1

Q10.

Question number	Answer	Additional guidance	Mark
(i)	curve of best fit through all points	reject joining point to point with straight lines reject curves with excessive 'tramlining'	(1)

Question number	Answer	Mark
(ii)	An explanation that combines identification via a judgment (1 mark) to reach a conclusion via justification/reasoning (2 marks): select a pair of P values from the curve such that one value is double the other (1) analyse the corresponding V values (1) correct conclusion based on their curve (1)	(3)