Questions

Q1.

X-rays and radio waves are part of the electromagnetic spectrum and have different uses.

These radiations are produced in different ways.

X-rays are emitted when electrons within an atom go through energy changes.

Radiowaves are produced by electrons in circuits.

Compare X-rays with radio waves.

Your answer should refer to

- the uses of both types of radiation
- the different ways that electrons are involved in producing X-rays and radio waves. **(6)**

.....

.....

.....

.....

.....

.....

.....

.....

.....

.....

.....

.....

(Total for question = 6 marks)

Q2.

A student investigates how light is reflected from a plane mirror.

Figure 4 shows part of the student's investigation.

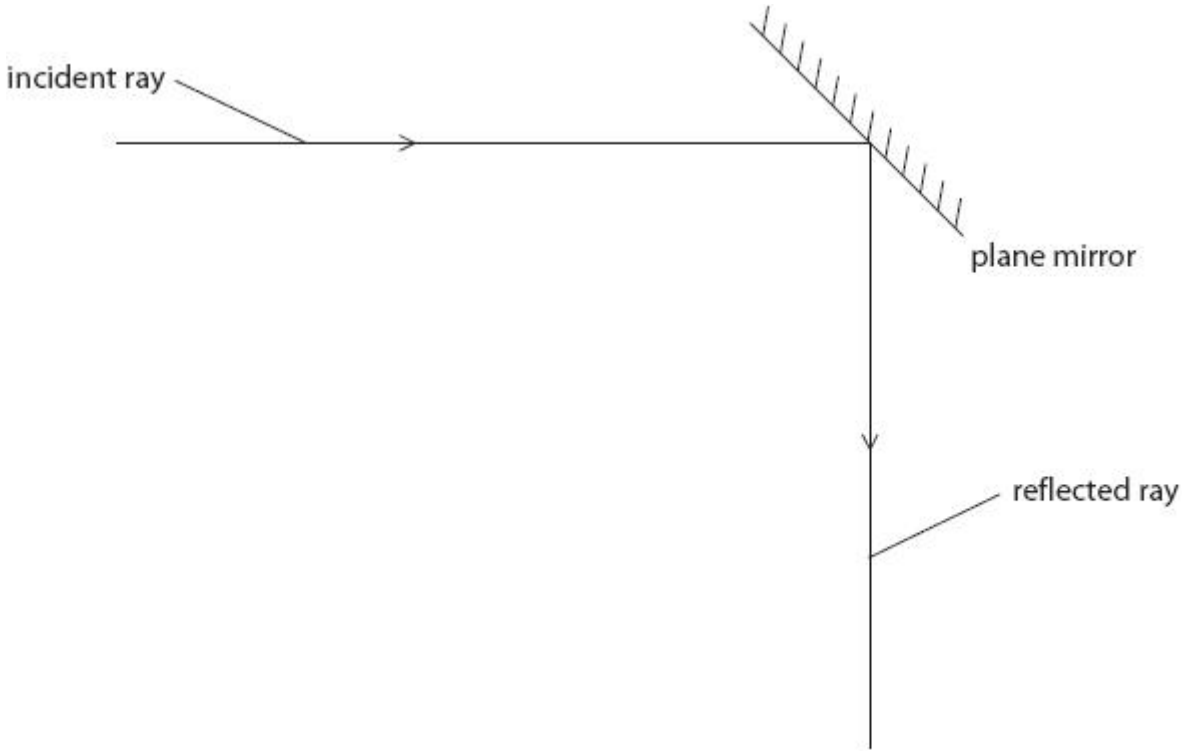

Figure 4

(i) Complete the diagram to show

- the normal
- the angle of incidence (*i*) and the angle of reflection (*r*).

(2)

(ii) Figure 5 shows a ray of light travelling through a 45°-glass prism.

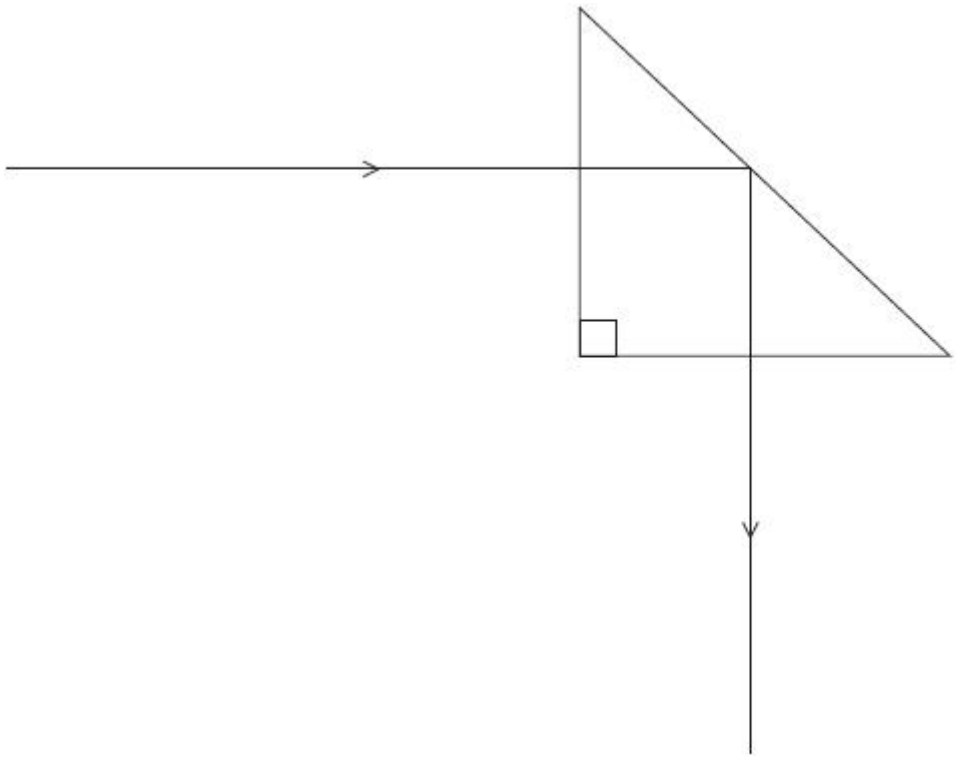

Figure 5

State what can be deduced from this diagram about the value of the critical angle for glass.

(1)

.....

.....

(iii) Give a reason why high quality optical instruments use prisms instead of mirrors to reflect light.

(2)

.....

.....

.....

.....

(Total for question = 5 marks)

Q3.

(a) The diagram shows a ray of light incident on a boundary between air and glass.

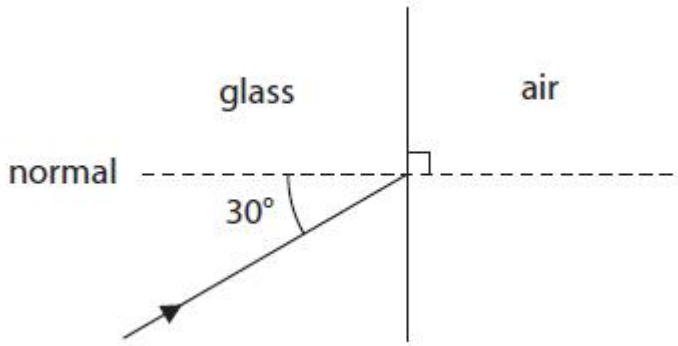

The critical angle for glass in air is 42°.
Which of these diagrams shows the ray of light after it meets the boundary between glass and air?
Put a cross (☒) in the box next to your answer.

(1)

☒ **A**

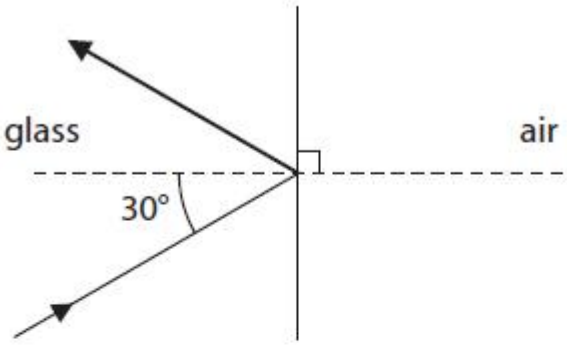

☒ **B**

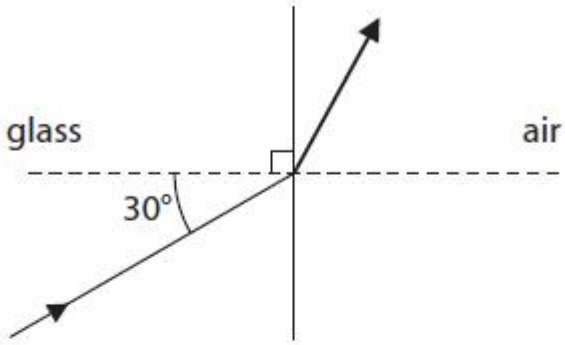

☒ **C**

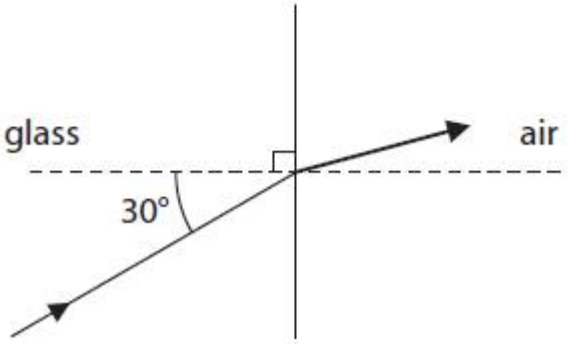

☒ **D**

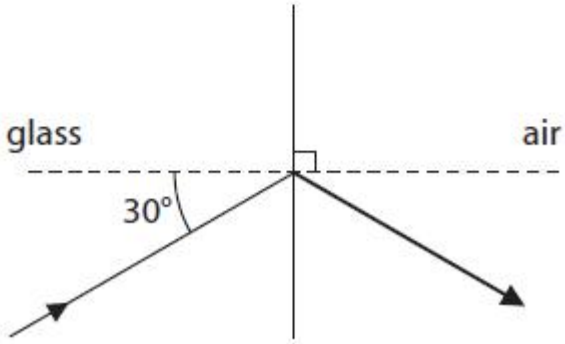

(b) The diagram shows how an endoscope is used to see inside a person's stomach.
Light is shone into the optical fibres in the endoscope at A and it comes out at B.

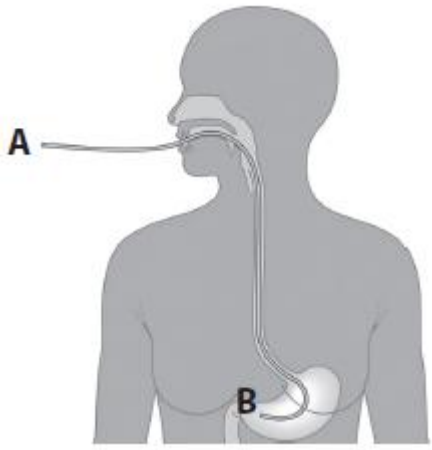

(i) The cross-sectional area of an optical fibre is 6.3×10^{-6} m^2.
The intensity of the light entering the optical fibre is 3.2×10^{7} W/m^2.
Calculate the power of the light entering the optical fibre.

(3)

power = ... W

(ii) Explain why the power of the light at B is the same as the power of the light at A.

(2)

.....

.....

.....

.....

(c) The optical fibre cable in an endoscope has a refractive index of 1.70.

The critical angle for a material can be calculated using the equation

$$\sin c = 1/n$$

where c is the critical angle
and n is the refractive index
The graph shows the relationship between an angle and the sine of the angle.

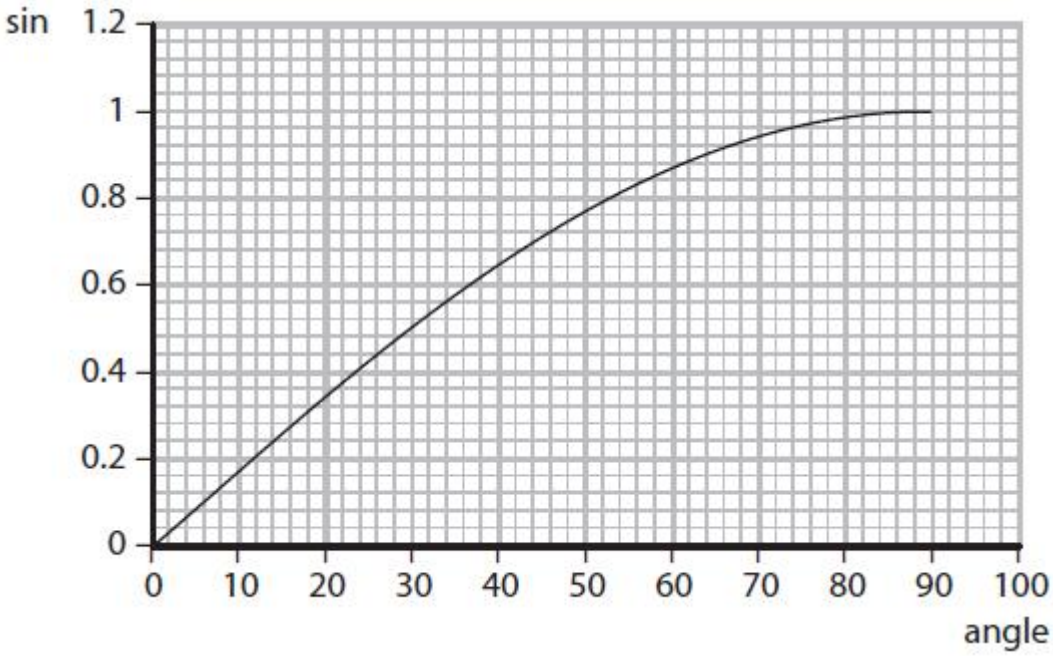

Use the equation and the graph to calculate the critical angle for the optical fibre.

(2)

critical angle = ... °

(Total for Question = 8 marks)

Q4.

Figure 3 shows an image taken at night using a camera that is sensitive to infrared radiation.

Figure 3

Radiation with shorter wavelengths shows as brighter areas in this image.

Explain why the people can be seen against the background in this image.

(2)

.....

.....

.....

.....

(Total for question = 2 marks)

Q5.

A student looks through a blue filter at a green leaf on a white background.

Describe the colours that the student sees.

(2)

.....

.....

.....

.....

(Total for question = 2 marks)

Q6.

Light is one example of an electromagnetic wave.

Light can transfer energy from a lamp to the leaf of a plant, causing chemical reactions in the leaf.

Describe examples of **two** other electromagnetic waves transferring energy.

(4)

1 .....

.....

.....

.....

2 .....

.....

.....

.....

(Total for question = 4 marks)

Q7.

* Sulfates and black soot are particles formed by industrial processes.

Some of these particles are found in the atmosphere over the Arctic Ocean.

The sulfates stay in the atmosphere and reflect (scatter) sunlight.

The black soot falls onto the Arctic ice.

Discuss how a reduction in these industrial processes is likely to affect the temperature of the atmosphere.

(6)

.....

.....

.....

.....

.....

.....

.....

.....

.....

.....

.....

.....

(Total for question = 6 marks)

Q8.

Ultraviolet waves cover a range of frequencies.

Scientists divide this range into three types, UVA, UVB and UVC.

The table in Figure 14 shows the frequency range for each type.

type	frequency range in Hz
UVA	7.5×10^{14} to 9.4×10^{14}
UVB	9.4×10^{14} to 10×10^{14}
UVC	10×10^{14} to 30×10^{14}

Figure 14

Figure 15 is a diagram about the effect that the Earth's atmosphere has on three types of ultraviolet radiation.

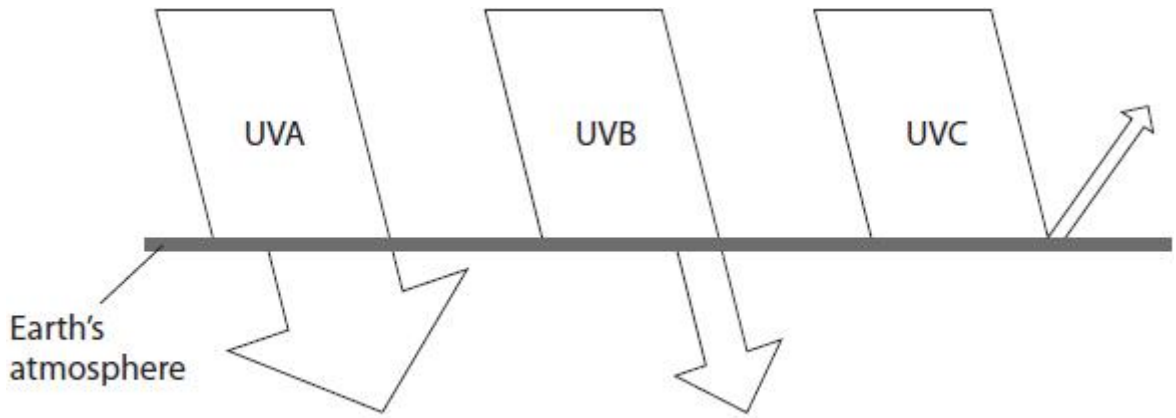

Figure 15

Describe how the effects change with **wavelength**, using information from Figure 14 and Figure 15.

The width of the arrows drawn indicates the amount of radiation that is involved.

Calculations are **not** required.

(4)

.....

.....

.....

.....

.....

.....

.....

.....

(Total for question = 4 marks)

Q9.

Describe how the power of a lens is related to its focal length and the shape of the lens.

(2)

.....

.....

.....

.....

.....

(Total for question = 2 marks)

Q10.

When light travels from air into glass, it is refracted.

To investigate this, a student has a rectangular glass block and a ray box.

The ray box produces a ray of light.

Describe how the student should use the glass block and ray box to produce a refracted ray and mark its position.

You may draw a diagram to help your answer.

(4)

.....

.....

.....

.....

.....

.....

.....

.....

.....

.....

(Total for question = 4 marks)

Mark Scheme

Q1.

Question number	Indicative content	Mark
	Answers will be credited according to candidate's deployment of knowledge and understanding of the material in relation to the qualities and skills outlined in the generic mark scheme. The indicative content below is not prescriptive, and candidates are not required to include all the material which is indicated as relevant. Additional content included in the response must be scientific and relevant. AO1 **Comparison** X–rays: high frequency / short wavelength / ionising / high energy Radio waves: low frequency / long wavelength / not ionising / low energy **X ray are used** • in medical diagnosis, to find broken bones, damage to lungs • radiotherapy • treatment of cancer • airport security • revealing counterfeit art **X-rays are emitted when electrons change energy levels because** • electrons in lower energy levels can absorb energy • the electrons move to higher energy levels • when the electrons return to a lower energy level • the electrons lose energy as radiation. • the electrons need to lose a large amount of energy • (so that) they emit x-ray radiation of high energy/frequency	**(6)** **AO1**

	Radio waves are used • broadcasting television • broadcasting radio • communications • satellite transmissions • mobile phones • radar	
	Radio-waves are emitted when • electrons oscillate in electrical circuits **oscillations are** • current (flow of electrons) that continually change direction • current flows up and down in a (transmitting) aerial • alternating current (AC) • this generates radio waves in the air around the aerial • the frequency of the radio waves corresponds to the oscillation frequency **N.B. No credit is given for:** **Electrons within an atom go through energy changes** **OR** **Radio waves are produced in electrons in circuits** **These phrases are in the stem of the question**	

Level	Mark	Descriptor
	0	No rewardable material.
Level 1	1–2	Demonstrates elements of physics understanding, some of which is inaccurate. Understanding of scientific, enquiry, techniques and procedures lacks detail. (AO1) Presents a description which is not logically ordered and with significant gaps. (AO1)
Level 2	3–4	Demonstrates physics understanding, which is mostly relevant but may include some inaccuracies. Understanding of scientific ideas, enquiry, techniques and procedures is not fully detailed and/or developed. (AO1) Presents a description of the procedure that has a structure which is mostly clear, coherent and logical with minor steps missing. (AO1)
Level 3	5–6	Demonstrates accurate and relevant physics understanding throughout. Understanding of the scientific ideas, enquiry, techniques and procedures is detailed and fully developed. (AO1) Presents a description that has a well-developed structure which is clear, coherent and logical. (AO1)

Level	Mark	Additional Guidance	General additional guidance – the decisions within levels
	0	No rewardable material	
Level 1	1-2	Additional guidance Elements of physics present i.e. isolated knowledge of principles, **two** unconnected statements	Possible candidate response any use of X rays any use of radio waves any comparison electrons are around the nucleus a current is electrons (moving) electrons oscillate
Level 2	3-4	Additional guidance Some knowledge of principles with limited detail on use and a comparison or process	Possible candidate response any use of x-rays and of radio waves with limited detail and one of: a comparison or electrons lose energy to emit X-rays or electrons oscillate in circuits
Level 3	5-6	Additional guidance Detailed knowledge of principles on use with logical connections made about one process	Possible candidate response Use of X-rays and of radio waves with detail and one of: electrons lose energy to change to lower energy level and emit energy as X–rays or electrons oscillate in circuit and currents move up and down in aerials to generate radio waves

Q2.

Question number	Answer	Additional guidance	Mark
(i)	• normal drawn correctly (1) • angles of incidence and reflection shown correctly (1)	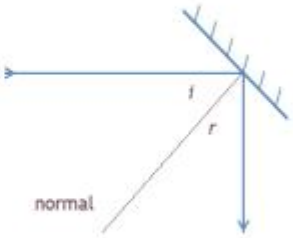	**(2)**

Question number	Answer	Additional guidance	Mark
(ii)	The critical angle must be less than 45° (1)		**(1)**

Question number	Answer	Acceptable answer	Mark
iii)	A reason which links • Total internal reflection in the prism(s) (1) • No light is scattered (1)	No light is lost / no multiple reflections	**(2)**

Q3.

Question Number	Answer	Acceptable answers	Mark
(a)	B 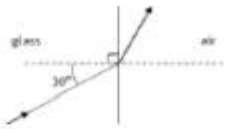		**(1)**

Question Number	Answer	Acceptable answers	Mark
(b)(i)	substitution: (1) 3.2×10^7 = power/6.3×10^{-6} transposition (1) (power) = $3.2 \times 10^7 \times 6.3 \times 10^{-6}$ evaluation: (1) 200 (W)	substitution and transposition in any order ignore powers of 10 until evaluation 202(W) or 201.6(W) or 201(W) full marks for the correct numerical answer without working	**(3)**

Question Number	Answer	Acceptable answers	Mark
(b)(ii)	An explanation linking: EITHER • no light / energy is lost (1) OR • no <u>light</u> is refracted (out) (1) WITH • (because) idea of (total) internal reflection (1)	Ignore references to power No light / energy escapes All <u>light</u> stays in (the fibre) TIR Accept "<u>All light</u> is internally reflected" for 2 marks	**(2)**

Question Number	Answer	Acceptable answers	Mark
(c)	substitute and evaluate (sin c) = 1/1.7 (sin c) = 0.59 (1) from graph or calculation c = any value between 34° and 38° (1)	 0.588, 0.58, 0.6 full marks for the correct numerical answer without working	**(2)**

(Total marks for question = 8 marks)

Q4.

Question number	Answer	Additional guidance	Mark
	An explanation that combines application of knowledge (1 mark) and reasoning (1 mark) linking: • (faces of) people are at a higher temperature than the background (1) • therefore they emit more (infrared) at shorter wavelengths than background (1)	 accept higher frequency / higher intensity	**(2)**

Q5.

Question number	**Answer**	**Mark**
	An answer that provides a description by making reference to: • leaf appears black (1) • background appears blue (1)	**(2)**

Q6.

	Answer	Additional guidance	Mark
	example 1 e-m wave (1) corresponding result of energy transfer (1) example 2 e-m wave (1) corresponding result of energy transfer (1)	e.g. radio waves: communication, oscillations (of electrons) in wires microwaves: cooking, communications and satellite transmissions, internal heating of body cells, increase KE/vibration of water molecules infrared: cooking, thermal imaging, optical fibres, television remote controls, skin burns ultraviolet: security marking, fluorescent lamps, detecting forged bank notes and disinfecting water, damage to surface cells and eyes, skin cancer x-rays: observing the internal structure of objects, airport security scanners and medical x-rays, mutation or damage to cells in the body, cancer gamma rays: including sterilising food and medical equipment, and the detection of cancer and its treatment, mutation or damage to cells in the body, cancer additional effect for visible light scores 1 mark e.g. : including vision, photography and illumination	**(4)** **AO1**

Q7.

Question number	Indicative content	Mark
*	Answers will be credited according to candidate's deployment of knowledge and understanding of the material in relation to the qualities and skills outlined in the generic mark scheme. The indicative content below is not prescriptive and candidates are not required to include all the material which is indicated as relevant. Additional content included in the response must be scientific and relevant. **AO2 (6 marks)** • the soot could make the ice black • black ice will absorb more IR radiation than white ice • black ice might cause an increase in the temperature of the Earth because absorption of IR radiation (can) cause an increase in temperature • reduction in soot might reduce warming because the ice will not be as black/will be more white • shiny sulfates (are good at) reflecting/scattering IR radiation which means less heat absorbed • sulfates scatter the IR and this reduces the amount of IR radiation falling on the Earth • sulfates might cause a decrease in the temperature of the Earth • reduction in sulfates might increase warming	**(6)**

Level	Mark	Descriptor
	0	No rewardable material.
Level 1	1–2	• The discussion attempts to link and apply knowledge and understanding of scientific ideas, flawed or simplistic connections made between elements in the context of the question. (AO2) • Lines of reasoning are unsupported or unclear. (AO2)
Level 2	3–4	• The discussion is mostly supported through linkage and application of knowledge and understanding of scientific ideas, some logical connections made between elements in the context of the question. (AO2) • Lines of reasoning mostly supported through the application of relevant evidence. (AO2)
Level 3	5–6	• The discussion is supported throughout by linkage and application of knowledge and understanding of scientific ideas, logical connections made between elements in the context of the question. (AO2) • Lines of reasoning are supported by sustained application of relevant evidence. (AO2)

Q8.

Question Number	Answer	Additional guidance	Mark
	a description including: UVA **mostly** transmitted OR **some** absorbed (1) UVB **some** transmitted OR **mostly** absorbed (1) UVC **not** transmitted OR **mostly** absorbed OR **some** reflected (1) correct relationship of absorption/ transmission to wavelength / □ (1)	UVA **mostly** travels through accept **less** transmitted than UVA **more** absorbed than UVA or UVB wavelength decreasing (with) absorption increasing OR longer wavelengths transmit more □ abs trans inc dec inc dec inc dec	**(4)**

Q9.

Question number	Answer	Additional guidance	Mark
	a description to include: a more powerful lens has a shorter focal length (1) a more powerful lens has a smaller radius of curvature (1)	 stronger for more powerful allow thicker or fatter or more convex or more concave	**(2)** **AO1.1**

Q10.

	Answer	Additional guidance	Mark
	a description of method to include **four** from: draw around the block (1) shine a ray on the block (1) mark/draw/trace where the ray enters (1) mark/draw/trace where the ray exits (1) join point of entry to point of exit (1)	 point the ray box at the block can credit from drawing with glass block and ray box/light box labelled mark/draw/trace incident ray mark/draw/trace emerging ray allow 'draw light rays' for 1 mark if mp3 and mp4 not scored	**(4)** **AO1.2**