Name: _____

Investigating acceleration

core practical

Date:

Time:

Total marks available: 25

Total marks achieved: _____

KSA Physics

Questions

Q1.

* Newton's second law can be stated as

$$\text{force} = \text{mass} \times \text{acceleration}$$

A student is provided with a trolley and a runway on a bench, as shown in Figure 19, and access to other equipment.

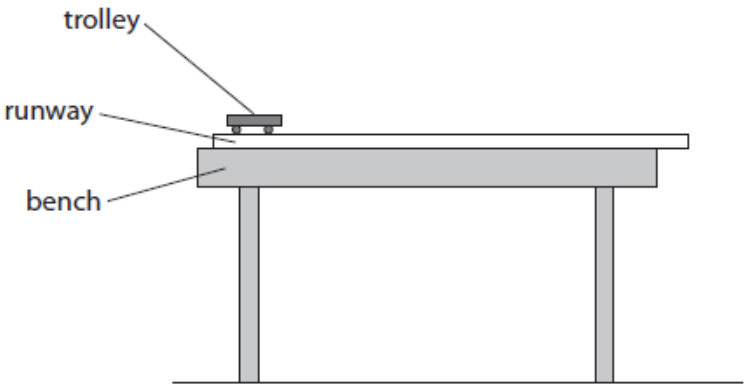

Figure 19

Describe a procedure the student could use to investigate how the acceleration of the trolley depends on the force applied to the trolley.

You may add to the diagram in Figure 19 to help your answer.

(6)

.....

.....

.....

.....

.....

.....

.....

.....

.....

.....

.....

.....

.....

(Total for question = 6 marks)

Q2.

A student has a trolley and a ramp, as shown in Figure 21.

The height, H, of one end of the ramp can be adjusted.

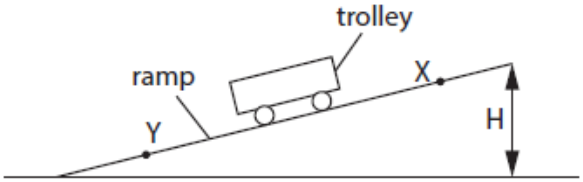

Figure 21

The student investigates how the average speed of the trolley between X and Y depends on the height, H, of the ramp.

Describe

- the additional equipment that the student needs
- how that equipment is used to obtain the measurements needed.

(6)

.....

.....

.....

.....

.....

.....

.....

.....

.....

.....

.....

.....

(Total for question = 6 marks)

Q3.

A student lifts a toy car from a bench and places the toy car at the top of a slope as shown in Figure 16.

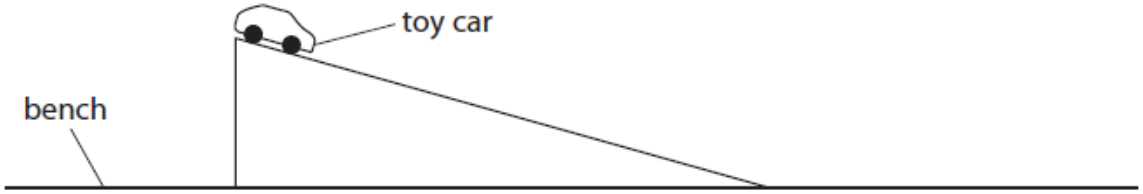

Figure 16

The student lets the toy car roll down the slope.

Describe how the student could find, by experiment, the speed of the toy car at the bottom of the slope.

(4)

.....

.....

.....

.....

.....

.....

(Total for question = 4 marks)

Q4.

Figure 7 shows a skier going down a hill.

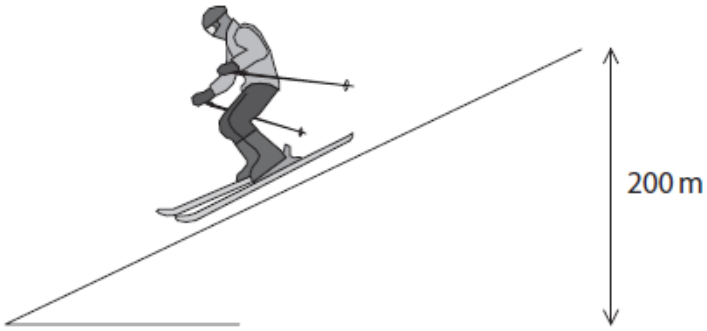

Figure 7

Describe how her speed at the bottom of the slope could be determined.

(3)

.....

.....

.....

.....

.....

.....

(Total for question = 3 marks)

Q5.

A student investigates the relationship between force and acceleration for a trolley on a runway.

Figure 12 shows some of the apparatus the student uses.

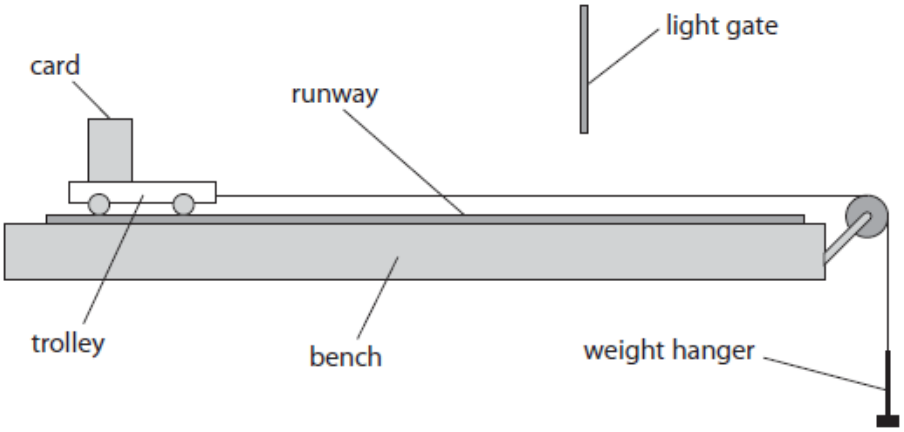

Figure 12

(i) Describe how the student could increase the accelerating force applied to the trolley.

(2)

.....

.....

.....

.....

(ii) Describe how the mass of the moving system can be kept constant.

(2)

.....

.....

.....

.....

(iii) Explain how the student could improve the procedure to compensate for the effects of frictional forces acting on the trolley.

(2)

.....

.....

.....

.....

(Total for question = 6 marks)

Mark Scheme

Q1.

Question number	Indicative content	Mark
	Answers will be credited according to candidate's deployment of knowledge and understanding of the material in relation to the qualities and skills outlined in the generic mark scheme. The indicative content below is not prescriptive and candidates are not required to include all the material which is indicated as relevant. Additional content included in the response must be scientific and relevant. AO1 isolated statements • weights on hanger • weights added to trolley • light gate(s) / ticker(tape) timer / ultrasonic transducer • datalogger • (interrupter) card on trolley • sloping runway • weigh trolley • use newtonmeter • use a = (v-u)/t • measure distance and time • use stopclock and ruler • use (average) speed = distance / time • use a = $(v^2-u^2)/2s$ • plot graph of F against a	**(6)** **AO1**

	detail of procedure • suspend weights from weight hanger to produce force • changing weights on hanger • keeping mass constant by moving weights between hanger and trolley • light gates/ticker(tape) timer/ultrasonic transducer used to measure acceleration/velocity/time • runway on slope so no (effect of) friction /so trolley rolls at constant speed (with no weights/force) • increase angle of slope to increase force • interrupter card for time through gate • final speed = 2 x average speed	

Level	Mark	Descriptor
	0	No rewardable material.
Level 1	1–2	Demonstrates elements of physics understanding, some of which is inaccurate. Understanding of scientific, enquiry, techniques and procedures lacks detail. (AO1) Presents a description which is not logically ordered and with significant gaps. (AO1)
Level 2	3–4	Demonstrates physics understanding, which is mostly relevant but may include some inaccuracies. Understanding of scientific ideas, enquiry, techniques and procedures is not fully detailed and/or developed. (AO1) Presents a description of the procedure that has a structure which is mostly clear, coherent and logical with minor steps missing. (AO1)
Level 3	5–6	Demonstrates accurate and relevant physics understanding throughout. Understanding of the scientific ideas, enquiry, techniques and procedures is detailed and fully developed. (AO1) Presents a description that has a well-developed structure which is clear, coherent and logical. (AO1)

Level	Mark	Additional Guidance	General additional guidance – the decision within levels e.g. - At each level, as well as content, the scientific coherency of what is stated will help place the answer at the top, or the bottom, of that level.
	0	No rewardable material.	
Level 1	1–2	Additional guidance isolated facts mention at least 2 isolated statements evidence may be seen in the diagram	Possible candidate responses add weights and use light gates
Level 2	3–4	Additional guidance limited procedure 1 detail of procedure **and** mention 1 other isolated statement evidence may be seen in the diagram	Possible candidate responses use light gates to measure acceleration/velocity/time and add weights
Level 3	5–6	Additional guidance detailed procedure 2 details of procedure **and** mention 1 other isolated statement evidence may be seen in the diagram	Possible candidate responses use light gates to measure acceleration/velocity/time and suspend weights from weight hanger to produce force and sloping runway

Q2.

Question number	Indicative content	Mark
*	Answers will be credited according to candidate's deployment of knowledge and understanding of the material in relation to the qualities and skills outlined in the generic mark scheme. The indicative content below is not prescriptive, and candidates are not required to include all the material which is indicated as relevant. Additional content included in the response must be scientific and relevant. **measurement of distance using a rule or similar to find** • height of the ramp • travelled length of ramp / distance x to Y • width of card (if used) • distance between light gates (if used) • distance between dots on tape (if used) **measurement of time such as** • use of ticker-tape • use of a single light gate connected to electronic timer with a card fixed to the trolley • use of two light gates connected to electronic timer with a means of interrupting the light beams • use of (manually operated) stop clock /watch / timer	**6** **AO1.2**
	determination of speed • detail about which distance and time measurements are being used • repeat and average • repeat using different heights of the ramp	

Level	Mark	Descriptor
	0	• No rewardable material.
Level 1	1-2	• Demonstrates elements of physics understanding, some of which is inaccurate. Understanding of scientific, enquiry, techniques and procedures lacks detail. (AO1) • Presents a description which is not logically ordered and with significant gaps. (AO1)
Level 2	3-4	• Demonstrates physics understanding, which is mostly relevant but may include some inaccuracies. Understanding of scientific ideas, enquiry, techniques and procedures is not fully detailed and/or developed. (AO1) • Presents a description of the procedure that has a structure which is mostly clear, coherent and logical with minor steps missing. (AO1)
Level 3	5-6	• Demonstrates accurate and relevant physics understanding throughout. Understanding of the scientific ideas, enquiry, techniques and procedures is detailed and fully developed. (AO1) • Presents a description that has a well-developed structure which is clear, coherent and logical. (AO1)

Level	**Mark**	**Additional Guidance**	**General additional guidance – the decision within levels** e.g. - At each level, as well as content, the scientific coherency of what is stated will help place the answer at the top, or the bottom, of that level.
	0	No rewardable material.	
Level 1	1–2	Additional guidance Limited description of measurement of distance and time	Possible candidate responses Measure the distance down the ramp. determine the time it took.
Level 2	3–4	Additional guidance Partial description including **two** from measurement of a relevant distance measurement of relevant time calculation of speed	Possible candidate responses Use the light gates to measure the time it took to go down. Measure the distance down the ramp with a ruler.
Level 3	5–6	Additional guidance Detailed description of measurements of relevant distances and associated times to find speed	Possible candidate responses Use light gates to measure the time to go from X to Y Use a ruler to measure the distance between the light gates. Divide distance between the light gates by the time taken to travel from X to Y.

Q3.

Question number	Answer	Additional guidance	Mark
	A description to include: measurement of (relevant) distance (1) measurement of (relevant) time (1) use of speed = $\frac{\text{distance}}{\text{time}}$ (1) detail (1)	 one of distance down slope or distance along bench or length of toy car/card 'record the distance the car travels and time it' scores 2 marks for example: speed down slope × 2 mark distance along bench use a light gate speed gun at the bottom of the slope repeating AND averaging	**(4)**

Q4.

Question Number	Answer	Additional guidance	Mark
	a description to include 3 points from: • measure a distance (at the bottom) / use mark(er)s (certain distance apart) (1) • starting timer (at first mark(er)) (1) • stopping timer (at 2nd mark(er)) OR measures a time (interval) (1) • (use speed) = distance/time (1)	use a light gate (or equivalent sensors idea) not over whole slope for this mark point use of video / (speed) camera /interrupts the light beam accept any time measured for this mp including data logger OR timer / stopwatch	**(3)** AO 2 2

Q5.

Question Number	Answer	Additional guidance	Mark
(i)	a description to include: add weight / mass (1) to the weight hanger (1)	ignore references to friction here by inclining runway allow (component of) gravity to act on trolley	**(2)** AO 1 2

Question Number	Answer	Additional guidance	Mark
(ii)	a description to include: transfer mass (1) between trolley and hanger (1)	 allow weight(s) for mass mass removed from trolley = mass added to hanger for 2 marks	**(2)** AO 1 2

Question Number	Answer	Additional guidance	Mark
(iii)	an explanation that links: raise one end of the runway (1) (so that) trolley (not attached to weight hanger) rolls at constant speed / just starts to move / (force of) gravity (on the trolley) balances forces of friction (1)	 credit methods for reducing friction directly (e.g. oil wheels, runway etc.) to reduce (effects of) friction allow credit for identifying magnitude of frictional forces and subtracting or using graph	**(2)** AO 3 3b