Name: _____

Investigating waves

core practical

Date:

Time:

Total marks available: 18

Total marks achieved: _____

Questions

Q1.

Ripples travel out from the centre of a small circular pond to its edge.

(i) Describe how a student could determine the wave speed of the ripples.

(3)

.....

.....

.....

.....

.....

.....

(ii) Figure 11 shows a duck floating on the pond.

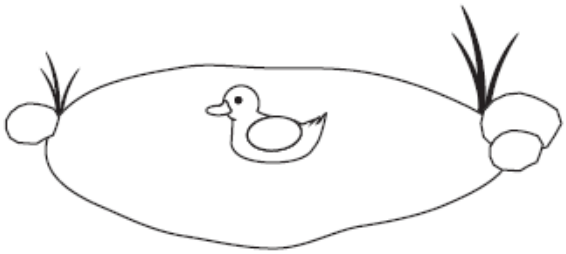

Figure 11

The ripples cause the duck to move.

Draw arrows on Figure 11 to show how the duck moves due to the ripples.

(1)

(Total for question = 4 marks)

Q2.

* A teacher takes a group of students on to a sports field to measure the speed of sound in air.

The teacher fires a starting pistol.
It produces a loud bang and a flash of light at the same time.
The students take measurements.

Describe how the measurements are made and used to determine the speed of sound in air.

You may draw a labelled diagram to help with your answer.

(6)

.....

.....

.....

.....

.....

.....

.....

.....

.....

.....

.....

.....

(Total for question = 6 marks)

Q3.

Figure 8 shows a ripple tank.

A screen is placed below the ripple tank.

The wave pattern produced by the ripples can be seen on the screen.

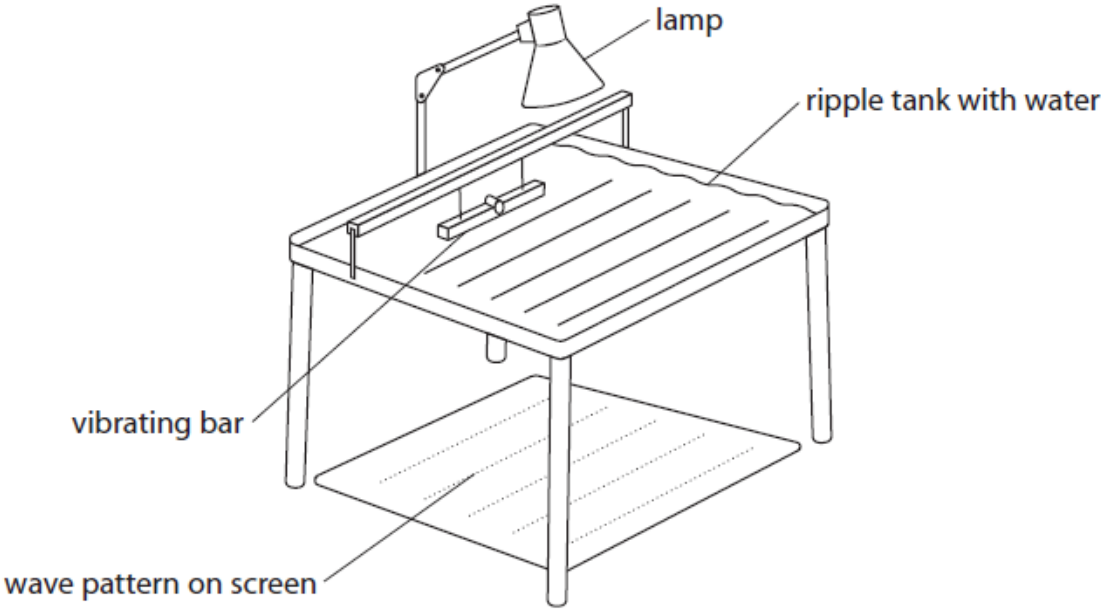

Figure 8

A student has a stop clock and a ruler.

(i) Describe how the student could measure the frequency of the ripples.

(2)

.....

.....

.....

.....

(ii) Describe how the student could measure the wavelength of the ripples.

(2)

.....

.....

.....

.....

(Total for question = 4 marks)

Q4.

A man throws a stone into a pond.

Devise a method of measuring the frequency of the waves.

(2)

.....

.....

.....

.....

(Total for question = 2 marks)

Q5.

Figure 2 shows water waves spreading out from a source.

A student measures the wavelength of the waves.

He uses a ruler to measure the distance from one crest to the next crest.

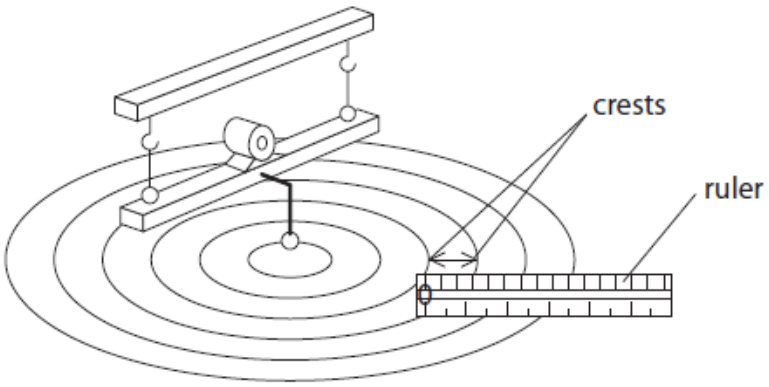

Figure 2

Explain how to improve the student's method for measuring the wavelength.

(2)

.....

.....

.....

.....

(Total for question = 2 marks)

Mark Scheme

Q1.

Question number	Answer	Additional guidance	Mark
(i)	a description to include: use (wave) speed = $\frac{\text{distance}}{\text{time}}$ (1) find relevant time (1) measure specified distance (1)	 use v = f x λ count number of waves in specified time width / radius / circumference of pond do not accept wavelength	**3** **AO2.2**

Question number	Answer	Additional guidance	Mark
(ii)	arrow(s) up and/or down (1) 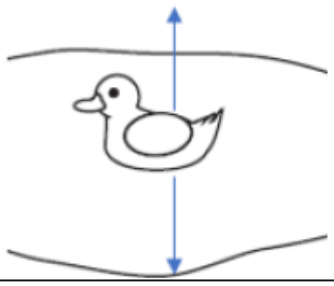	judge by eye need not be on duck do not credit answers that imply duck (also) moves horizontally	**1** **AO1.1**

Q2.

Question number	Answer	Mark
*	Answers will be credited according to candidate's deployment of knowledge and understanding of the material in relation to the qualities and skills outlined in the generic mark scheme. The indicative (example) content below is not prescriptive and candidates are not required to include all the material which is indicated as relevant. Additional content included in the response must be scientific and relevant. **AO1 (6 marks)** • large distance between pistol and timer • distance about 300 m • measure distance with trundle wheel / using GPS / mobile phone • measure time between seeing flash and hearing bang • measure time with stop watch • start watch on seeing flash, stop on hearing bang • determine the speed of sound by dividing the distance between the source and the observer by the time difference between the flash and the bang • repeat OR have several students timing the same event • repeat from different directions to take account of wind direction	**(6)**

Level	Mark	Descriptor
	0	No awardable content.
Level 1	1–2	Demonstrates elements of physics understanding, some of which is inaccurate. Understanding of scientific, enquiry, techniques and procedures lacks detail. (AO1) Presents a description which is not logically ordered and with significant gaps. (AO1)
Level 2	3–4	Demonstrates physics understanding, which is mostly relevant but may include some inaccuracies. Understanding of scientific ideas, enquiry, techniques and procedures is not fully detailed and/or developed. (AO1) Presents a description of the procedure that has a structure which is mostly clear, coherent and logical with minor steps missing. (AO1)
Level 3	5–6	Demonstrates accurate and relevant physics understanding throughout. Understanding of the scientific ideas, enquiry, techniques and procedures is detailed and fully developed. (AO1) Presents a description that has a well-developed structure which is clear, coherent and logical. (AO1)

Q3.

Question Number	Answer	Additional guidance	Mark
(i)	a description including count the number of waves/ripples (1) (that pass a point) in a certain time (1) OR measure the time for a certain number of waves/ripples (1) use of f = 1/T (1)	accept use of numerical values calculate the number of waves that pass the point in a second scores 2 marks	(2) AO1

Question Number	Answer	Additional guidance	Mark
(ii)	a description including any two from the waves/ripples are made to look stationary (1) measure the distance across a number of waves/wave fronts/ripples (1) calculate the wavelength from the measurements (1)	using camera, video, strobe light, stroboscope, mobile, phone, photo(graph) accept measure the distance across a number of lines divide distance by the number of waves/ripples accept the idea of measuring the distance between one wave/ripple/line and another (successive) wave/ripple/line for 2 marks	(2) AO1

Q4.

Question number	Answer	Additional guidance	Mark
	An answer that combines the following points to provide a method: • use a stop watch (1) • count number of waves that reach the bank in a given time (1)		**(2)**

Q5.

Question Number	Answer	Additional guidance	Mark
	an explanation linking:		**(2)**
	• measure across more than one (wavelength) (1)	use a more accurate device (finer divisions) use a camera / picture/strobe(light) (so the waves are not moving)	AO 3 3b
	• divide by the number of wavelengths (1)	count the number of wavelengths must be talking about **measuring**, NOT changing the wavelength etc.	