Core practical – Investigating acceleration

Pearson Edexcel GCSE (9-1) Combined Science / Physics

Name _____ **Class** _____ **Date** _____

Practical Objective

To investigate the effect of mass on the acceleration of a trolley.

Apparatus

- trolley
- ramp
- blocks to prop up the end of the ramp
- string
- pulley
- masses
- sticky tape
- card
- sticky putty
- balance
- two light gates
- datalogger
- two clamps and stands
- box of crumpled newspaper

Safety

- Make sure masses cannot fall on your feet by placing a box of crumpled newspaper on the floor beneath them.

Your teacher may watch to see if you can:

- follow instructions safely.
- take careful measurements.

Method

A Prop up one end of the ramp and place a trolley on it. Adjust the slope of the ramp until the trolley just starts to move on its own. Gravity pulling the trolley down the slope is now slightly greater than the friction in the trolley's wheels.

B Stick a piece of card to the top of the trolley using sticky putty. Leave enough space to stack some masses on top of the trolley. Measure the length of the card and write it down.

C Find the mass of the trolley and write it down.

D Fasten the pulley at the bottom end of the ramp, and arrange the string and masses as shown in the diagram.

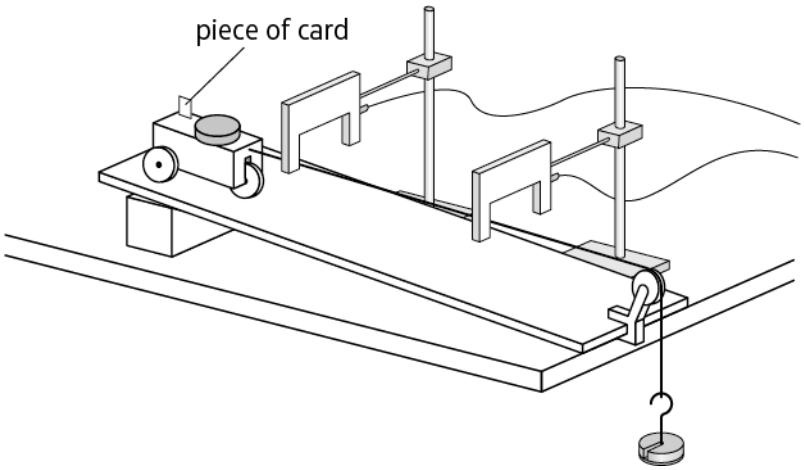

© Pearson Education Ltd 2024. Copying permitted for purchasing institution only. This material is not copyright free.

E Set up two light gates, one near the top of the ramp and one near the bottom.

Adjust their positions so that the card on the top of the trolley passes through each gate as it runs down the ramp.

F Put a mass on the end of the string. You will keep this mass the same for all your tests. You will have to decide what mass to use.

G Release the trolley from the top of the ramp and write down the speed of the trolley (from the datalogger) as it passes through each light gate. Also write down the time it takes for the trolley to go from one light gate to the other.

H Repeat step **G** for other masses on the trolley. You will have to decide what masses to use, how many different masses you are going to test, and whether you need to repeat any of your tests.

Prediction

1 You will accelerate a trolley using a constant force. What effect do you think the mass of the trolley will have on the acceleration? Explain your prediction if you can. Record your prediction and ideas in the box below.

_____

_____

Recording your results

2 Record your results in the table below.

Mass added to trolley (kg)	Total mass of trolley and masses (kg)	Run number	*u* – 1st velocity reading (m/s)	*v* – 2nd velocity reading (m/s)	Time between velocity and measurements (s)	Acceleration (m/s^2)
		1				
		2				
		3				
		Mean				

3 Calculate the acceleration for each run using the equation in the box.

4 Find the mean acceleration for each trolley mass.

You will need to recall and apply this equation in the exam.

$$\text{acceleration} = \frac{\text{change in velocity}}{\text{time}}$$

$$a = \frac{(v - u)}{t}$$

© Pearson Education Ltd 2024. Copying permitted for purchasing institution only. This material is not copyright free.

Considering your results

5 Plot a graph to show your results. Put the total mass of the trolley on the horizontal axis and the acceleration on the vertical axis, as shown in the diagram. Draw a line or curve of best fit through your points, and identify any of your results that are anomalous.

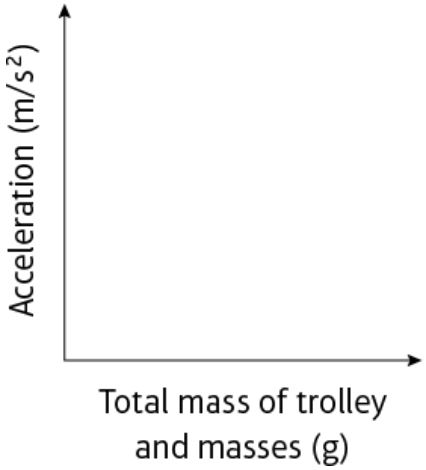

6 **a** What relationship between acceleration and mass does your graph show?

_____

_____

_____

b Is this what you predicted?

_____

_____

_____

© Pearson Education Ltd 2024. Copying permitted for purchasing institution only. This material is not copyright free.

Evaluation

7 **a** How close are the points on your graph to the line of best fit? Comment on any of your results that are anomalous.

_____

_____

_____

b What does this tell you about the quality of the data you have gathered?

_____

_____

_____

8 How do your results compare to the results obtained by other groups?

_____

_____

_____

_____

9 How certain are you that your conclusion is correct? Explain your answer.

_____

_____

_____

_____

© Pearson Education Ltd 2024. Copying permitted for purchasing institution only. This material is not copyright free.